Repair Manual
BMW R 60/7 – R 100 RS

BMW AG Sparte Motorrad
Service Department

Workshop Manual

BMW R 60/7
R 75/7
R 80/7
R 100/7
R 100 T
R 100
R 100 S
R 100 CS
R 100 RT
R 100 RS

IS

3
5
7
9
11
13
15
16
17

Table of contents

section	chapter	Page
00	Maintenance and general hints	00 – 0/1
	Introduction	00 – 0/3
11	Engine	11 – 0/1
12	Engine-Electrical	12 – 0/1
13	Fuel supply and adjustments	13 – 0/1
16	Fuel tank and lines	16 – 0/1
18	Exhaust system	18 – 0/1
21	Clutch	21 – 0/1
23	Transmission	23 – 0/1
26	Drive shaft	26 – 0/1
31	Front fork	31 – 0/1
32	Steering	32 – 0/1
33	rear wheel drive	33 – 0/1
34	Brakes	34 – 0/1
35	Pedal assembly	35 – 0/1
36	Wheels and tyres	36 – 0/1
46	Frame	46 – 0/1
51	Equipment	51 – 0/1
52	Dual seat	52 – 0/1
61	General electrics	61 – 0/1
62	Instruments	62 – 0/1
63	Lights	63 – 0/1

00 Maintenance and general instructions

Introduction ..... Page 00-0/ 3
Tightening torques to BMW and DIN standards 00-0/ 5
Bolts and nuts, DIN standards and strength categories 00-0/ 7
Summary of tightening torques 00-0/ 9
Conversion and comparison table for statutory units of measurement 00-0/11
Determining engine oil and fuel consumption 00-0/13
Engine oil viscosity chart 00-0/15
Conversion Table 00-0/16
Engine oil circuit 00-0/17

INTRODUCTION

This workshop manual is intended to assist you in performing all the necessary repair and maintenance work on the motorcycle correctly. It should be made available to workshop personnel as a means of adding to the practical and theoretical knowledge they have received at the BMW Service Training School. Regular reference to this manual whenever necessary should make even higher service quality possible.

The numerical layout of the workshop manual is in accordance with the main motorcycle component and assembly group system, from 00 to 99, as used in the Flat Rate Manual.

Example of page numbering system:

33 - 10 / 2

Main group | Sub-group | page-number within sub-group

Specifications are provided at the start of each main group.

The special tools needed for correct and efficient repair work are summarized in the Service Information "Service Promotion, Group. Equipment Advisory", No. 0 16 80 (143R) and its supplements. Use of the special tools for the various operations is illustrated together with the descriptive text in this manual.

Note that the text always describes removal work in full. If installation by following the same work procedure in reverse is not possible, a note is provided.

Supplements to this manual include additions and alterations. A sheet marked "Alteration" is a substitute for and existing sheet and should be filed in its place. A sheet marked "Addition" is new, and should be added to the manual at the correct point.

If technical modifications make it necessary to duplicate repair jobs under the same number, the second repair procedure with the identical number is printed on coloured paper and filed as an addition to the manual.

When necessary, repair instructions will also be published as Service Information. Such instructions are automatically included in the next supplement to the workshop manual. As an additional source of information, you are recommended to refer to the illustrated Parts Service microfilms.

BMW Motorrad GmbH + Co.
Service Department (Technical)

All rights reserved. Not to be reproduced, translated or duplicated wholly or in part without written permission.
Subject to technical modifications, errors and omissions excepted.
Published by BMW Motorrad GmbH + Co.

Printed in Western Germany

Tightening torques and preload forces

Applicable only to bolts in accordance with DIN 912, 931, 933, 960, 961, 6912 and nuts with a nut height of 0.8 x d in accordance with DIN 934 and exclusively for μ ges = 0.14 (Bolts phosphate treated, nuts without aftertreatment or galvanized. Lubricated condition: either non-lubricated or oiled.)

For cadmium plated bolts or nuts (μ ges $\approx$ 0.08 to 0.09) the tightening torque must be – 30% less than in the table with the same utilization factor of the bolt material.

Not applicable when another surface or lubricated condition of the thread is used or if there is a variation in the nut height. In such cases it is necessary to determine the values separately.

Not applicable to bolts with expansion shanks, self-locking screw connections as well as screw connections of parts made of different materials. The utilization factor of the bolt in the case of a standard metric thread is:

$$\sigma_{red} - 0.09 \cdot \sigma_{0.2}$$

Thread	Tightening torque M_A mkp / ft. lb						Preload force P v kp / lb					
	Strength rating as per DIN 267						Strength rating as per DIN 267					
	5.6	6.8	6.9	8.8	10.9	12.9	5.6	6.8	6.9	8.8	10.9	12.9
M 6	0.4 +0.1 2.9 +0.7	0.6 +0.1 4.3 +0.7	0.7 +0.1 5 +0.7	0.9 +0.1 6.5 +0.7	1.2 +0.2 8.7 +1.4	1.5 +0.2 10.8 +1.4	425 937	600 1323	685 1510	855 1885	1210 2668	1440 3175
M 8	1.0 +0.1 7.25 +0.7	1.6 +0.2 11.6 +1.4	1.8 +0.2 13 +1.4	2.2 +0.2 16 +1.4	3.0 +0.3 21.7 +2.2	3.6 +0.4 26 +2.9	740 1631	1190 2624	1330 2932	1570 3462	2170 4785	2630 5799
M 10	2.0 +0.2 14.5 +1.4	3.2 +0.4 23.1 +2.9	3.6 +0.4 26 +2.9	4.3 +0.5 29 +3.6	6.0 +0.7 43.4 +5	7.3 +0.8 52.8 +5.8	1160 2558	1880 4145	2090 4608	2500 5512	3480 7673	4200 9261
M 20 x 1.5	1.0 +0.1 7.2 +0.7	1.0 +0.2 7.2 +1.4	1.8 +0.2 13 +1.4	2.2 +0.2 16 +1.4	3.0 +0.3 21.7 +2.2	3.6 +0.4 26 +2.9	740 1631	1190 2624	1330 2932	1610 3550	2200 4851	2670 5887
M 8 x 1	2.0 +0.2 14.5 +1.4	3.2 +0.4 23.1 +2.9	3.6 +0.4 26 +2.9	4.3 +0.5 29 +3.6	6.0 +0.7 43.4 +5	7.3 +0.8 52.8 +5.8	1160 2558	1900 4189	2120 4674	2520 5556	3530 7784	4250 9371
M 10 x 1.25	3.4 +0.4 24.6 +2.9	5.4 +0.6 39 +4.3	6.1 +0.7 44.1 +5	7.2 +0.8 52 +5.8	10.3 +1 74.5 +7.2	12.0 +1.5 86.7 +10.8	1720 3792	2710 5975	3070 6769	3610 7960	5100 11245	6090 13428
M 12 x 1.25	3.4 +0.4 24.6 +2.9	5.4 +0.6 39 +4.3	6.1 +0.7 44.1 +5	7.2 +0.8 52 +5.8	10.3 +1 74.5 +7.2	12.0 +1.5 86.7 +10.8	1690 3726	2670 5887	3030 6681	3570 7872	5040 11113	6000 13230
M 12 x 1.5	5.4 +0.6 39 +4.3	8.6 +1 62.2 +7.2	9.8 +1 71 +7.2	11.5 +1.5 83 +10.8	16.0 +2 115.7 +14.5	20 +2 144.6 +14.5	2330 5137	3720 8202	4180 9217	5030 11091	6970 15369	8510 18764
M 14 x 1.5	8.3 +1 60.0 +7.2	13.5 +1.5 97.6 +10.8	15.5 +1.5 112 +10.8	18.0 +2 130 +14.5	25 +3 180.7 +22	30.0 +4 217 +29	3240 7144	5190 11444	5840 12877	6920 15258	9710 21410	11770 25953
M 16 x 1.5	11.0 +1.5 19.5 +10.8	18.0 +2 130 +14.5	20.0 +2.5 144.6 +18	24.0 +3 173.5 +22	34.0 +4 246 +29	40.0 +5 289 +36	3890 8577	6240 13759	7020 15479	8380 18478	11800 26019	13960 30782
M 18 x 1.5	16.0 +2 115.7 +14.5	26.0 +3 188 +22	29.0 +3.5 210 +25	34.0 +4 246 +29	49.0 +5 354 +36	59.0 +6 426.6 +43.4	5070 11179	8170 18015	9180 20242	10680 23549	15200 33516	18250 40159

The values stipulated in the table apply to a screw connection which corresponds to the above conditions. The tightening torque including tolerance is only given on the layout or assembly drawing if

a) a value different from the Standard sheet is necessary for operational reasons,
b) the strength rating of the bolt and nut is not evident.

Note: All deviations from this table have been taken into account in the technical data

A BMW Standard regarding tightening and test torques for screw connections with self-locking nuts as per DIN 985 and BMW N 113 48.0 is being prepared.

Tightening torques

for self-locking nuts

BMW N 113 49.0

Applicable only to nuts in accordance with BMW N 113 48.0 and DIN 985.

Surface condition: Bolt phosphate treated or galvanized, nut galvanized and not waxed.
Lubricated condition of bolt: either non-lubricated or lightly oiled.

For cadmium plated bolts or nuts the tightening torque, with the same utilization factor of the bolt material, must be ≈ 30% less than the value in the table.

Not applicable in the case of another surface or lubricated condition of the thread, a strength rating of the bolt of less than 8.8 (e. g. 6.9) in conjunction with expansion bolts.

In such cases it is necessary to determine the values separately.

Thread	Tightening torque M_A mkp / ft. lb					
	Nuts as per BMW N 113 48.0 Strength rating			Nuts as per DIN 985 Strength rating		
	8	10	12	8	10	12
M 6	1.1+0.1 7.9+0.7	1.5+0.2 10.8+1.4	1.8+0.2 13.0+1.4	1.0+0.1 7.2+0.7	1.3+0.2 9.4+1.4	1.6+0.2 11.6+1.4
M 8 M 8 x 1	2.5+0.3 18.0+2.2	3.4+0.4 24.6+2.9	4.0+0.5 29.0+3.6	2.5+0.2 18.0+1.4	3.3+0.3 24.0+2.2	3.9+0.4 28.2+2.5
M 10 M 10 x 1.25	35.4+0.5 4.9+3.6	6.8+0.8 49.0+5.8	8.0+0.9 57.8+6.5	4.7+0.5 34.0+3.6	6.4+0.7 46.3+5	7.7+0.8 55.7+5.8
M 12 M 12 x 1.5	8.1+0.9 58.5+6.5	11.4+1.3 82.4+9.4	13.5+1.5 97.6+10.8	7.8+0.8 56.4+5.8	10.9+1 78.8+7.2	12.6+1.5 91.0+10.8
M 14 M 14 x 1.5	13.0+1.5 94.0+10.8	18.0+2 130.0+14.5	22.0+2 159.0+14.5	12.7+1.5 92.0+10.8	17.0+2 123.0+14.5	21.0+2 152.0+14.5
M 16 M 16 x 1.5	22.5+2 162.7+14.5	28.0+3 202.0+22	33.0+4 238.6+29	19.5+2 141.0+14.5	26.0+3 188.0+22	31.0+4 224.0+29
M 18 M 18 x 1.5	27.0+3 195.0+22	38.0+4 274.7+29	44.0+5 318.0+36	26.0+3 188.0+22	36.0+4 260.0+29	42.0+5 303.6+36

The respective preload forces Pv (kp/lb), according to the individual strength ratings, can be taken from the table "Tightening torques and preload forces" in BMW N 600 02.0.

The values stipulated in the table apply to a screw connection which corresponds to the above mentioned conditions. The tightening torque including tolerance is only given on the layout or assembly drawing if a value different from the Standard sheet is necessary for operational reasons.

In the case of a screw connection which is highly stressed dynamically an exact examination by means of calculations and tests is essential.

BMW N 600 02.0

Bolts and Screws

Description	Head shape	DIN No.	Strength rating
Hexagon bolts		931 933 960 961 70614	8.8 10.9 12.9
		561	8.8
Cheese-head screws		84	4.8 8.8
		912 6912	8.8 10.9
Button-headed screws		7986	4.8
Carriage bolts		603	4.6 8.8
Countersunk screws		63	4.8 8.8
		7987	4.8 8.8
Oval-head screws		920 921	5.6[4]
		7985	4.8
Oval-head countersunk screws		91	4.8 8.8
		7988	4.8
Cheese-head self-tapping screws		7971	[1]
Hexagon self-tapping screws		7976	[1]

Description	Head shape	DIN No.	Strength rating
Countersunk self-tapping screws		7982	[1]
Oval-head self-tapping screws		7981	[1]
Oval-head countersunk self-tapping screws		7983	[1]
Stud bolts	–	833 835 836 838 939 940	8.8
Threaded pins		417 551 553	[2] [4]
		438	4.8[4]
Shoulder studs		427	5.8
Winged screws		316	4.6
Screw plugs		906 908	4.6
		910 7604	5.6[4]
Hollow screws		7623 71436	6.8
Cap screws		3871	5.6[4]
Slotted plugs		71022	5.6[4]

Nuts

Description	shape	DIN No.	Strength rating
Hexagon nuts		439	[5]
		985	8 10[4]
		934	[3]
		936	6G 8G
		70615 70616	8/10[4] 6G/8G[4]
Castellated nuts		935 937	8/10 6S/8G
Wing nuts		315	GTS

Description	shape	DIN No.	Strength rating
Square nuts		557	5–2
		562	4D–2
Cap nuts		986	8[4]
		1587	6–2
Slotted nuts		70851 70852	6G[4]
Screw caps		3870 7606	5D–2[4]
Knurled nuts		466 467	5–2
Ball collar nuts Flat collar nuts		74361	8/10

[1] Case hardened steel, tempered file-hard, depth of case 0.1 . . . 0.2 mm (0.004 . . . 0.008")
[2] up to M 10: 4.8, from M 12: 4.6
[3] up to M 4: 5–2, from M 5: 8 and 10
[4] The stipulated strength characteristics deviate from the DIN specification
[5] up to M 8: 4D-2, for M 10: 5S-2

Summary of tightening torques for R 60/7 . . . R 100 RS in Nm (lb.ft)

	Nm	lb.ft
Engine		
Cylinder head nuts (in 3 stages)	15	11
	25	18.5
	35 +4	26 + 3
Big end bolts	50 ± 2	(37 ± 1.5)
Clutch housing (flywheel)	100 + 5	74 + 3.7
Nut for valve adjusting screw	20 ± 2	14.7 ± 1.5
Threaded stub pipe for carburettor connection	50	37
Oil drain plug	30 + 5	22 + 3.7
Engine electrical system		
Alternator armature retaining bolt	25 ± 2	18.4 ± 1.5
Spark plugs	20 + 5	14.7 + 3.7
Exhaust system		
Star nuts for exhaust pipes	200 +20	147 + 15
Clutch		
Clutch housing cover	20 + 2	14.7 + 1.5
Gearbox		
Attachment to engine	33	24.3
Bearing mount	19	14
Output flange at gearbox output shaft	221.5	163
Gearbox cover to gearbox housing	8	5.9
Nut (cotter pin) for kick starter lever	22.5	16.6
Oil filler plug	31	22.9
Oil drain plug	26	19.2
Drive shaft		
Twelve-sided bolts	40	29.5
Front forks		
Fork bridge clamp bolts	40	29.5
Damper retaining bolt at slider tube	35	25.8
Upper spring support	120	88
Oil filler plugs	9	6.6
Oil drain plugs	8	5.9
Steering		
Cap nut for steering bearing	120	88
Slotted nut	Free from play	

n and comparison table for statutory units of measurement

Unit symbols old	Unit symbols new	Values		
m	m	1 m = 1000 mm	1 km = 1000 m	1 μm = 0.001 mm
m^2 sq.m	m^2	1 m^2 = 10^6 mm^2	1 mm^2 = 0.01 cm^2	
m^3 cu.m	m^3	1 m^3 = 10^6 cm^3	1 dm^3 = 0.001 m^3	
l	l	1 l = 1 dm^3		
	.rad	1 rad = 1 m/m = 57	1 = π/180 rad	
$(°)^2$	sr	1 sr = 1 m^2/m^2	$(1\ )^2$ = $(\pi 180)^2$ sr	
kg	kg	1 kg = 1000 g	1 g = 1000 mg	1 t = 1 Mg = 1000 kg
kg/m^3	kg/m^3	1 kg/m^3 = 0.001 kg/dm^3		1 kg/dm^3 = 1 kg/l
kgm	kgm	1 kgm = 1000 000 gmm		
sec s	s	1 min = 60 s	1 h = 60 min	
rps rpm	1/s 1/min	1 rpm = 1/min	1/min = 1/(60s)	
m/s	m/s	1 m/s = 3.6 km/h		
m/s^2	m/s^2			
kp	N	1 N = 1 kgm/s^2	1 kp = 9.81 N	
atm kp/cm^2 mWS Torr mmHg	N/m^2 Pa bar	1 atm = 1 kp/cm^2 = 0.981 bar = 98 066.5 Pa 1 m WS = 9 806.65 Pa = 9 806.65 N/cm^2 1 Torr = 1.333 224 mbar 1 mmHg = 133.322 Pa = 133.322 N/m^2		
kp/mm^2	N/m^2 Pa N/mm^2	1 N/m^2 = 1 Pa 1 kp/mm^2 = 9.81 N/mm^2		
kpm hp/s cal	J kWh	1 J = 1 Nm 1 cal = 4.1868 J	1 kWh = 3.6 MJ	1 kpm = 9.81 J
kpm	Nm	1 kpm = 9.81 Nm		
hp kpm/s kcal/h	kW Nm/s	1 kW = 1000 W 1 PS = 736 W = 75 kpm/s = 632 kcal/h 1 kW = 1.36 PS = 102 kpm/s = 860 kcal/h = 0.239 kcal/s	1 W = 1 Nm/s = 1 J/s	
P	Pas	1 Pas = 1 Ns/m^2	1 P = 0.1 Pas = 1 g/cms	
St	m^2/s	1 m^2/s = 1 Pas m^3/kg	1 St = 1 cm^2/s = 0.0001 m^2/s	
deg. °C K	°C K	9 °C ≙ 273.15 K 1 grd 1 K = 1 K = 1 °C (temperature difference)		
A	A	1 mA = 0.001 A	1 kA = 1000 A	
V	V	1 V = 1 W/A	1 mV = 0.001 V	1 MV = 10^6 V
Ω	Ω	1 Ω = 1 V/A = 1/S		
M	Wb. Vs	1 Wb = Vs	1 M = 10^{-8} Wb	
G	T	1 T = Wb/m^2	1 G = 10^{-4} T	
Oe	A/m	1 A/m = 1 N/Wb	10 e = $10^3/4\pi$ A/m	
HK	cd	1 cd = 1 107 HK	1 HK = 0.903 342 cd	
sb	cd/m^2	1 sb = 10^4 cd/m^2		
ph	lx	1 ph = 10^4 lx		

Summary of tightening torques for R 60/7 . . . R 100 RS in Nm (ft.lb)

(continued)

	Nm	lb.ft.
Rear wheel drive with swinging fork		
Nut on input pinon	165	122
Threaded ring in axle housing	118	87
Nuts for axle housing cover	17.7	13
Oil level check plug on axle housing	10	7.4
Oil drain plug on axle housing	25.5	18.8
Swinging fork pivot pin	10 + 2	7.4 + 1.5
Oil filler plug on swinging fork	Screwed in but not fully tightened	
Oil drain plug on swinging fork	15.7	11.6
Locknut for swinging fork pivot pin	100 + 20	74 + 15
Damper rod at spring strut lug	38 ± 2	28 ± 1.5
Retaining nuts (twelve-sided) for axle housing at swinging fork		
Spring strut retaining bolts	47	34.7
Brakes		
Brake pipe to master cylinder	35 + 5	25.8 + 3.7
Brake pipe to brake caliper		
Brake pipe to brake hose	8 + 2	5.9 + 1.5
Wheels and tyres		
Wheel bearing friction moment at specified axle nut tightening torque (front wheel)	8 + 2	5.9 + 1.5
Quick-release axle nut	12 + 3	8.8 + 2.2
Axle clamp bolts	0.15 . . . 0.30	0.11 . . . 0.22
	48	35.4
	17	12.5

Conversion and comparison table for statutory units of measurement

Name of unit		Unit symbols old	Unit symbols new	Values		
Length		m	m	1 m = 1000 mm	1 km = 1000 m	1 μm = 0.001 mm
Area		m^2 sq.m	m^2	1 m^2 = 10^6 mm^2	1 mm^2 = 0.01 cm^2	
Volume		m^3 cu.m	m^3	1 m^3 = 10^6 cm^3	1 dm^3 = 0.001 m^3	
		l	l	1 l = 1 dm^3		
Angle	surface	°	°,rad	1 rad = 1 m/m ≈ 57°	1° = π/180 rad	
	spatial	$(°)^2$	sr	1 sr = 1 m^2/m^2	$(1°)^2$ = $(\pi 180)^2$ sr	
Mass		kg	kg	1 kg = 1000 g	1 g = 1000 mg	1 t = 1 Mg = 1000 kg
Density		kg/m^3	kg/m^3	1 kg/m^3 = 0.001 kg/dm^3		1 kg/dm^3 = 1 kg/l
Imbalance		kgm	kgm	1 kgm = 1000 000 gmm		
Time		sec s	s	1 min = 60 s	1 h = 60 min	
Speed of rotation		rps rpm	1/s 1/min	1 rpm = 1/min	1/min = 1/(60s)	
Speed (velocity)		m/s	m/s	1 m/s = 3.6 km/h		
Acceleration		m/s^2	m/s^2			
Force		kp	N	1 N = 1 kgm/s^2	1 kp = 9.81 N	
Pressure (gas, liquid)		atm kp/cm^2 mWS Torr mmHg	N/m^2 Pa bar	1 atm = 1 kp/cm^2 = 0.981 bar = 98 066.5 Pa 1 m WS = 9 806.65 Pa = 9 806.65 N/cm^2 1 Torr = 1.333 224 mbar 1 mmHg = 133.322 Pa = 133.322 N/m^2		
Mechanical stress		kp/mm^2	N/m^2 Pa N/mm^2	1 N/m^2 = 1 Pa 1 kp/mm^2 = 9.81 N/mm^2		
Energy, work, quantity of heat		kpm hp/s cal	J kWh	1 J = 1 Nm 1 cal = 4.1868 J	1 kWh = 3.6 MJ	1 kpm = 9.81 J
Torque		kpm	Nm	1 kpm = 9.81 Nm		
Power output		hp kpm/s kcal/h	kW Nm/s	1 kW = 1000 W 1 PS = 736 W = 75 kpm/s = 632 kcal/h 1 kW = 1.36 PS = 102 kpm/s = 860 kcal/h = 0.239 kcal/s	1 W = 1 Nm/s = 1 J/s	
Viscosity	dynamic	P	Pas	1 Pas = 1 Ns/m^2	1 P = 0.1 Pas = 1 g/cms	
	kinetic	St	m^2/s	1 m^2/s = 1 Pas m^3/kg	1 St = 1 cm^2/s = 0.0001 m^2/s	
Temperature		deg. °C °K	°C K	9° C ≙ 273.15 K 1 grd 1° K = 1 K = 1° C (temperature difference)		
Electric current		A	A	1 mA = 0.001 A	1 kA = 1000 A	
Electric voltage		V	V	1 V = 1 W/A	1 mV = 0.001 V	1 MV = 10^6 V
Electric resistance		Ω	Ω	1 Ω = 1 V/A = 1/S		
Magnetic flux		M	Wb, Vs	1 Wb = Vs	1 M = 10^{-8} Wb	
Magnetic flux density		G	T	1 T = Wb/m^2	1 G = 10^{-4} T	
Magnetic field strength		0e	A/m	1 A/m = 1 N/Wb	10 e = $10^3/4\pi$ A/m	
Light intensity		HK	cd	1 cd = 1.107 HK	1 HK = 0.903 342 cd	
Illumination density		sb	cd/m^2	1 sb = 10^4 cd/m^2		
Illumination intensity		ph	lx	1 ph = 10^4 lx		

Determining oil consumption

Oil consumption can be measured after the motorcycle has covered a distance of approximately 7 500 km (5 000 miles). This distance is necessary for oil consumption to stabilize.
The engine must not exhibit any oil leaks.
Drain the engine oil at normal operating temperature.
Renew the filter element.
Add fresh oil to the engine.
Run the motorcycle under normal operating conditions until the oil level has dropped to the lower mark on the dipstick. (Difference between MIN and MAX marks = 0.85 l (1.2 Imp. pints/0.89 US quart).
Consumption can also be determined by draining off the oil.)
Measurement over a distance of 500 – 1 000 km (app. 300 – 600 miles) is always inaccurate, since experience has shown that the first half-liter of oil tends to be consumed more quickly.
Oil consumption should not exceed 0.1 l/100 km (app. 350 Imp. miles/pint, app. 590 US miles/quart).

Possible causes of excessive oil consumption:

1. Running-in not yet completed
2. Leakage past valve guides
3. Consequences of piston seizure
4. Piston rings installed incorrectly, broken or worn
5. Excessive running clearance between valve stems and valve guides.

Determining fuel consumption in accordance with German DIN 70030 standard test method

The carburettor and ignition setting[1]) of the motorcycle must be to standard specification.
The tire sizes must be as stated in the motorcycle's registration documents.
Tire pressures must be corrected if necessary to the specified values.
The brakes must be fully released.
The engine should have covered at least 7 500 km (5 000 miles), and be at normal operating temperature.
During fuel consumption measurement, the motorcycle should carry a weight halfway between its unladen weight and its gross weight limit.
Road speed over the entire test course should be as uniform as possible, and three-quarters of the top speed of which the motorcycle is capable.
The test speed should not, however, exceed 110/km/h (68 mile/h).
The test course should be as flat as possible and dry; a distance of app. 10 km (6 miles) should be covered in each direction. Uphill and downhill gradients not exceeding 1.5% (l in 67) are acceptable.
Air temperature should be between +10 and +30° C (+50 and +86° F), and wind velocity should not exceed 3 m (9.85 ft) /s.
The engine should be supplied with a standard commercially-available grade of fuel (in accordance with the maufacturer's requirements).

Fuel consumption can be determined with a commercial meter or by applying the follwing formula; an allowance of 10% should be added for unfavorable circumstances.

$$\frac{\text{Fuel consumed} \times 100}{\text{Distance in km}} = \text{Fuel consumption by standard test method in l/100 km}$$

(Conversion:

$$\frac{282.47}{\text{Fuel consumption in l/100 km}} = \text{Fuel consumption in Imperial mile/gal}$$

$$\frac{235.2}{\text{Fuel consumption in l/100 km}} = \text{Fuel consumption in US mile/gal)}$$

[1] see Specifications

Engine oil viscosity chart
(Oil grades for use at various outside temperatures)

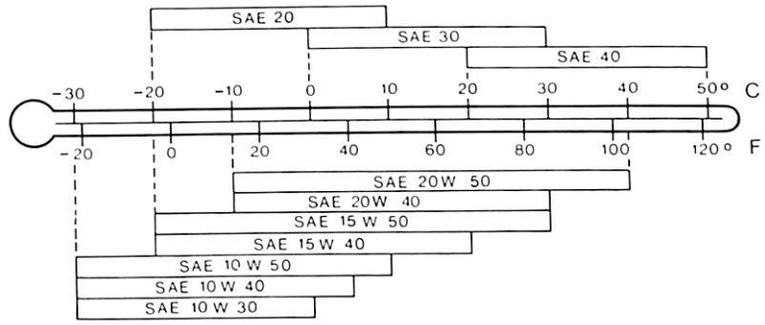

Use only HD engine oil of API SE or SF specifications;
it should be of reputable make and suitable for use in four-stroke spark-ignition engines.

Conversion Table

From Metric System:		To English (F. P. S.) System:		Multiply With Conv. Factor
Millimeters	mm	Inches	in.	0.039
Centimeters	cm	Inches	in.	0.394
Meters	m	Feet	ft.	3.281
Kilometers	km	Miles	mi.	0.621
Kilometers/hour	km/h	Miles/hour	mph	0.621
Square centimeters	cm^2	Square inches	sq. in.	0.155
Cubic centimeters	cm^3, cc	Cubic inches	cu. in.	0.061
Liters	l	US quarts	qt.	1.057
Kilograms	kg	Pounds	lb.	2.205
Newton-meter	Nm	Foot pounds	ft. lb.	0.723
Bar	bar	Pounds/square inch	psi	14.5

From English (F. P. S.) System:		To Metric System:		Multiply With Conv. Factor
Inches	in.	Millimeters	mm	25.40
Inches	in.	Centimeters	cm	2.54
Feet	ft.	Meters	m	0.305
Miles	mi.	Kilometers	km	1.609
Miles/hour	mph	Kilometers/hour	km/h	1.610
Square inches	sq. in.	Square centimeters	cm^2	6.452
Cubic inches	cu. in.	Cubic centimeters	cm^3, cc	16.387
US quarts	qt.	Liters	l	0.946
Pounds	lb.	Kilograms	kg	0.454
Foot pounds	ft. lb.	Newton-meter	Nm	1.383
Pounds/square inch	psi	Bar	bar	0.069

Engine oil circuit

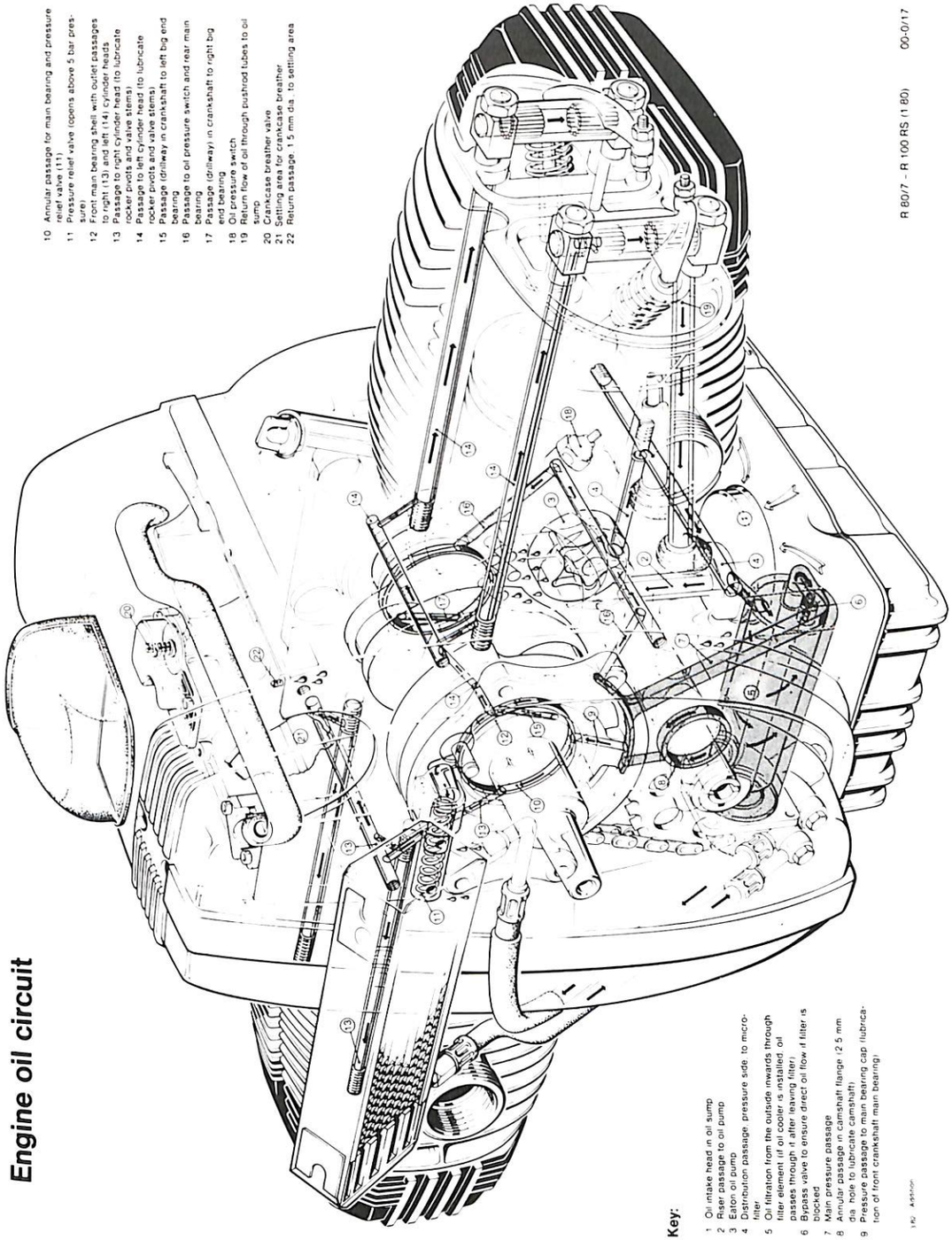

Key:

1 Oil intake head in oil sump
2 Riser passage to oil pump
3 Eaton oil pump
4 Distribution passage: pressure side to micro-filter
5 Oil filtration from the outside inwards through filter element (if oil cooler is installed, oil passes through it after leaving filter)
6 Bypass valve to ensure direct oil flow if filter is blocked
7 Main pressure passage
8 Annular passage in camshaft flange (2.5 mm dia. hole to lubricate camshaft)
9 Pressure passage to main bearing cap (lubrication of front crankshaft main bearing)
10 Annular passage for main bearing and pressure relief valve (11)
11 Pressure relief valve (opens above 5 bar pressure)
12 Front main bearing shell with outlet passages to right (13) and left (14) cylinder heads
13 Passage to right cylinder head (to lubricate rocker pivots and valve stems)
14 Passage to left cylinder head (to lubricate rocker pivots and valve stems)
15 Passage (drilling) in crankshaft to left big end bearing
16 Passage to oil pressure switch and rear main bearing
17 Passage (drilling) in crankshaft to right big end bearing
18 Oil pressure switch
19 Return flow of oil through pushrod tubes to oil sump
20 Crankcase breather valve
21 Setting area for crankcase breather
22 Return passage, 1.5 mm dia. to setting area

Conversion Table

From Metric System:		To English (F. P. S.) System:		Multiply With Conv. Factor
Millimeters	mm	Inches	in.	0.039
Centimeters	cm	Inches	in.	0.394
Meters	m	Feet	ft.	3.281
Kilometers	km	Miles	mi.	0.621
Kilometers/hour	km/h	Miles/hour	mph	0.621
Square centimeters	cm^2	Square inches	sq. in.	0.155
Cubic centimeters	cm^3, cc	Cubic inches	cu. in.	0.061
Liters	l	US quarts	qt.	1.057
Kilograms	kg	Pounds	lb.	2.205
Newton-meter	Nm	Foot pounds	ft. lb.	0.723
Bar	bar	Pounds/square inch	psi	14.5

From English (F. P. S.) System:		To Metric System:		Multiply With Conv. Factor
Inches	in.	Millimeters	mm	25.40
Inches	in.	Centimeters	cm	2.54
Feet	ft.	Meters	m	0.305
Miles	mi.	Kilometers	km	1.609
Miles/hour	mph	Kilimeters/hour	km/h	1.610
Square inches	sq. in.	Square centimeters	cm^2	6.452
Cubic inches	cu. in.	Cubic centimeters	cm^3, cc	16.387
US quarts	qt.	Liters	l	0.946
Pounds	lb.	Kilograms	kg	0.454
Foot pounds	ft. lb.	Newton-meter	Nm	1.383
Pounds/square inch	psi	Bar	bar	0.069

Engine oil circuit

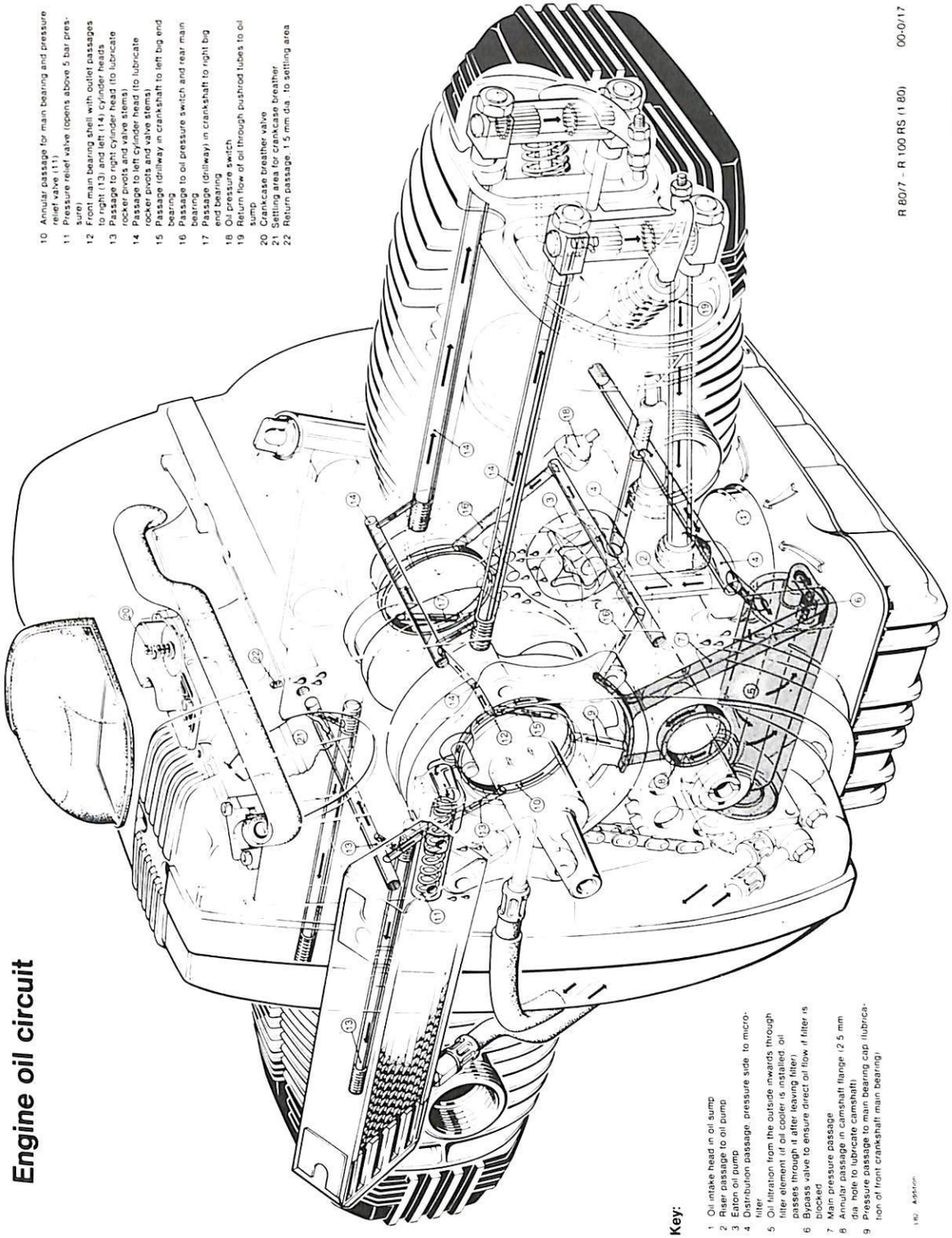

Key:

1 Oil intake head in oil sump
2 Riser passage to oil pump
3 Eaton oil pump
4 Distribution passage, pressure side, to micro-filter
5 Oil filtration from the outside inwards through filter element (if oil cooler is installed, oil passes through it after leaving filter)
6 Bypass valve to ensure direct oil flow if filter is blocked
7 Main pressure passage
8 Annular passage in camshaft flange (2.5 mm dia. hole to lubricate camshaft)
9 Pressure passage to main bearing cap (lubrication of front crankshaft main bearing)
10 Annular passage for main bearing and pressure relief valve (11)
11 Pressure relief valve (opens above 5 bar pressure)
12 Front main bearing shell with outlet passages to right (13) and left (14) cylinder heads
13 Passage to right cylinder head (to lubricate rocker pivots and valve stems)
14 Passage to left cylinder head (to lubricate rocker pivots and valve stems)
15 Passage (drilleway in crankshaft to left big end bearing
16 Passage to oil pressure switch and rear main bearing
17 Passage (drilleway) in crankshaft to right big end bearing
18 Oil pressure switch
19 Return flow of oil through pushrod tubes to oil sump
20 Crankcase breather valve
21 Settling area for crankcase breather
22 Return passage, 1.5 mm dia. to settling area

Engine oil - circuit diagram

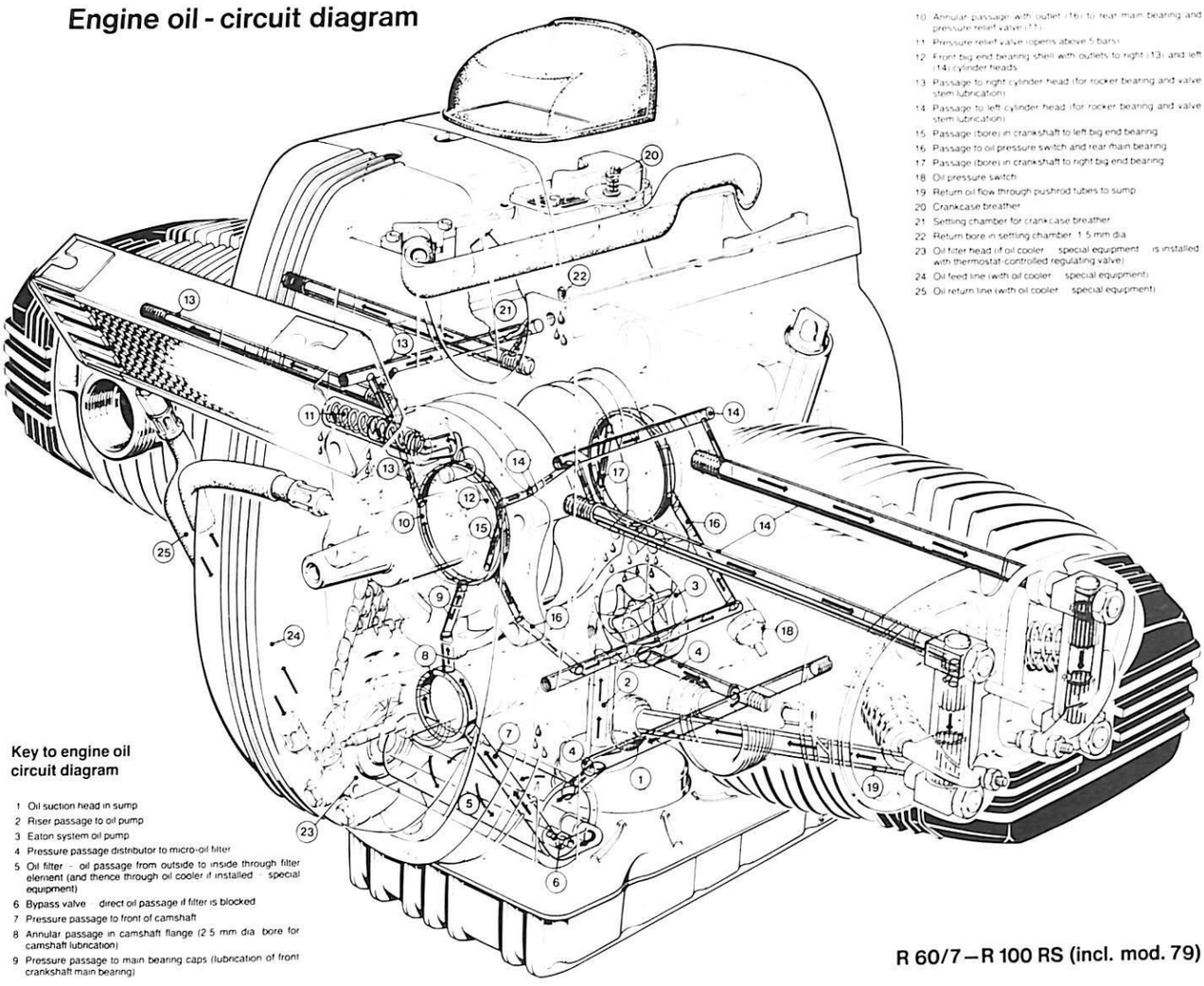

10 Annular passage with outlet (16) to rear main bearing and pressure relief valve (11)
11 Pressure relief valve (opens above 5 bars)
12 Front big end bearing shell with outlets to right (13) and left (14) cylinder heads
13 Passage to right cylinder head (for rocker bearing and valve stem lubrication)
14 Passage to left cylinder head (for rocker bearing and valve stem lubrication)
15 Passage (bore) in crankshaft to left big end bearing
16 Passage to oil pressure switch and rear main bearing
17 Passage (bore) in crankshaft to right big end bearing
18 Oil pressure switch
19 Return oil flow through pushrod tubes to sump
20 Crankcase breather
21 Settling chamber for crankcase breather
22 Return bore in settling chamber 1.5 mm dia
23 Oil filter head (if oil cooler – special equipment – is installed with thermostat-controlled regulating valve)
24 Oil feed line (with oil cooler – special equipment)
25 Oil return line (with oil cooler – special equipment)

Key to engine oil circuit diagram

1 Oil suction head in sump
2 Riser passage to oil pump
3 Eaton system oil pump
4 Pressure passage distributor to micro-oil filter
5 Oil filter – oil passage from outside to inside through filter element (and thence through oil cooler if installed – special equipment)
6 Bypass valve – direct oil passage if filter is blocked
7 Pressure passage to front of camshaft
8 Annular passage in camshaft flange (2.5 mm dia bore for camshaft lubrication)
9 Pressure passage to main bearing caps (lubrication of front crankshaft main bearing)

11 Engine

Specifications		Page 11- 03/3
Specifications - 1979 models		11-0/18
Specifications - 1981 models		11-0/35
11 00 039	Compression test	11-00/1
11 00 050	Engine - removing and installing	11-00/3
11 11 050	Cylinder - removing and installing	11-11/1
11 11 527	Cylinder - reboring and honing	11-11/3
11 12 080	Cylinder head - removing and installing	11-12/1
11 12 513	Cylinder head - stripping, regrinding valves and assembling	11-12/3
11 12 561	Valve guides - renewing	11-12/5
11 12 621	One valve seat ring - renewing	11-12/5
11 14 060	Timing chain cover - detaching and attaching (models with ignition trigger)	11-14/1
11 14 060	Timing chain cover - detaching and attaching (models without ignition trigger)	11-14/1
11 14 151	Radial seal for crankshaft (gearbox end) - renewing	11-14/2
11 14 651	Radial seal for crankshaft (alternator end) - renewing	11-14/3
11 14 671	Radial seal for camshaft - renewing	11-14/3
11 14 691	Radial seal for revolution counter drive - renewing	11-14/3
11 15 101	Engine breather hose - renewing (single-sided breather)	11-15/1
11 15 101	Engine breather hose - renewing (double-sided breather)	11-15/1
11 15 101	Engine breather hose - renewing (1981 models)	11-15/1
11 15 111	Engine breather check valve - renewing	11-15/1
11 21 001	Crankshaft - removing and installing	11-21/1
11 21 531	Main bearing bushings - renewing	11-21/3
11 22 000	Flywheel - removing and installing	11-22/1
11 22 000	Clutch housing (flywheel) - removing and installing (1981 models)	11-22/1
11 24 000	Connecting rod - removing and installing	11-24/1
11 25 000	Piston - removing and installing	11-25/1
11 31 061	Timing chain sprockets - renewing (models without ignition trigger)	11-31/1
11 31 061	Timing chain sprockets - renewing (models with ignition trigger)	11-31/1
11 34 504	Valve clearances - adjusting	11-34/1
11 41 000	Oil pump - removing and installing	11-41/1
11 42 310	Oil cooler - removing and installing	11-42/1

Engine

Technical Data

Model	R 60 7	R 75 7	R 80 7	R 100 7	R 100 S	R 100 RS
Engine design	4 stroke horizontally opposed engine with overhead valves in V configuration					
Location of engine number	on engine block above oil filler pipe					
Cylinder bore mm (in)	73.5 (2.89)	82 (3.23)	84.8 (3.34)	94 (3.70)	94 (3.70)	94 (3.70)
Piston stroke mm (in)	70.6 (2.78)					
Number of cylinders	2					
Cylinder arrangement	opposed					
Stroke bore ratio	0.96	0.86	0.83	0.75	0.75	0.75
Rated cubic capacity cm³ (in³)	595 (36.3)	740 (45.2)	785 (47.9)	971 (59.3)	971 (59.3)	971 (59.3)
Actual cubic capacity cm³ (in³)	599 (36.6)	745 (45.5)	797.5 (48.7)	978 (59.7)	978 (59.7)	978 (59.7)
Compression ratio	9.2:1	9.0:1	9.2:1 * 8.2:1	9.1:1	9.5:1	9.5:1
Maximum useful output DIN kW (hp) at engine speed min⁻¹	29.5 (40) 6400	36.8 (50) 6200	41 (55) 7000 * 37 (50) 7250	44.1 (60) 6500	48 (65) 6600	51.6 (70) 7250
Maximum permissible constant engine speed min⁻¹	6500	6500	7200	6800	7000	7200
Maximum permissible engine speed min⁻¹	7200	7400	7400	7400	7400	7400
Idling speed min⁻¹	800 ... 1100					
Maximum permissible engine speed during running in: up to 1000 km (600 miles) min⁻¹ up to 2000 km (1200 miles) min⁻¹	4000 4500					
Direction of engine rotation	clockwise viewed towards dynamo					
Maximum torque in Nm (mkp, lb. ft) at engine speed min⁻¹	48 (4.9, 35.4) 5000	58.8 (6, 43.4) 5000	62.5 (6.37, 46,1) 5500 * 56.6 (5.76, 41,7) 5500	73.5 (7.4, 54.2) 4000	75 (7.6, 55.3) 5500	76 (7.7, 56.1) 5500

* Low-compression engine for regular fuel
** from frame No 6 007 001, 78 model

Engine oil - circuit diagram

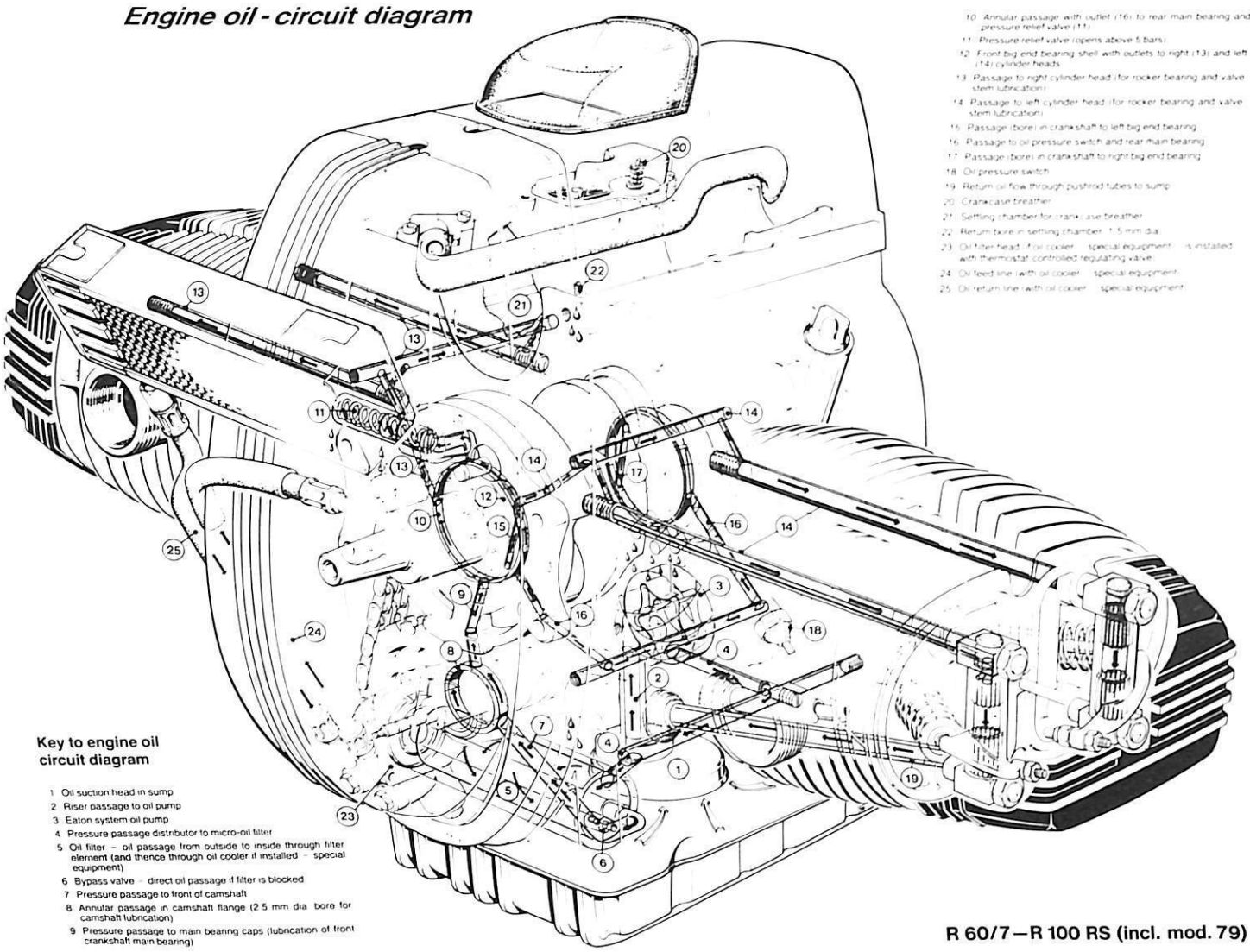

10 Annular passage with outlet (16) to rear main bearing and pressure relief valve (11)
11 Pressure relief valve (opens above 5 bars)
12 Front big end bearing shell with outlets to right (13) and left (14) cylinder heads
13 Passage to right cylinder head (for rocker bearing and valve stem lubrication)
14 Passage to left cylinder head (for rocker bearing and valve stem lubrication)
15 Passage (bore) in crankshaft to left big end bearing
16 Passage to oil pressure switch and rear main bearing
17 Passage (bore) in crankshaft to right big end bearing
18 Oil pressure switch
19 Return oil flow through pushrod tubes to sump
20 Crankcase breather
21 Settling chamber for crankcase breather
22 Return bore in settling chamber 1.5 mm dia
23 Oil filter head (for cooler – special equipment – is installed with thermostat controlled regulating valve)
24 Oil feed line (with oil cooler – special equipment)
25 Oil return line (with oil cooler – special equipment)

Key to engine oil circuit diagram

1 Oil suction head in sump
2 Riser passage to oil pump
3 Eaton system oil pump
4 Pressure passage distributor to micro-oil filter
5 Oil filter – oil passage from outside to inside through filter element (and thence through oil cooler if installed – special equipment)
6 Bypass valve – direct oil passage if filter is blocked
7 Pressure passage to front of camshaft
8 Annular passage in camshaft flange (2.5 mm dia bore for camshaft lubrication)
9 Pressure passage to main bearing caps (lubrication of front crankshaft main bearing)

11 Engine

Specifications		Page 11- 03/3
Specifications - 1979 models		11-0/18
Specifications - 1981 models		11-0/35
11 00 039	Compression test	11-00/1
11 00 050	Engine - removing and installing	11-00/3
11 11 050	Cylinder - removing and installing	11-11/1
11 11 527	Cylinder - reboring and honing	11-11/3
11 12 080	Cylinder head - removing and installing	11-12/1
11 12 513	Cylinder head - stripping, regrinding valves and assembling	11-12/3
11 12 561	Valve guides - renewing	11-12/5
11 12 621	One valve seat ring - renewing	11-12/5
11 14 060	Timing chain cover - detaching and attaching (models with ignition trigger)	11-14/1
11 14 060	Timing chain cover - detaching and attaching (models without ignition trigger)	11-14/1
11 14 151	Radial seal for crankshaft (gearbox end) - renewing	11-14/2
11 14 651	Radial seal for crankshaft (alternator end) - renewing	11-14/3
11 14 671	Radial seal for camshaft - renewing	11-14/3
11 14 691	Radial seal for revolution counter drive - renewing	11-14/3
11 15 101	Engine breather hose - renewing (single-sided breather)	11-15/1
11 15 101	Engine breather hose - renewing (double-sided breather)	11-15/1
11 15 101	Engine breather hose - renewing (1981 models)	11-15/1
11 15 111	Engine breather check valve - renewing	11-15/1
11 21 001	Crankshaft - removing and installing	11-21/1
11 21 531	Main bearing bushings - renewing	11-21/3
11 22 000	Flywheel - removing and installing	11-22/1
11 22 000	Clutch housing (flywheel) - removing and installing (1981 models)	11-22/1
11 24 000	Connecting rod - removing and installing	11-24/1
11 25 000	Piston - removing and installing	11-25/1
11 31 061	Timing chain sprockets - renewing (models without ignition trigger)	11-31/1
11 31 061	Timing chain sprockets - renewing (models with ignition trigger)	11-31/1
11 34 504	Valve clearances - adjusting	11-34/1
11 41 000	Oil pump - removing and installing	11-41/1
11 42 310	Oil cooler - removing and installing	11-42/1

Engine

Technical Data

Model	R 60 7	R 75 7	R 80 7	R 100 7	R 100 S	R 100 RS
Engine design	4 stroke horizontally opposed engine with overhead valves in V configuration					
Location of engine number	on engine block above oil filler pipe					
Cylinder bore mm (in)	73.5 (2.89)	82 (3.23)	84.8 (3.34)	94 (3.70)	94 (3.70)	94 (3.70)
Piston stroke mm (in)	70.6 (2.78)					
Number of cylinders	2					
Cylinder arrangement	opposed					
Stroke bore ratio	0.96	0.86	0.83	0.75	0.75	0.75
Rated cubic capacity cm³ (in³)	595 (36.3)	740 (45.2)	785 (47.9)	971 (59.3)	971 (59.3)	971 (59.3)
Actual cubic capacity cm³ (in³)	599 (36.6)	745 (45.5)	797.5 (48.7)	978 (59.7)	978 (59.7)	978 (59.7)
Compression ratio	9.2:1	9.0:1	9.2:1 * 8.2:1	9.1:1	9.5:1	9.5:1
Maximum useful output DIN kW (hp) at engine speed min⁻¹	29.5 (40) 6400	36.8 (50) 6200	41 (55) 7000 * 37 (50) 7250	44.1 (60) 6500	48 (65) 6600	51.6 (70) 7250
Maximum permissible constant engine speed min⁻¹	6500	6500	7200	6800	7000	7200
Maximum permissible engine speed min⁻¹	7200	7400	7400	7400	7400	7400
Idling speed min⁻¹	800 ... 1100					
Maximum permissible engine speed during running in: up to 1000 km (600 miles) min⁻¹ up to 2000 km (1200 miles) min⁻¹	4000 4500					
Direction of engine rotation	clockwise viewed towards dynamo					
Maximum torque in Nm (mkp, lb. ft) at engine speed min⁻¹	48 (4.9, 35.4) 5000	58.8 (6, 43.4) 5000	62.5 (6.37, 46,1) 5500 * 56.6 (5.76, 41,7) 5500	73.5 (7.4, 54.2) 4000	75 (7.6, 55.3) 5500	76 (7.7, 56.1) 5500

* Low-compression engine for regular fuel
** from frame No. 6 007 001, 78 model

Engine

Technical Data

Model	R 60 7	R 75 7	R 80 7	R 100 7	R 100 S	R 100 RS
Mean piston speed m s (ft min) at engine speed min⁻¹	15.1 (2972) 6400	14.6 (2874) 6200	16.4 (3228) * 17.1 (3366) 7000 7250	15.3 (3012) 6500	16.5 (3248) 7000	17.1 (3366) 7250
Compression in bar good normal poor	more than 10.0 8.5 . . . 10.0 below 8.5					
Compression test instructions (Motorcycle with starter)	1. Unscrew spark plugs 2. Measurement to be carried out with a calibrated compression gauge with fully charged battery, engine at normal operating temperature and throttle twist grip fully open at starter speed. Remove constant pressure carburetor before test on R 60 7 only.					
Weight complete, kg (lbs) with starter, carburetor, oil; without coils and intake system	63.5 (140.0)	64.9 (143.1)	63.5 (140.0)	62.5 (137.8)		
Fuel grade	* regular grade fuel super (premium) fuel					
Rated fuel consumption Imperial miles per gallon [illegible] 100 km (at 110 km h (68 mile h))	51.4/5.5	62.8 4.5	59.5 4.75 * 56.5 5.0	62.8 4.5	51.8/5.45	49.1 5.75

* low-compression engine

12 77 Alternat on

Engine

Technical Data

Model	R 60 7	R 75 7	R 80 7	R 100 7	R 100 S	R 100 RS
Engine Lubrication: Lubrication system	Force feed circulation					
Oil filter	in main circuit (full flow)					
Differential pressure for opening the bypass valve – bars (lb in²)	1.5 (21.3)					
Oil pressure warning lamp lights at below	0.2...0.5 bar (2.8 [illegible] 7.1 lb/in²)					
Safety valve opening pressure bars (lb in²)	5.0 (71.1)					
Oil filling quantity without filter change – liters (Imp. pints) with filter change – liters (Imp. pints)	2.0 (3.5/2.1) 2.25 (4.0/2.38)					
Oil consumption litres 100 km max.	0.1 (355 mile/Imp. pint)					
Type of oil: Viscosity at external temperature, primarily over + 30° C (86° F) over 0° C (32° F) below 0° C (32° F) All the year round, down to –20° C (–4° F)	HD branded oil for spark igniton engines SAE 40, SAE 20 W 50 SAE 20 W 40, SAE 20 W 50 SAE 10 W 30, SAE 10 W 40, SAE 10 W 50 SAE 15 W 50					
Oil Pump Oil pump design	Eaton type (hyp. trochoidal gearing)					
Delivery liters hour at rev min	1400 (308 Imp. gal) 6000 (1320 Imp. gal)					
Outer rotor diameter, mm(in)	$57.1^{0}_{-0.025}$ $\left(2.248^{0}_{-0.0010}\right)$					
Housing inner diameter, mm(in)	$57.2^{+0.046}_{0}$ $\left(2.252^{+0.0018}_{0}\right)$					
Outer rotor pump housing clearance, mm(in)	0.10...0.17 (0.0039...0.0067)					

Engine

Technical Data

Model	R 60/7	R 75/7	R 80/7	R 100/7	R 100 S	R 100 RS
Rotor height, mm(in)	$14^{-0.015}_{-0.045}$ $\left(0.5512^{-0.00059}_{-0.00177}\right)$					
Housing depth, mm(in)	$14^{+0.025}_{+0.010}$ $\left(0.5512^{+0.00098}_{+0.00039}\right)$					
Clearance between pump housing base and rotor seal base, mm(in)	0.025 . . . 0.070 (0.00098 . . . 0.00275)					
Gap between inner and outer rotor, mm(in)	0.12 . . . 0.20 (0.0047 . . . 0.0079)					
Entry depth in cover, maximum, mm(in)	0.05 (0.0020)					
Length of excess pressure spring, unbiased, mm(in)	68 (2.677)					
Valve clearance:						
Set with engine cold, max. 35° C (95° F)						
Inlet valve, mm(in)	0.15 (0.006)					
Exhaust valve, mm(in)	0.20 (0.008)					
(0.10 (0.004) / 0.15 (0.006) after 1000 km [600 mile] Inspection)						
Valve timing settings (tolerance ± 2.0°)	Camshaft setting with 2 mm (0.08 in) valve clearance					
Inlet opens	TDC 6 BTDC		10° BTDC 16 BTDC *			
Inlet closes	40° ABDC 34 ABDC		50° ABDC 44 ABDC			
Exhaust opens	40° BBDC 46 BBDC		50° BBDC 56 BBDC			
Exhaust closes	TDC 6 BTDC *		10° BTDC 4 BTDC			
Valves:						
Overall valve length						
Inlet, mm(in)	99.5 – 0.3 (3.917 – 0.012)		98.8 – 0.4 (3.890 – 0.016)			
Exhaust, mm(in)	98.5 – 0.3 (3.878 – 0.012)		98.8 – 0.4 (3.890 – 0.016)			
Valve head diameter Inlet, mm(in)	38 (1.496)	42 (1.654)	42 (1.654)	42 (1.654)	44 (1.73)	44 (1.73)
Valve head diameter Exhaust, mm(in)	34 (1.339)	38 (1.496)	38 (1.496)	40 (1.575)	40 (1.575)	40 (1.575)
Stem diameter Inlet, mm(in)	$8^{-0.050}_{-0.065}$ $\left(0.3150^{-0.0020}_{0.0026}\right)$					

* 78 models

Engine

Technical Data

Model	R 60/7	R 75/7	R 80/7	R 100/7	R 100 S	R 100 RS
Stem diameter Exhaust, mm	$8^{-0.050}_{-0.065}$ $\left(0.3150^{-0.0020}_{0.0026}\right)$					
Minimum rim thickness of valve head inlet, mm(in)	1 (0.039)					
Exhaust, mm(in)	1 (0.039)					
Valve head deflection, mm(in)	0.025 (0.0010)					
Valve seat ring: Outer diameter, mm Inlet	$39.2^{0}_{-0.025}$ $\left(1.543^{0}_{-0.001}\right)$	$43.2^{0}_{-0.025}$ $\left(1.701^{0}_{-0.001}\right)$			$45.2^{0}_{-0.025}$ $\left(1.780^{0}_{-0.001}\right)$	
Outer diameter, mm Exhaust	$39.2^{0}_{-0.025}$ $\left(1.543^{0}_{-0.001}\right)$	$43.2^{0}_{-0.066}$ $\left(1.701^{0}_{-0.002}\right)$			$45.2^{0}_{-0.025}$ $\left(1.780^{0}_{-0.001}\right)$	
Valve seat ring bore in cylinder head: Inlet, mm	$39^{+0.025}_{0}$ $\left(1.535^{+0.001}_{0}\right)$	$43^{+0.025}_{0}$ $\left(1.693^{+0.001}_{0}\right)$			$45^{+0.025}_{0}$ $\left(1.772^{+0.001}_{0}\right)$	
Exhaust, mm	$39^{+0.025}_{0}$ $\left(1.535^{+0.001}_{0}\right)$	$43^{+0.025}_{0}$ $\left(1.693^{+0.001}_{0}\right)$			$45^{+0.025}_{0}$ $\left(1.772^{+0.001}_{0}\right)$	
Interference fit in head Inlet, mm	0.15 . . . 0.20 (0.006 . . . 0.008)					
Exhaust, mm	0.11 . . . 0.15 (0.004 . . . 0.006)					
Valve seat angle, degrees	45					
Valve seat width: Inlet, mm(in)	1.5 (0.059)					
Exhaust, mm(in)	2.0 (0.079)					

Engine

Technical Data

Model	R 60/7	R 75/7	R 80/7	R 100/7	R 100 S	R 100 RS
Valve seat ring oversize, mm(in)	0.2 (0.0079)					
Valve guides: Overall length, mm(in) inlet:	48 (1.8898)					
exhaust:	48 (1.8898)					
Outer diameter, mm(in)	$14^{+0.061}_{+0.050}$ $\left(0.5512^{+0.0024}_{+0.0020}\right)$					
Inside diameter, mm(in)	8 H 7 (0.315 H 7)					
Bore in cylinder head, mm(in)	14 H 7 (0.551 H 7)					
Interference fit in cylinder head, mm(in)	0.032...0.061 (0.0012...0.0024)					
Oversize, first stage diameter, mm(in)	$14.1^{+0.061}_{+0.050}$ $\left(0.555^{+0.0024}_{+0.0020}\right)$					
Second stage diameter, mm(in)	$14.2^{+0.061}_{+0.050}$ $\left(0.559^{+0.0024}_{+0.0020}\right)$					
Valve stem clearance: Inlet, mm(in)	0.050...0.080 (0.0020...0.0031)	0.050...0.080 (0.0019...0.0031)				
Exhaust, mm(in)	0.065...0.095 (0.0026...0.0037)	0.050...0.080 (0.0019...0.0031)				
Maximum permissible wear tolerance, mm(in)	0.15 (0.0059)					
Valve gear: Valve operation	by the camshaft via hard cast tappets, push rods and rocker arms					
Camshaft drive	Duplex chain 3/8 × 7/32 (double roller chain) with chain tensioner under spring pressure (leaf spring)					
Number of links	50					

12/77 Alternator

Engine

Technical Data

Model	R 60/7	R 75/7	R 80/7	R 100/7	R 100 S	R 100 RS
Valve Springs: Wire thickness, mm(in)	4.25 (0.167)					
Outer coil diameter, mm(in)	31.9 (1.256)					
Spring length, relaxed, mm(in)	approx. 43.5 (1.712)					
Spring force in kp at test length, mm(lb in)	29 at 37.6 70 at 28.5 (63.9 at 1.48, 154 at 1.12)					
Coil direction	right hand					
Number of windings, resilient	4					
Number of windings, total	6					
Fitting direction	With the windings painted green facing the cylinder head side					
Rocker arms:	needle roller mounted					
Axial float of rocker arm	Clearance-free but easily movable					
Rocker arm ratio	1 : 1.39					

Engine

Technical Data

Model	R 60/7	R 75/7	R 80/7	R 100/7	R 100 S	R 100 RS
Camshaft: Flange bearing bore in crank case, diameter, mm(in)	$40^{+0.039}_{0}$			$(1.575^{+0.0015}_{0})$		
Flange bearing outer diameter, mm(in)	$40^{0}_{-0.016}$			$(1.575^{0}_{-0.0006})$		
Flange bearing bore diameter, mm(in)	$25^{+0.013}_{0}$			$(0.984^{+0.0005}_{0})$		
Camshaft bearing journals – alternator end, diameter, mm(in)	$25^{-0.020}_{-0.033}$			$(0.984^{-0.0007}_{-0.0013})$		
Bearing bore, flywheel end, for camshaft in crank case, diameter, mm(in)	$24^{+0.021}_{0}$			$(0.945^{+0.0008}_{0})$		
Camshaft bearing journal – flywheel end, diameter, mm(in)	$24^{-0.020}_{-0.033}$			$(0.945^{-0.0008}_{-0.0013})$		
Alternator and flywheel end radial clearance, mm(in)	0.02...0.046 (0.0008...0.0018)					
Maximum permissible deflection of contact breaker shaft, mm(in)	0.02 (0.00079)					
Axial float (clearance between camshaft starter collar and flange mounted bearing) mm(in)	0.1 ± 0.02 (0.0039 ± 0.0008)					
Cam base circle diameter, mm(in)	28 (1.102)					
Cam lift, mm(in)	6.198 (0.2440)	6.756 (0.2660)				
Tappet outer diameter, mm(in)	$22^{-0.025}_{-0.015}$			$(0.8661^{-0.0010}_{-0.0006})$		
Tappet bore in crankcase, diameter, mm(in)	$22^{+0.006}_{-0.015}$			$(0.8661^{+0.0002}_{-0.0006})$		
Tappet radial clearance, mm(in)	0.01...0.051 (0.0004...0.0020)					
Maximum permissible wear tolerance for tappets, mm(in)	0.075 (0.0030)					

Engine

Technical Data

Model		R 60/7	R 75/7	R 80/7	R 100/7	R 100 S	R 100 RS
Crankshaft and Bearings:				**Main bearing journal dia. mm (in)** Generator side		Flywheel side	
Standard 0	red		$60.00^{-0.030}_{-0.040}$	$(2.3622^{-0.0012}_{-0.0016})$	$60.00^{-0.010}_{-0.020}$	$(2.3622^{-0.0004}_{-0.0008})$	
	blue		$60.00^{-0.040}_{-0.049}$	$(2.3622^{-0.0016}_{-0.0019})$	$60.00^{-0.020}_{-0.029}$	$(2.3622^{-0.0008}_{-0.0011})$	
	green		$60.00^{-0.045}_{-0.060}$	$(2.3622^{-0.0018}_{-0.0024})$			
First undersize 0,25 mm	red		$59.75^{-0.030}_{-0.040}$	$(2.3524^{-0.0012}_{-0.0016})$	$59.75^{-0.010}_{-0.020}$	$(2.3524^{-0.0004}_{-0.0008})$	
	blue		$59.75^{-0.040}_{-0.049}$	$(2.3524^{-0.0016}_{-0.0019})$	$59.75^{-0.020}_{-0.029}$	$(2.3524^{-0.0008}_{-0.0011})$	
Second undersize 0,50 mm	red		$59.50^{-0.030}_{-0.040}$	$(2.3425^{-0.0012}_{-0.0016})$	$59.50^{-0.010}_{-0.020}$	$(2.3425^{-0.0004}_{-0.0008})$	
	blue		$59.50^{-0.040}_{-0.049}$	$(2.3425^{-0.0016}_{-0.0019})$	$59.50^{-0.020}_{-0.029}$	$(2.3425^{-0.0008}_{-0.0011})$	
Third undersize 0,75 mm	red		$59.25^{-0.030}_{-0.040}$	$(2.3327^{-0.0012}_{-0.0016})$	$59.25^{-0.010}_{-0.020}$	$(2.3327^{-0.0004}_{-0.0008})$	
	blue		$59.25^{-0.040}_{-0.049}$	$(2.3327^{-0.0016}_{-0.0019})$	$59.25^{-0.020}_{-0.029}$	$(2.3327^{-0.0008}_{-0.0011})$	
Bore for 3-component bearing in crankcase, diameter, mm(in)			$65^{+0.019}_{0}$	$(2.5591^{+0.0007}_{0})$			
Bore for 3-component bearing in bearing cap, diameter, mm(in)			$65^{+0.010}_{+0.030}$	$(2.5591^{+0.0004}_{+0.0012})$			
Main bearing journal, radial clearance, mm(in)			0.035...0.065 (0.0014...0.0026)				
Bearing seat for grooved bearings of front crankshaft mounting, diameter, mm(in)			$35^{+0.025}_{+0.009}$	$(1.3779^{+0.0010}_{+0.0004})$			
Bearing seat bore for grooved bearing in timing cover, diameter, mm(in)			$62^{-0.009}_{-0.039}$	$(2.4409^{-0.0004}_{-0.0015})$			

Engine

Technical Data

Model	R 60/7	R 75/7	R 80/7	R 100/7	R 100 S	R 100 RS
Crankshaft sprocket seat diameter, mm(in)	$35.003^{+0.020}_{+0.009}$			$(1.3781^{+0.0008}_{+0.0004})$		
Mounting bore for sprocket, mm(in)	$35.003^{+0.003}_{-0.013}$			$(1.3781^{+0.0001}_{-0.0005})$		
Axial float, crankshaft, mm(in)	0.08...0.15 (0.0031...0.0059)					
Thrust washer, red – thickness "S" mm(in)	2.483...2.530 (0.0978...0.0996)					
blue – thickness "S" mm(in)	2.530...2.578 (0.0996...0.1015)					
green – thickness "S" mm(in)	2.578...2.626 (0.1015...0.1034)					
yellow – thickness "S" mm(in)	2.626...2.673 (0.1034...0.1052)					
Maximum permissible wear tolerance, mm(in)	0.20 (0.0079)					
Maximum permissible deflection at shaft journal (alternator end) externally when supported at main bearing points, mm(in)	0.02 (0.00079)					
Maximum permissible dynamic imbalance in crankshaft (without flywheel), cmp	20					
Maximum lateral deflection at flywheel, mm(in)	0.1 (0.0039)					
Connecting and bearings	Diameter mm Crank pin					
Standard 0	$48.00^{-0.009}_{-0.025}$			$(1.890^{-0.0004}_{-0.0010})$		
1st undersize 0.25 mm	$47.75^{-0.009}_{-0.025}$			$(1.880^{-0.0004}_{-0.0010})$		
2nd undersize 0,50 mm	$47.50^{-0.009}_{-0.025}$			$(1.870^{-0.0004}_{-0.0010})$		
3rd undersize 0.75 mm	$47.25^{-0.009}_{-0.025}$			$(1.860^{-0.0004}_{-0.0010})$		
Basic bore diameter for big end bearing eye, mm(in)	$52^{+0.010}_{0}$			$(2.047^{+0.0004}_{0})$		
Connecting rod radial clearance mm(in)	0.023...0.069 (0.0009...0.0027)					
Width of connecting rod at big end bearing eye, mm (in)	$22^{-0.065}_{-0.117}$			$(0.866^{-0.0026}_{-0.0046})$		
Crank pin bearing width, mm(in)	$22^{+0.149}_{-0.065}$			$(0.866^{+0.0059}_{-0.0026})$		
Axial connecting rod clearance, mm(in)	0.130...0.266 (0.0051...0.0105)					
Maximum permissible axial wear tolerance in connecting rod clearance, mm(in)	0.32 (0.0126)					

Engine

Specifications

Model	R 60/7	R 75/7	R 80/7	R 100/7	R 100 S	R 100 RS
Distance between centers mm (in)	135 (5.315)					
Small-end bore (basic dimension) mm (in)	$24^{+0.021}_{0}$ $(0.9449^{+0.0008}_{0})$					
Small-end bushing extl. dia. mm (in)	24.060...24.100 (0.9472...0.9488)					
Bore in small-end bushing for piston pin mm (in)	$22^{+0.020}_{+0.015}$ $(0.8661^{+0.0008}_{+0.0006})$					
Bore in small-end bushing for piston pin, wear limit mm (in)	22 + 0.040 (0.8661 + 0.0016)					
Max. deviation from parallel of connecting rod bores with bearing shells at 150 mm (5.91 in) spacing mm (in)	0.04 (0.0016)					
Max. connecting rod bore twist at 150 mm (5.91 in) spacing mm (in)	1.5 (0.06)					
Permissible weight difference between the two connecting rods of the engine g (oz)	± 3 (± 0.106)					
Cylinders: Bore, initial value A mm (in)	73.500 + 0.01 (2.8937 + 0.0004)	82.005 + 0.01 (3.2285 + 0.0004)	84.795 + 0.01 (3.3384 + 0.0004)	94.005 + 0.01 (3.7010 + 0.0004)	94.005 + 0.01 (3.7010 + 0.0004)	94.005 + 0.01 (3.7010 + 0.0004)
B mm (in)	73.510 + 0.01 (2.8941 + 0.0004)	82.015 + 0.01 (3.2289 + 0.0004)	84.805 + 0.01 (3.3388 + 0.0004)	94.015 + 0.01 (3.7014 + 0.0004)	94.015 + 0.01 (3.7014 + 0.0004)	94.015 + 0.01 (3.7014 + 0.0004)
C mm (in)	73.520 + 0.01 (2.8945 + 0.0004)	82.025 + 0.01 (3.2293 + 0.0004)	84.815 + 0.02 (3.3392 + 0.0004)	94.025 + 0.01 (3.7018 + 0.0004)	94.025 + 0.01 (3.7018 + 0.0004)	94.025 + 0.01 (3.7018 + 0.0004)
1st oversize, + 0.50 mm (0.0197 in) R 100/7 – R 100 RS + 0.25 mm (0.0098 in) A mm (in)	74.000 + 0.01 (2.9134 + 0.0004)	82.505 + 0.01 (3.2482 + 0.0004)	85.045 + 0.01 (3.3482 + 0.0004)	94.255 + 0.01 (3.7108 + 0.0004)	94.255 + 0.01 (3.7108 + 0.0004)	94.255 + 0.01 (3.7108 + 0.0004)
B mm (in)	74.010 + 0.01 (2.9138 + 0.0004)	82.515 + 0.01 (3.2486 + 0.0004)	85.055 + 0.01 (3.3486 + 0.0004)	94.265 + 0.01 (3.7112 + 0.0004)	94.265 + 0.01 (3.7112 + 0.0004)	94.265 + 0.01 (3.7112 + 0.0004)
C mm (in)	74.020 + 0.01 (2.9142 + 0.0004)	82.525 + 0.01 (3.2490 + 0.0004)	85.065 + 0.01 (3.3490 + 0.0004)	94.275 + 0.01 (3.7116 + 0.0004)	94.275 + 0.01 (3.7116 + 0.0004)	94.275 + 0.01 (3.7116 + 0.0004)
2 nd oversize, + 1.00 mm (0.0394 in) A mm (in)	74.500 + 0.01 (2.9331 + 0.0004)	83.005 + 0.01 (3.2679 + 0.0004)				
B mm (in)	74.510 + 0.01 (2.9335 + 0.0004)	83.015 + 0.01 (3.2683 + 0.0004)				
C mm (in)	74.520 + 0.01 (2.9339 + 0.0004)	83.025 + 0.01 (3.2687 + 0.0004)				
Surface roughness µm	3 – 7					

Engine

Specifications

Model	R 60/7	R 75/7	R 80/7	R 100/7	R 100/s	R 100/RS
Permissible out-of-roundness of cylinder bore mm (in)	0.01 (0.0004)					
Permissible conicity of cylinder bore (narrower at top) mm (in)	0.02 (0.0008)					
Pistons:						
Pattern	Raised oval convex					
Weight group of complete piston	stamped with + or −					
Piston dia. (original equipment) −						
A mm (in)	73.470 (2.8925)	81.965 (3.2270)	84.765 (3.3372)	93.960 (3.6992)	93.960 (3.6992)	93.960 (3.6992)
B mm (in)	73.480 (2.8929)	81.975 (3.2274)	84.775 (3.3376)	93.970 (3.6996)	93.970 (3.6996)	93.970 (3.6996)
C mm (in)	73.490 (2.8933)	81.985 (3.2277)	84.785 (3.3380)	93.980 (3.7000)	93.980 (3.7000)	93.980 (3.7000)
1st oversize, +0.50 mm (0.0197 in) R 80/7 – R 100 RS + 0.25 mm (0.0098 in)						
A mm (in)	73.970 (2.9122)	82.465 (3.2466)	85.015 (3.3470)	94.210 (3.7090)	94.210 (3.7090)	94.210 (3.7090)
B mm (in)	73.980 (2.9126)	82.475 (3.2470)	85.025 (3.3474)	94.220 (3.7094)	94.220 (3.7094)	94.220 (3.7094)
C mm (in)	73.990 (2.9130)	82.485 (3.2474)	85.035 (3.3478)	94.230 (3.7098)	94.230 (3.7098)	94.230 (3.7098)
2nd oversize, + 1.00 mm (0.0394 in)						
A mm (in)	74.470 (2.9319)	82.965 (3.2663)				
B mm (in)	74.480 (2.9323)	82.975 (3.2667)				
C mm (in)	74.490 (2.9327)	82.985 (3.2671)				
Installed piston clearance mm (in) clearance mm (in)	0.020 – 0.040 (0.0008 – 0.0016)	0.019 . . . 0.041 (0.0007 . . . 0.0016)	0.023 – 0.047 (0.0009 – 0.0019)	0.028 . . . 0.052 (0.001 . . . 0.0020)		
Max. permissible clearance between piston and cylinder caused by wear mm (in)	0.08 (0.0031)					
Direction of piston installation	Arrow and "vorn" (front) inscription pointing to front of motorcycle					

Engine

Technical Data

Model	R 60 7	R 75 7	R 80 7	R 100 7	R 100 S	R 100 RS
Piston rings: Rectangular ring first groove [1] Height, mm(in)	$1.75^{-0.010}_{-0.022}$ $\left(0.06890^{-0.00039}_{-0.00086}\right)$					
Ring gap, mm(in)	0.25 . . . 0.40 (0.0098 . . . 0.0157)	0.30 . . . 0.50 (0.0118 . . . 0.0197)				
Side clearance, mm(in)	0.06 . . . 0.09 (0.0024 . . . 0.0035)					
Lower compression ring, second groove [1] Height, mm(in)	$2.00^{-0.010}_{-0.022}$ $\left(0.07874^{+0.00039}_{+0.00087}\right)$					
Ring gap, mm(in)	0.25 . . . 0.40 (0.0098 . . . 0.0157)	0.30 . . . 0.45 (0.0118 . . . 0.0177)				
Side clearance, mm(in)	0.04 . . . 0.07 (0.0016 . . . 0.0027)					
Equal chamfer ring, third groove [1] Height, mm(in)	$4.00^{-0.010}_{-0.022}$ $\left(0.15748^{+0.00039}_{+0.00087}\right)$					
Ring gap, mm(in)	0.25 . . . 0.35 (0.0098 . . . 0.0138)	0.25 . . . 0.40 (0.0098 . . . 0.0157)				
Side clearance, mm(in)	0.02 . . . 0.05 (0.0008 . . . 0.0020)	0.03 . . . 0.06 (0.0012 . . . 0.0024)				
Fitting direction of piston rings	With marking "top" upward					

[1] Not in accordance with DIN specifications – special BMW version

Engine

Technical Data

Model	R 60/7	R 75/7	R 80/7	R 100/7	R 100 S	R 100 RS
Piston pins: Piston pin offset from piston centre, mm(in)	1.5 (0.059)					
Piston pin diameter, code colouring white, mm(in)	$22^{0}_{-0.003}$			$\left(0.8661^{0}_{-0.00012}\right)$		
Piston pin diameter, code colouring black, mm(in)	$22^{-0.003}_{-0.006}$			$\left(0.8661^{-0.00012}_{-0.00024}\right)$		
Bore diameter of piston boss, colour coding (white) W punched in piston crown, mm(in)	$22^{0.003}_{0}$			$\left(0.8661^{+0.00012}_{0}\right)$		
Bore diameter of piston boss, colour code (black) S punched in piston crown, mm(in)	$22^{0.003}_{0}$			$\left(0.8661^{-0.00012}_{0}\right)$		
Piston pin clearance[1]) in piston, mm(in)	0 ... 0.006			(0 ... 0.00024)		
Running clearance of piston pin in connecting rod bush mm(in)	0.015 ... 0.026			(0.00059 ... 0.00102)		

[1]) Piston and piston pin must always be renewd together.

12.77 Alteration

Engine

Technical Data

Model	R 60/7	R 75/7	R 80/7	R 100/7	R 100 S	R 100 RS
Road performance:	The actual maximum speed reached by the motorcycle after running in depends to a high degree on the air resistance offered by the driver and is governed by such variable factors as size, attitude and clothing, the condition of the road and weather conditions.					
Speed, seated kph(mph)	155 (96)	165 (103)	172 (107) / 165* (103)	178 (111)	195 (121)	197 (122)
Speed, prone kph(mph)	167 (104)	177 (110)	182 (113) / 177 (110)	188 (117)	over 200 (124)	over 200 (124)
Acceleration 0 to 50 kph (31 mph) in secs	2.2	2.0	1.8 / 1.9	1.6	1.6	1.6
0 to 80 kph (50 mph) in secs	5.0	4.4	3.9 / 4.3	3.6	3.5	3.5
0 to 100 kph (62 mph) in secs	7.7	6.7	5.9 / 6.5	5.1	4.7	4.6
0 to 120 kph (75 mph) in secs	10.8	9.1	8.0 / 8.8	7.2	6.8	6.8
0 to 140 kph (87 mph) in secs	16.0	13.1	11.3 / 12.6	9.8	8.8	8.8
0 to 160 kph (100 mph) in secs	27.5	19.8	15.6 / 18.8	13.7	12.6	12.6

* values with low-compression engine

Tightening torques in Nm (ft.lb)

Cyl. head studs (in 3 stages 15—35—39)	35...39 (25.8...28.8)
Connecting rod bolts	48...52 (35.4...38.4)
Flywheel on crankshaft	100...105 (73.7...77.4)
Oil sump at crankcase	9...11 (6.6...8.1)
Nuts for valve adjustment screw	18...23 (13.3...17.0)
Carburetor threaded stub pipe	12+2 (8.8+1.5)

All other nuts, screws and bolts are to be tightened with the values recommended in the manufacturer's tables or the latest BMW Standard Specification 60 002.0.

Motor

Specifications – '79 models

Model	R 80/7	R 100 T	R 100 S	R 100 RT	R 100 RS
Engine design	4 stroke horizontally opposed engine with overhead valves in V configuration				
Location of engine number	on engine block above oil filler pipe				
Cylinder bore mm (in)	84.8 (3.34)	94 (3.70)	94 (3.70)		
Piston stroke mm (in)	70.6 (2.78)				
Number of cylinders	2				
Cylinder arrangement	opposed				
Stroke/bore ratio	0.83	0.75	0.75		
Rated cubic capacity cm^3 (in^3)	785 (47.9)	971 (59.3)	971 (59.3)		
Actual cubic capacity cm^3 (in^3)	797.5 (48.6)	980 (59.7)	980 (59.7)		
Compression ratio	9.2:1 * 8.2:1	9.5:1	9.5:1		
Maximum useful output DIN kW (hp) at engine speed min^{-1}	41 (55) 7000 * 37 (50) 7250	48 (65) 660	51,6 (70) 7250		
Maximum permissible constant engine speed min^{-1}	7200	7000	7200		
Maximum permissible engine speed min^{-1}	7400	7400	7400		
Idling speed min^{-1}	800 . . . 1100				
Maximum permissible engine speed during running in: up to 1000 km (600 miles) min^{-1} up to 2000 km (1200 miles) min^{-1}	4000 4500				
Direction of engine rotation	clockwise viewed towards dynamo				
Maximum torque in Nm (mkp, lb. ft) at engine speed min^{-1}	62.5 (6.37, 46.7) 5500 * 56.6 (5.76, 41.7) 5500	75 (7.6, 55.3) 5500	76 (7.7, 56.1) 5500		

* Low-compression engine for regular fuel

11.78 Addition

11.78 Addition

Engine

Specifications – '79 models

Model	R 80/7	R 100 T	R 100 S	R 100 RT	R 100 RS
Mean piston speed m/s (ft/min) at engine speed min^{-1}	16.4 (3228) * 17.1 (3366) 7000 * 7250	16.55 (3248) 6600	17.1 (3366) 7250		
Compression in bar good normal poor	more than 10.0 8.5 . . . 10.0 below 8.5				
Compression test instructions (Motorcycle with starter)	1. Unscrew spark plugs 2. Measurement to be carried out with a calibrated compression gauge with fully charged battery, engine at normal operating temperature at starter speed. Remove constant pressure carburetor before test.				
Weight complete, kg (lbs) with starter, carburetor, oil; without coils and intake system	63.5 (140.0)	62.5 (137.8)			
Fuel grade	* regular grade fuel super (premium) fuel				
Rated fuel consumption Imperial miles per gallon /us mpg/liters per 100 km (at 110 km [68 mile/h])	59.5/49.5/4.75 * 56.5/47.0/5.0	51.8/43.2/5.45	49.1/40.9/5.75		

* low-compression engine

Engine — Specification – '79 models

Model	R 80/7	R 100 T	R 100 S	R 100 RT	R 100 RS
Engine Lubrication: Lubrication system	Force feed circulation				
Oil filter	in main circuit (full flow)				
Differential pressure for opening the bypass valve – bars (lb/in²)	1.5 (21.3)				
Oil pressure warning lamp lights at below	0.2...0.5 bar (2.8...7.1 lb/in²)				
Safety valve opening pressure bars (lb/in²)	5.0 (71.1)				
Oil filling quantity without filter change – liters (Imp. pints/US quarts) with filter change – liters (Imp. pints/US quarts)	2.0 (3.5/2.1) 2.25 (4.0/2.38)				
Oil consumption litres/100 km max.	0.1 (355 mile/Imp. pint)				
Type of oil:	HD branded oil for spark ignition engines				
Viscosity at external temperature, primarily over +30° C (86° F) over 0° C (32° F) below 0° C (32° F)	 SAE 40, SAE 20 W 50 SAE 20 W 40, SAE 20 W 50 SAE 10 W 30, SAE 10 W 40, SAE 10 W 50				
All the year round, down to –20° C (–4° F)	SAE 15 W 50				
Oil Pump Oil pump design	Eaton type (hyp. trochoidal gearing)				
Delivery liters/hour at rev/min	1400 (308 Imp. gal.) 6000 (1320 Imp. gal.)				
Outer rotor diameter, mm (in)	$57.1^{0}_{-0.025}$ ($2.248^{0}_{-0.0010}$)				
Housing inner diameter, mm (in)	$57.2^{+0.046}_{0}$ ($2.252^{+0.0018}_{0}$)				
Outer rotor/pump housing clearance, mm (in)	0.10...0.17 (0.0039...0.0067)				

Engine — Specifications – '79 models

Model	R 80/7	R 100 T	R 100 S	R 100 RT	R 100 RS
Rotor height, mm (in)	$14^{-0.015}_{-0.045}$ ($0.5512^{0.00059}_{-0.00177}$)				
Housing depth, mm (in)	$14^{+0.025}_{+0.010}$ ($0.5512^{+0.00098}_{+0.00039}$)				
Clearance between pump housing base and rotor seal base, mm (in)	0.025...0.070 (0.00098...0.00275)				
Gap between inner and outer rotor, mm (in)	0.12...0.20 (0.0047...0.0079)				
Entry depth in cover, maximum, mm (in)	0.05 (0.0020)				
Length of excess pressure spring, unbased, mm (in)	68 (2.677)				
Valve Clearance: Set with engine cold, max. 35° C (95° F) Inlet valve, mm (in) Exhaust valve, mm (in)	temperature 0.15 (0.006) (0.10 (0.004) 0.20 (0.008) (0.15 (0.006) after 1000 km [600 mile] Inspection)				
Valve timing settings (tolerance ± 2.0°)	Camshaft setting with 2 mm (0.08 in) valve clearance				
Inlet opens	16° BTDC				
Inlet closes	44° ABDC				
Exhaust opens	56° BBDC				
Exhaust closes	4° BTDC				
Valves: Overall valve length Inlet, mm (in) Exhaust, mm (in)	98.8–0.4 (3.890–0.016) 98.8–0.4 (3.890–0.016)				
Valve head diameter Inlet, mm (in)	42 (1.654)	44 (1.73)			
Valve head diameter Exhaust, mm (in)	38 (1.496)	40 (1.575)			
Stem diameter Inlet, mm (in)	$8^{-0.050}_{-0.065}$ ($0.3150^{-0.0020}_{-0.0026}$)				

Engine

Specifications – '79 models

Model	R 80/7	R 100 T	R 100 S	R 100 RT	R 100 RS
Stem diameter Exhaust, mm (in)	$8^{-0.050}_{-0.065}$ $(0.3150^{-0.0020}_{-0.0026})$				
Minimum rim thickness of valve head Inlet, mm (in) Exhaust, mm (in)	1 (0.039) 1 (0.039)				
Valve head deflection, mm (in)	0.025 (0.0010)				
Valve seat ring: Outer diameter, mm Inlet	$43{,}2^{0}_{-0{,}025}$ $(1.701^{0}_{-0.001})$	$45.2^{0}_{-0.025}$ $(1.780^{0}_{-0.001})$			
Outer diameter, mm Exhaust	$43{,}2^{0}_{-0.066}$ $(1.701^{0}_{-0.002})$	$45.2^{0}_{-0.025}$ $(1.780^{0}_{-0.001})$			
Valve seat ring bore in cylinder head: Inlet, mm	$43^{+0.025}_{0}$ $(1.693^{+0.001}_{0})$	$45^{+0.025}_{0}$ $(1.772^{+0.001}_{0})$			
Exhaust, mm	$43^{+0.025}_{0}$ $(1.693^{+0.001}_{0})$	$45^{+0.025}_{0}$ $(1.772^{+0.001}_{0})$			
Interference fit in head Inlet, mm Exhaust, mm	0.15 . . . 0.20 (0.006 . . . 0.008) 0.11 . . . 0.15 (0.004 . . . 0.006)				
Valve seat angle, degrees	45				
Valve seat width: Inlet, mm (in)	1.5 (0.059)				
Exhaust, mm (in)	2.0 (0.079)				

Engine

Specifications – '79 models

Model	R 80/7	R 100 T	R 100 S	R 100 RT	R 100 RS
Valve seat ring oversize, mm (in)	0.2 (0.0079)				
Valve guides: Overall length, mm (in) inlet: exhaust:	48 (1.8898) 48 (1.8898)				
Outer diameter, mm (in)	$14^{+0.061}_{+0.050}$ $(0.546^{+0.0023}_{+0.0019})$				
Inside diameter, mm (in)	8 H 7 (0.31 H 0.27)				
Bore in cylinder head, mm (in)	14 H 7 (0.54 H 0.27)				
Interference fit in cylinder head, mm (in)	0.032 . . . 0.061 (0.0012 . . . 0.0023)				
Oversize, first stage diameter, mm (in)	$14.1^{+0.061}_{+0.050}$ $(0.555^{+0.0024}_{+0.0020})$				
Second stage diameter, mm (in)	$14.2^{+0.061}_{+0.050}$ $(0.559^{+0.0024}_{+0.0020})$				
Valve stem clearance: Inlet, mm (in)	0.050 . . . 0.080 (0.0019 . . . 0.0031)				
Exhaust, mm (in)	0.050 . . . 0.080 (0.0019 . . . 0.0031)				
Maximum permissible wear tolerance, mm (in)	0.15 (0.0059)				
Valve gear: Valve operation	by the camshaft via hard cast tappets, push rods and rocker arms				
Camshaft drive	3/8 x 7/32 in single roller chain with socket insert and hydraulically damped chain tensioner				
Number of links	50				

Engine

Specifications — '79 models

Model	R 80/7	R 100 T	R 100 S	R 100 RT	R 100 RS
Valve Springs: Wire thickness, mm (in)	4.25 (0.167)				
Outer coil diameter, mm (in)	31.9 (1.256)				
Spring length, relaxed, mm (in)	approx. 43.5 (1.712)				
Spring force in kp at test length, mm (lb/in)	29 at 37.6	70 at 28.5 (63.9 at 1.48, 154 at 1.12)			
Coil direction	right hand				
Number of windings, resilient	4				
Number of windings, total	6				
Fitting direction	With the windings painted green facing the cylinder head side				
Rocker arms:	needle roller mounted				
Axial float of rocker arm	Clearance-free but easily movable				
Rocker arm ratio	1 : 1.39				

Engine

Specifications — '79 models

Model	R 80/7	R 100 T	R 100 S	R 100 RT	R 100 RS
Camshaft: Flange bearing bore in crank case, diameter, mm (in)	$40^{+0.039}_{0}$ ($1.575^{+0.0015}_{0}$)				
Flange bearing outer diameter, mm (in)	$40^{0}_{-0.016}$ ($1.575^{0}_{-0.0006}$)				
Flange bearing bore diameter, mm (in)	$25^{+0.013}_{0}$ ($0.984^{+0.0005}_{0}$)				
Camshaft bearing journals – alternator end, diameter, mm (in)	$25^{-0.020}_{0.033}$ ($0.984^{-0.0007}_{-0.0012}$)				
Bearing bore, flywheel end, for camshaft in crank case, diameter, mm (in)	$24^{+0.021}_{0}$ ($0.945^{0.0008}_{0}$)				
Camshaft bearing journal – flywheel end, diameter, mm (in)	$24^{-0.020}_{-0.033}$ ($0.945^{-0.0008}_{-0.0012}$)				
Alternator and flywheel end radial clearance, mm (in)	0.02...0.046 (0.0008...0.0018)				
Maximum permissible deflection of contact breaker shaft, mm (in)	0.02 (0.00079)				
Axial float (clearance between camshaft starter collar and flange mounted bearing) mm (in)	0.1±0.02 (0.0039±0.0008)				
Cam base circle diameter, mm (in)	28 (1.102)				
Cam lift, mm (in)	6.756 (0.2660)				
Tappet outer diameter, mm (in)	$22^{-0.025}_{-0.045}$ ($0.8661^{-0.0010}_{-0.0006}$)				
Tappet bore in crankcase, diameter, mm (in)	$22^{+0.006}_{-0.015}$ ($0.8661^{+0.0002}_{-0.0006}$)				
Tappet radial clearance, mm (in)	0.01...0.051 (0.0004...0.0020)				
Maximum permissible wear tolerance for tappets, mm (in)	0.075 (0.0030)				
Pushrod length mm (in)	275 ± 0.3				

Engine

Specifications

Model			R 80/7	R 100 T	R 100 S	R 100 RT	R 100 RS
Crankshaft and bearings *Crankshaft*			**Main bearing journal dia. mm (in)**				
			Generator end			**Flywheel end**	
Crankshaft markings		*red/red*	59.980 . . . 59.990 (2.3614 . . . 2.3618)			59.980 . . . 59.990 (2.3614 . . . 2.3618)	
Standard	*0*	*red/blue*	59.980 . . . 59.990 (2.3614 . . . 2.3618)			59.971 . . . 59.980 (2.3611 . . . 2.3614)	
		blue/red	59.971 . . . 59.980 (2.3611 . . . 2.3614)			59.980 . . . 59.990 (2.3614 . . . 2.3618)	
		blue/blue	59.971 . . . 59.980 (2.3611 . . . 2.3614)			59.971 . . . 59.980 (2.3611 . . . 2.3614)	
Stage 1	*0.25 mm (0.0098 in)*	*red/red*	59.730 . . . 59.740 (2.3516 . . . 2.3520)			59.730 . . . 59.740 (2.3516 . . . 2.3520)	
		red/blue	59.730 . . . 59.740 (2.3516 . . . 2.3520)			59.721 . . . 59.730 (2.3512 . . . 2.3516)	
		blue/red	59.721 . . . 59.730 (2.3512 . . . 2.3516)			59.730 . . . 59.740 (2.3516 . . . 2.3520)	
		blue/blue	59.721 . . . 59.730 (2.3512 . . . 2.3516)			59.721 . . . 59.730 (2.3512 . . . 2.3516)	
Stage 2	*0.50 mm (0.0197 in)*	*red/red*	59.480 . . . 59.490 (2.3417 . . . 2.3421)			59.480 . . . 59.490 (2.3417 . . . 2.3421)	
		red/blue	59.480 . . . 59.490 (2.3417 . . . 2.3421)			59.471 . . . 59.480 (2.3414 . . . 2.3417)	
		blue/red	59.471 . . . 59.480 (2.3414 . . . 2.3417)			59.480 . . . 59.490 (2.3417 . . . 2.3421)	
		blue/blue	59.471 . . . 59.480 (2.3414 . . . 2.3417)			59.471 . . . 59.480 (2.3414 . . . 2.3417)	
Stage 3	*0.75 mm (0.0295 in)*	*red/red*	59.230 . . . 59.240 (2.3319 . . . 2.3323)			59.230 . . . 59.240 (2.3319 . . . 2.3323)	
		red/blue	59.230 . . . 59.240 (2.3319 . . . 2.3323)			59.221 . . . 59.230 (2.3315 . . . 2.3319)	
		blue/red	59.221 . . . 59.230 (2.3315 . . . 2.3319)			59.230 . . . 59.240 (2.3319 . . . 2.3323)	
		blue/blue	59.221 . . . 59.230 (2.3315 . . . 2.3319)			59.221 . . . 59.230 (2.3315 . . . 2.3319)	
Bore for 3-layer bearing shell in engine block mm (in)			$65^{+0.019}_{0}$ (2.5591 $^{+0.0007}_{0}$)				
Bore for 3-layer bearing in bearing cap mm (in)			$65^{+0.019}_{0}$ (2.5591 $^{+0.0007}_{0}$)				
Main bearing journal radial clearance mm (in)			0.035 . . . 0.065 (0.0014 . . . 0.0026)				
Seat dia. for front crankshaft deep-groove ball bearing mm (in)			$35^{+0.025}_{+0.009}$ (1.3780 $^{+0.0010}_{+0.0004}$)				
Bearing seat bore for deep-groove ball bearing in timing chain cover mm (in)			$62^{-0.009}_{-0.039}$ (2.4409 $^{-0.0004}_{0.0015}$)				

11.78 Addition

11.78 Addition

Engine

Specifications

Model			R 80/7	R 100 T	R 100 S	R 100 RT	R 100 RS
Main bearing bushings Wall thickness mm (in)							
Standard	0	red	2.500 . . . 2.510 (0.0984 . . . 0.0988)				
		blue	2.511 . . . 2.521 (0.0989 . . . 0.0993)				
Stage 1	0.25 mm (0.0098 in)	red	2.625 . . . 2.635 (0.1033 . . . 0.1037)				
		blue	2.636 . . . 2.646 (0.1038 . . . 0.1042)				
Stage 2	0.50 mm (0.0197 in)	red	2.750 . . . 2.760 (0.1083 . . . 0.1087)				
		blue	2.761 . . . 2.771 (0.1087 . . . 0.1091)				
Stage 3	0.75 mm (0.0295 in)	red	2.875 . . . 2.885 (0.1132 . . . 0.1136)				
		blue	2.886 . . . 2.896 (0.1136 . . . 0.1140)				

Selection table, bearing cap assembly		to be combined only with: Main bearing bushing	to be combined only with: Crankshaft	∴ A	∴ B
Bearing cap assembly	red	red	red	65.000 . . . 65.015 (2.5591 . . . 2.5596)	130.003 . . . 130.023 (5.1182 . . . 5.1190)
Bearing cap assembly	blue	blue	blue	65.015 . . . 65.030 (2.5596 . . . 2.5602)	
Bearing cap assembly	red	red	red	65.000 . . . 65.015 (2.5591 . . . 2.5596)	130.023 . . . 130.043 (5.1190 . . . 5.1198)
Bearing cap assembly	blue	blue	blue	65.015 . . . 65.030 (2.5506 . . . 2.5602)	
with pressure relief valve					

Marking bearing cap

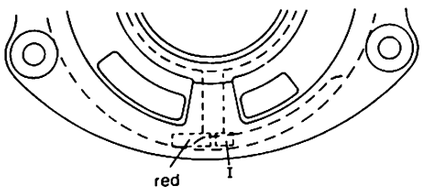

Engine

Specifications

Model	*R 80/7*	*R 100 T*	*R 100 S*	*R 100 RT*	*R 100 RS*
Engine block	*∅ A (main bearing bores) = 65 (2.5591) H 7* ***red** 65.000 . . . 65.015 (2.5591 . . . 2.5596)* ***blue** 65.015 . . . 65.030 (2.5596 . . . 2.5602)*			*∅ B (bearing cap bore) = 130 (5.1181)* ***I** 130.000 . . . 130.020 (5.1181 . . . 5.1189)* ***II** 130.020 . . . 130.040 (5.1189 . . . 5.1197)*	

Selection table, engine block assembly			*to be combined only with* *Main bearing bushing*	*Crankshaft*	Main bearing play at 20° C (68° F) ambient temperature
Engine block assembly	*red I*		*red*	*red*	*0.017 . . . 0.062 (0.0007 . . . 0.0024)*
Engine block assembly	*red II*		*red*	*red*	*0.017 . . . 0.062 (0.0007 . . . 0.0024)*
Engine block assembly	*blue I*		*blue*	*blue*	*0.020 . . . 0.064 (0.0008 . . . 0.0025)*
Engine block assembly	*blue II*		*blue*	*blue*	*0.020 . . . 0.064 (0.0008 . . . 0.0025)*

Marking engine housing

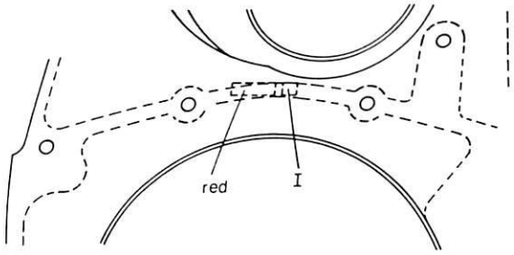

Engine

Specifications

Model		R 80/7	R 100 T	R 100 S	R 100 RT	R 100 RS
Main bearings		**Combination I**				
Standard 0		Generator end			Flywheel end	
		Bearing journal dia	Main bearing bushing	Bearing cap	Bearing journal dia	Main bearing bushing	Engine block
Crankshaft marking	red/red	59.980 . . 59.990 (2.3614 . . 2.3618)	red	red I	59.980 . . 59.990 (2.3614 . . 2.3618)	red	red I
	red/blue	59.980 . . 59.990 (2.3614 . . 2.3618)			59.971 . . 59.980 (2.3611 . . 2.3614)	blue	blue I
	blue/red	59.971 . . 59.980 (2.3611 . . 2.3614)	blue	blue I	59.980 . . 59.990 (2.3614 . . 2.3618)	red	red I
	blue/blue	59.971 . . 59.980 (2.3611 . . 2.3614)			59.971 . . 59.980 (2.3611 . . 2.3614)	blue	blue I
Standard 0		**Combination II**				
Crankshaft marking	red/red	59.980 . . 59.990 (2.3614 . . 2.3618)	red	red II	59.980 . . 59.990 (2.3614 . . 2.3618)	red	red II
	red/blue	59.980 . . 59.990 (2.3614 . . 2.3618)			59.971 . . 59.980 (2.3611 . . 2.3614)	blue	blue II
	blue/red	59.971 . . 59.980 (2.3611 . . 2.3614)	blue	blue II	59.980 . . 59.990 (2.3614 . . 2.3618)	red	red II
	blue/blue	59.971 . . 59.980 (2.3611 . . 2.3614)			59.971 . . 59.980 (2.3611 . . 2.3614)	blue	blue II

Engine

Specifications '79 models

Model	R 80/7	R 100 T	R 100 S	R 100 RT	R 100 RS
Seat dia. on crankshaft for chain sprocket mm (in)	$35.003^{+0.020}_{+0.009}$ $(1.3781^{+0.0008}_{+0.0004})$				
Chain sprocket mounting bore mm (in)	$35.003^{+0.003}_{-0.013}$ $(1.3781^{+0.0001}_{-0.0005})$				
Crankshaft endplay mm (in)	0.08 . . . 0.15 (0.0031 . . . 0.0059)				
Thrust washer red thickness "S" mm (in)	2.483 . . . 2.530 (0.0978 . . . 0.0996)				
blue thickness "S" mm (in)	2.530 . . . 2.578 (0.0996 . . . 0.1015)				
green thickness "S" mm (in)	2.578 . . . 2.626 (0.1015 . . . 0.1034)				
yellow thickness "S" mm (in)	2.626 . . . 2.673 (0.1034 . . . 0.1052)				
Max. play after wear mm (in)	0.20 (0.0079)				
Max. permissible runout at outer shaft journal (generator end when supported at main bearings mm (in)	0.02 60.0008)				
Max. permissible crankshaft imbalance (dynamic) without flywheel cmp	20				
Max. flywheel lateral runout mm (in)	0.1 (0.004)				
Connecting rods and bearings	Crankpin dia. mm (in)				
Standard 0	$48.00^{-0.009}_{-0.025}$ $(1.8898^{-0.0004}_{-0.0010})$				
Stage 1 0.25 mm (0.010 in)	$47.75^{-0.009}_{-0.025}$ $(1.8799^{-0.0004}_{-0.0010})$				
Stage 2 0.50 mm (0.020 in)	$47.50^{-0.009}_{-0.025}$ $(1.8701^{-0.0004}_{-0.0010})$				
Stage 3 0.75 mm (0.030 in)	$47.25^{-0.009}_{-0.025}$ $(1.8602^{-0.0004}_{-0.0010})$				
Big end bearing bore mm (in)	$52^{+0.015}_{0}$ $(2.0472^{+0.0006}_{0})$				
Big end bearing radial clearance mm (in)	0.023 . . . 0.069 (0.0009 . . . 0.0027)				
Big end bearing width mm (in)	$22^{-0.065}_{-0.117}$ $(0.8661^{-0.0026}_{-0.0046})$				
Crankpin bearing width mm (in)	$22^{+0.149}_{+0.065}$ $(0.8661^{+0.0059}_{+0.0026})$				
Connecting rod axial play mm (in)	0.130 . . . 0.266 (0.0051 . . . 0.0105)				
Max. axial play after wear mm (in)	0.32 (0.0126)				

Engine

Specifications (1979 models)

Model	R 80/7	R 100 T	R 100 S	R 100 RT	R 100 RS
Distance between centers mm (in)	135 (5 315)				
Small-end bore (basic dimension) mm (in)	$24^{+0.021}_{0}$ $(0.9449^{+0.0008}_{0})$				
Small-end bushing extl dia mm (in)	24 060 24 100 (0 9472 0 9488)				
Bore in small-end bushing for piston pin mm (in)	$22^{+0.020}_{+0.015}$ $(0.8661^{+0.0008}_{+0.0006})$				
Bore in small-end bushing for piston pin, wear limit mm (in)	22 + 0.040 (0.8661 + 0.0016)				
Max. deviation from parallel of connecting rod bores with bearing shells at 150 mm (5.91 in) spacing mm (in)	0 04 (0 0016)				
Max. connecting rod bore twist at 150 mm (5.91 in) spacing mm (in)	1 5 (0 06)				
Permissible weight difference between the two connecting rods of the engine g (oz)	+ 3 (+ 0 106)				
Cylinders:					
Bore, initial value A mm (in)	84 795 + 0.01 (3 3384 + 0 0004)	94 005 + 0 01 (3 7010 + 0 0004)			
B mm (in)	84 805 + 0.01 (3 3388 + 0 0004)	94 015 + 0 01 (3 7014 + 0 0004)			
C mm (in)	84 815 + 0.01 (3.3392 + 0 0004)	94 025 + 0 01 (3 7018 + 0 0004)			
1st oversize, + 0.50 mm (0.0197 in) R 100/7 – R 100 RS + 0.25 mm (0.0098 in) A mm (in)	85 045 + 0.01 (3.3482 + 0.0004)	94 255 + 0 01 (3 7108 + 0 0004)			
B mm (in)	85.055 + 0.01 (3.3486 + 0.0004)	94 265 + 0 01 (3 7112 + 0 0004)			
C mm (in)	85.065 + 0.01 (3.3490 + 0 0004)	94 275 + 0 01 (3 7116 + 0 0004)			
Surface roughness µm	3 7				

Engine

Specifications (1979 models)

Model		R 80/7	R 100 T	R 100 S	R 100 RT	R 100 RS
Permissible out-of-roundness of cylinder bore mm (in)		0.01 (0.0004)				
Permissible conicity of cylinder bore (narrower at top) mm (in)		0.02 (0.0008)				
Pistons: Pattern		Raised oval convex				
Weight group of complete piston		stamped with + or −				
Piston dia. (original equipment)	A mm (in) B mm (in) C mm (in)	84.765 (3.3372) 84.775 (3.3376) 84.785 (3.3380)	93.960 (3.6992) 93.970 (3.6996) 93.980 (3.7000)			
1st oversize, + 0.50 mm (0.0197 in) R 80/7 – R 100 RS + 0.25 mm (0.0098 in)	A mm (in) B mm (in) C mm (in)	85.015 (3.3470) 85.025 (3.3474) 85.035 (3.3478)	94.210 (3.7090) 94.220 (3.7094) 94.230 (3.7098)			
2nd oversize, + 1.00 mm (0.0394 in)	A mm (in) B mm (in) C mm (in)					
Installed piston clearance mm (in) clearance mm (in)		0.023 . . . 0.047 (0.0009 . . . 0.0019)	0.028 . . . 0.052 (0.0011 . . . 0.0020)			
Max. permissible clearance between piston and cylinder caused by wear mm (in)			0.08 (0.0031)			
Direction of piston installation		Arrow and "vorn" (front) inscription pointing to front of motorcycle				

Engine

Specifications – '79 models

Model	R 80/7	R 100 T	R 100 S	R 100 RT	R 100 RS
Piston rings: Rectangular ring first groove [1]) Height, mm (in)	1.75 $^{0.010}_{-0.022}$ (0.0689 $^{-0.00039}_{-0.00086}$)				
Ring gap, mm (in)	0.30 . . . 0.50 (0.0117 . . . 0.0197)				
Side clearance, mm (in)	0.06 . . . 0.09 (0.0023 . . . 0.0035)				
Lower compression ring, second groove [1]) Height, mm (in)	2.00 $^{+0.010}_{+0.022}$ (0.0787 $^{+0.00039}_{+0.00086}$)				
Ring gap, mm (in)	0.30 . . . 0.45 (0.0117 . . . 0.0175)				
Side clearance, mm (in)	0.04 . . . 0.07 (0.0016 . . . 0.0027)				
Equal chamfering, third groove [1]) Height, mm (in)	4.00 $^{+0.010}_{+0.022}$ (0.157 $^{+0.00039}_{+0.00086}$)				
Ring gap, mm (in)	0.25 . . . 0.40 (0.0098 . . . 0.0157)				
Side clearance, mm (in)	0.03 . . . 0.06 (0.0012 . . . 0.0024)				
Fitting direction of piston rings	With marking "top" upward				

[1]) Not in accordance with DIN specifications – special BMW version

Specifications – '79 models

Model	R 80/7	R 100 T	R 100 S	R 100 RT	R 100 RS
Piston pins: Piston pin offset from piston centre, mm (in)	1.5 (0.059)				
Piston pin diameter, code colouring white, mm (in)		$22^{0}_{-0.003}$	$(0.8661^{0}_{-0.00012})$		
Piston pin diameter, code colouring black, mm (in)		$22^{-0.003}_{-0.006}$	$(0.8661^{-0.00012}_{-0.00024})$		
Bore diameter of piston boss, colour coding (white) W punched in piston crown, mm (in)		$22^{+0.003}_{0}$	$(0.8661^{+0.00012}_{0})$		
Bore diameter of piston boss, colour code (black) S punched in piston crown, mm (in)		$22^{+0.003}_{0}$	$(0.8661^{-0.00012}_{0})$		
Piston pin clearance [1]) in piston, mm (in)	0...0.006 (0.00024)				
Running clearance of piston pin in connecting rod bush mm (in)	0.015...0.026 (0.00059...0.00102)				

[1]) Piston and piston pin must always be renew together.

Specifications – '79 models

Model	R 80/7		R 100 T	R 100 S	R 100 RT	R 100 RS
Road performance	The actual maximum speed reached by the motorcycle after running in depends to a high degree on the air resistance offered by the driver and is governed by such variable factors as size, attitude and clothing, the condition of the road and weather conditions.					
Speed, seated kph (mph)	172 (107)	* 165 (103)	191	200	ca. 190	197 (122)
Speed, prone kph (mph)	182 (113)	177 (110)	ca. 195 (121)	over 200 (124)		over 200 (124)
Acceleration 0 to 50 kph (31 mph) in secs	1.8	1.9	1.6	1.6	1.6	1.6
0 to 80 kph (50 mph) in secs	3.9	4.3	3.5	3.5	3.5	3.5
0 to 100 kph (62 mph) in secs	5.9	6.5	4.7	4.7	5.0	4.6
0 to 120 kph (75 mph) in secs	8.0	8.8	6.8	6.8	7.0	6.8
0 to 140 kph (87 mph) in secs	11.3	12.6	8.9	8.8	9.8	8.8
0 to 160 kph (100 mph) in secs	15.6	18.8	12.7	12.6	17.8	12.6

* values with low-compression engine

Tightening torques in Nm (ft. lb)

Cyl. head studs (in 3 stages 15 – 35 – 39)	35...39 (25.8...28.8)	Oil sump at crankase	9...11 (6.6...8.1)
Connecting rod bolts	48...52 (35.4...38.4)	Nuts for valve adjustment screw	18...23 (13.3...17.0)
Flywheel on crankshaft	100 105 (73.7...77.4)	Carburetor threaded stub pipe	12+2 (8.8+1.5)
		Camshaft flange bearing	15...3

All other nuts, screws and bolts are to be tightened with the values recommended in the manufacturer s tables or the latest BMW Standard Specification 60 002 0

Specifications (1981 models)

Engine				
Model	R 100	R 100 CS	R 100 RT	R 100 RS
Type	Four-stroke, horizontally-opposed, with overhead valves in hemispherical combustion chambers			
Location of engine number	On engine block, above oil filler			
Cylinder bore mm (in)	94 (3.701)			
Stroke mm (in)	70.6 (2.780)			
Number of cylinders	2			
Position of cylinders	horizontally opposed, transverse			
Stroke/bore ratio	0.75			
Displacement, fiscal cm^3 (in^3)	971 (59.25)			
Displacement, effective cm^3 (in^3)	980 (59.80)			
Compression ratio	8.2 : 1	9.5 : 1		
Max. power output kW (bhp) to DIN standard – at engine speed min^{-1}	49 (67) 7000	51 (70) 7000		
Max. continuous engine speed min^{-1}	7200			
Max. permissible engine speed min^{-1}	7400			
Idle speed min^{-1}	950 ± 150			
Permissible engine speeds during running in - up to 1000 km (600 miles) min^{-1} - up to 2000 km (1200 miles) min^{-1}	4000 4500			
Direction of rotation	Clockwise (to right), looking at alternator			
Max. torque Nm (lb.ft) - at engine speed min^{-1}	72 (53.1) 5500	76 (56.0) 6000		

Engine

Specifications (1981 models)

Model	R 100	R 100 CS	R 100 RT	R 100 RS
Mean piston speed m/s (ft/min) - at engine speed min^{-1}	16.4 (3228) 7000			
Compression test pressure bar (lb/in^2) - good - normal - poor	above 10.0 (142.2) 8.5 . . . 10.0 (120.9 . . . 142.2) below 8.5 (120.9)			
Compression test procedure (motorcycles with electric starter)	1. Unscrew and remove the spark plugs. 2. Measure with a calibrated compression tester: battery fully charged, engine at normal operating temperature, throttle twistgrip fully open. Turn engine over with starter motor.			
Fuel	Regular (2-star)	Premium (4-star)		
Fuel consumption by DIN 70030 standard test method at 110 km/h (68 mile/h) 1/100 km (Imp./US mile/gal)	5.0 (56.5, 47.0)	5.75 (49.1, 40.9)		

Specifications (1981 models)

Model	R 100	R 100 CS	R 100 RT	R 100 RS
Engine lubrication: System	Pressurized oil circuit			
Oil filter	Full-flow			
Pressure differential for bypass valve to open bar (lb/in^2)	1.5 (21.3)			
Oil pressure warning light comes on below bar (lb/in^2)	0.2 . . . 0.5 (2.8 . . . 7.1)			
Pressure relief valve opens at bar (lb/in^2)	5.0 (71.1)			
Oil content without filter renewal l (Imp. pints, US quarts) - with filter renewal l (Imp. pints, US quarts)	2.25 (4.4, 2.4) 2.50 (6.25, 2.64)			2.50 (6.25, 2.64) 2.75 (6.88, 2.91)
Oil consumption, max. l/1000 km (miles/Imp. pint, miles/US quart)	0.1 (355, 590)			
Oil grade	Brand-name HD oil for 4-stroke spark ignition engines, API Class SE or SF - see viscosity and temperature chart in Group 00			
Oil pump: Type	Eaton system (hypotrochoid gearing)			
Output rate l (Imp./US gal)/h - at running speed min^{-1}	1400 (308/370) 6000			
External rotor diameter mm (in)	$57.1\ ^{0}_{-0.025}$		$(2.2480\ ^{0}_{-0.0010})$	
Internal diameter of housing mm (in)	$57.2\ ^{+0.046}_{0}$		$(2.2520\ ^{+0.0018}_{0})$	
Clearance between external rotor and pump housing mm (in)	0.10 . . . 0.17 (0.0039 . . . 0.0067)			

Engine

Specifications (1981 models)

Model	R 100	R 100 CS	R 100 RT	R 100 RS
Rotor height mm (in)	$14^{-0.015}_{-0.045}$ ($0.5512^{-0.0006}_{-0.0018}$)			
Housing depth mm (in)	$14^{+0.025}_{+0.010}$ ($0.5512^{+0.0010}_{-0.0004}$)			
Clearance between joint face on pump housing and sealing face on rotor mm (in)	0.025 . . . 0.070 (0.0010 . . . 0.0028)			
Gap between inner and outer rotors mm (in)	0.12 . . . 0.20 (0.0047 . . . 0.0079)			
Max. wear depth in cover mm (in)	0.05 (0.0020)			
Relaxed length of pressure relief spring mm (in)	68 (2.677)			
Valve clearances: Adjust with engine cold				
Inlet mm (in)		0,15 (0.005)	0.10 (0.004)	after the 1000 km (600 mile) Inspection
Exhaust mm (in)		0.25 (0.01)	0.20 (0.008)	
Valve timing (tolerance ± 2.5°)	Timing gear shaft setting at 2 mm (0.08 in) valve clearance (308° camshaft)			
Inlet opens	16° bTDC			
Inlet closes	44° aBDC			
Exhaust opens	56° bBDC			
Exhaust closes	4° aTDC			
Valve: Overall length				
Inlet mm (in)	98.8 – 0.4 (3.890 – 0.016)			
Exhaust mm (in)	98.8 – 0.4 (3.890 – 0.016)			
Valve head dia. Inlet mm (in)	44 (1.732)			
Valve head dia. Exhaust mm (in)	40 (1.575)			
Valve stem dia. Inlet and exhaust mm (in)	$8^{-0.050}_{-0.065}$ ($0.3150^{-0.0020}_{-0.0026}$)			

Engine

Specifications (1981 models)

Model	R 100	R 100 CS	R 100 RT	R 100 RS
Exhaust mm (in)	$8^{-0.050}_{-0.065}$			
Min. valve head rim thickness				
Inlet mm (in)	1 (0.04)			
Exhaust mm (in)	1 (0.04)			
Max. valve head runout mm (in)	0.025 (0.0010)			
Valve seat ring: Extl. dia. Inlet and exhaust mm (in)	$45.2^{0}_{-0.025}$ ($1.780^{0}_{-0.001}$)			
Bore in cylinder head for valve seat ring Inlet mm (in)	$45^{+0.025}_{0}$ ($1.772^{+0.001}_{0}$)			
Exhaust mm (in)	$43^{+0.025}_{0}$ ($1.772^{+0.001}_{0}$)	$43^{+0.025}_{0}$ ($1.772^{+0.001}_{0}$)		
Shrink fit in cylinder head				
Inlet mm (in)	0.15 . . 0.20 (0.006 . . 0.008)			
Exhaust mm (in)	0.11 . . 0.15 (0.004 . . 0.006)			
Valve seat angle °	45			
Valve seat width: Inlet mm (in)	1.5 (0.059)			
Exhaust mm (in)	1.5 (0.059)			

Engine

Specifications (1981 models)

Model	R 100	R 100 CS	R 100 RT	R 100 RS
Valve seat ring oversize mm (in)	0.2 (0.0079)			
Valve guides: Overall length mm (in) Inlet	48 (1.8898)			
Exhaust	48 (1.8898)			
Extl. dia. mm (in)	$14.1^{+0.061}_{+0.050}$ $(0.551^{+0.0024}_{+0.0020})$			
Intl. dia. mm (in)	8 (0.3150) H 7			
Bore in cylinder head mm (in)	14 (0.5512) H 7			
Shrink fit in cylinder head mm (in)	0.032 . . . 0.061 (0.0013 . . . 0.0024)			
Oversizes, stage 1 mm (in)	$14.1^{+0.061}_{+0.050}$ $(0.555^{+0.0024}_{+0.0020})$			
stage 2 mm (in)	$14.2^{+0.061}_{+0.050}$ $(0.559^{+0.0024}_{+0.0020})$			
Valve stem clearance Inlet mm (in)	0.050 . . . 0.080 (0.0020 . . . 0.0031)			
Exhaust mm (in)	0.050 . . . 0.080 (0.0020 . . . 0.0031)			
Max. clearance after wear mm (in)	0.15 (0.006)			
Valve gear Valve operation	From camshaft, via chill-cast tappets, pushrods and rockers			
Camshaft drive	3/8 x 7/32" single roller chain with spring link			
Number of chain links	50			

3.82 Addition

Engine

Specifications (1981 models)

Model	R 100	R 100 CS	R 100 RT	R 100 RS
Valve springs: Wire thickness mm (in)	4.25 (0.167)			
Extl. coil dia. mm (in)	31.9 (1.256)			
Relaxed spring length mm (in)	app. 43.5 (1.713)			
Spring force in kp (lb.f) at test length mm (in)	29 (63.9) at 37.6 (1.480), 70 (154.3) at 28.5 (1.122)			
Winding direction	clockwise (right-hand)			
Number of active spring turns	4			
Total number of spring turns	6			
Installed direction	green stripe on windings at cylinder head side			
Rockers:	with needle roller bearings			
Axial play	zero, but free-moving			
Rocker leverage ratio	1 : 1.39			

Engine

Specifications (1981 models)

Model	R 100	R 100 CS	R 100 RT	R 100 RS
Camshaft				
Flange bearing bore in engine block mm (in)	$40^{+0.039}_{0}$		$(1.5748^{+0.0016}_{0})$	
Flange bearing extl. dia. mm (in)	$40^{0}_{-0.016}$		$(1.5748^{0}_{-0.0006})$	
Flange bearing bore mm (in)	$25^{+0.013}_{0}$		$(0.9842^{+0.0005}_{0})$	
Camshaft bearing journal dia., generator end mm (in)	$25^{-0.020}_{-0.033}$		$(0.9842^{-0.0008}_{-0.0013})$	
Camshaft bearing bore in engine block, flywheel end mm (in)	$24^{+0.021}_{0}$		$(0.9449^{+0.0008}_{0})$	
Camshaft bearing journal dia., flywheel end mm (in)	$24^{-0.020}_{-0.033}$		$(0.9449^{-0.0008}_{-0.0013})$	
Radial play at generator and flywheel ends mm (in)	0.02 . . . 0.046 (0.008 . . . 0.0018)			
Axial play (endplay between camshaft thrust collar and flange bearing) mm (in)	0.1 . . . 0.02 (0.0039 . . . 0.0008)			
Cam base circle mm (in)	28 (1.102)			
Cam lift mm (in)	6.756 (0.266)			
Tappet extl. dia. mm (in)	$22^{-0.025}_{-0.045}$		$(0.8661^{-0.0010}_{-0.0018})$	
Tappet bore in engine block mm (in)	$22^{+0.006}_{-0.015}$		$(0.8661^{+0.0002}_{-0.0006})$	
Tappet radial clearance mm (in)	0.01 . . . 0.051 (0.0004 . . . 0.0020)			
Max. tappet wear clearance mm (in)	0.075 (0.0030)			
Length of pushrods mm (in)	275 ± 0.3 (10.827 ± 0.012)			

Engine

Specifications (1981 models)

Model			R 100	R 100 CS	R 100 RT	R 100 RS
Crankshaft and bearings: Crankshaft			Main bearing journal dia. mm (in) Generator end		Flywheel end	
Crankshaft markings		red/red	59.980 . . 59.990 (2.3614 . . 2.3618)		59.980 . . 59.990 (2.3614 . . 2.3618)	
Standard	0	red/blue	59.980 . . 59.990 (2.3614 . . 2.3618)		59.971 . . 59.980 (2.3611 . . 2.3614)	
		blue/red	59.971 . . 59.980 (2.3611 . . 2.3614)		59.980 . . 59.990 (2.3614 . . 2.3618)	
		blue/blue	59.971 . . 59.980 (2.3611 . . 2.3614)		59.971 . . 59.980 (2.3611 . . 2.3614)	
Stage 1	0.25 mm (0.0098 in)	red/red	59.730 . . 59.740 (2.3516 . . 2.3520)		59.730 . . 59.740 (2.3516 . . 2.3520)	
		red/blue	59.730 . . 59.740 (2.3516 . . 2.3520)		59.721 . . 59.730 (2.3512 . . 2.3516)	
		blue/red	59.721 . . 59.730 (2.3512 . . 2.3516)		59.730 . . 59.740 (2.3516 . . 2.3520)	
		blue/blue	59.721 . . 59.730 (2.3512 . . 2.3516)		59.721 . . 59.730 (2.3512 . . 2.3516)	
Stage 2	0.50 mm (0.0197 in)	red/red	59.480 . . 59.490 (2.3417 . . 2.3421)		59.480 . . 59.490 (2.3417 . . 2.3421)	
		red/blue	59.480 . . 59.490 (2.3417 . . 2.3421)		59.471 . . 59.480 (2.3414 . . 2.3417)	
		blue/red	59.471 . . 59.480 (2.3414 . . 2.3417)		59.480 . . 59.490 (2.3417 . . 2.3421)	
		blue/blue	59.471 . . 59.480 (2.3414 . . 2.3417)		59.471 . . 59.480 (2.3414 . . 2.3417)	
Stage 3	0.75 mm (0.0295 in)	red/red	59.230 . . 59.240 (2.3319 . . 2.3323)		59.230 . . 59.240 (2.3319 . . 2.3323)	
		red/blue	59.230 . . 59.240 (2.3319 . . 2.3323)		59.221 . . 59.230 (2.3315 . . 2.3319)	
		blue/red	59.221 . . 59.230 (2.3315 . . 2.3319)		59.230 . . 59.240 (2.3319 . . 2.3323)	
		blue/blue	59.221 . . 59.230 (2.3315 . . 2.3319)		59.221 . . 59.230 (2.3315 . . 2.3319)	
Bore for 3-layer bearing shell in engine block mm (in)			$65^{+0.019}_{0}$ $(2.5591^{+0.0007}_{0})$			
Bore for 3-layer bearing in bearing cap mm (in)			$65^{+0.019}_{0}$ $(2.5591^{+0.0007}_{0})$			
Main bearing journal radial clearance mm (in)			Red 0.017 . . 0.066 (0.00067 . . 0.00260)		Blue 0.019 . . 0.067 (0.00075 . . 0.00264)	
Seat dia. for front crankshaft deep-groove ball bearing mm (in)			$35^{+0.025}_{+0.009}$ $(1.3780^{+0.0010}_{+0.0004})$			
Bearing seat bore for deep-groove ball bearing in timing chain cover mm (in)			$62^{-0.009}_{-0.39}$ $(2.4409^{-0.0004}_{-0.0154})$			

Specifications (1981 models)

Model	R 100	R 100 CS	R 100 RT	R 100 RS
Main bearing bushing: Wall thickness mm (in) Standard 0 red / blue	2.500 ... 2.510 (0.0984 ... 0.0988) 2.504 ... 2.514 (0.0986 ... 0.0990)			
Stage 1 0.25 mm (0.0098 in) red / blue	2.625 ... 2.635 (0.1033 ... 0.1037) 2.629 ... 2.639 (0.1035 ... 0.1039)			
Stage 2 0.50 mm (0.0197 in) red / blue	2.750 ... 2.760 (0.1083 ... 0.1087) 2.754 ... 2.764 (0.1084 ... 0.1088)			
Stage 3 0.75 mm (0.0295 in) red / blue	2.875 ... 2.885 (0.1132 ... 0.1136) 2.879 ... 2.889 (0.1133 ... 0.1137)			
Engine block: mm (in)	Diameter A = main bearing bores: 65 (2.5591) H 6 65.000 ... 65.019 (2.5591 ... 2.5598)		Diameter B = bearing cap bores: $130^{+0.026}_{-0.007}$ ($5.1181^{+0.0010}_{-0.0003}$) 129.933 ... 130.026 (5.1178 ... 5.1191)	
Main bearing diameter with bearing pressed in mm (in)	Red 60.007 ... 60.046 (2.3625 ... 2.3640)		Blue 59.999 ... 60.038 (2.3622 ... 2.3637)	
Bearing caps:	65.000 ... 65.019 (2.5591 ... 2.5598)		130.003 ... 130.028 (5.1182 ... 5.1192)	

Specifications (1981 models)

Model	R 100	R 100 CS	R 100 RT	R 100 RS
Seat dia. on crankshaft for chain sprocket mm (in)	$35.003^{+0.020}_{+0.009}$ ($1.3781^{+0.0008}_{+0.0004}$)			
Chain sprocket mounting bore mm (in)	$35.003^{+0.003}_{-0.013}$ ($1.3781^{+0.0001}_{-0.0005}$)			
Crankshaft endplay mm (in)	0.08 ... 0.15 (0.0031 ... 0.0059)			
Thrust washer red thickness "S" mm (in) blue thickness "S" mm (in) green thickness "S" mm (in) yellow thickness "S" mm (in) Max. play after wear mm (in)	2.483 ... 2.530 (0.0978 ... 0.0996) 2.530 ... 2.578 (0.0996 ... 0.1015) 2.578 ... 2.626 (0.1015 ... 0.1034) 2.626 ... 2.673 (0.1034 ... 0.1052) 0.20 (0.0079)			
Max. permissible runout at outer shaft journal (generator end when supported at main bearings) mm (in)	0.02 (0.0008)			
Max. permissible crankshaft imbalance (dynamic) without flywheel cmp	20			
Max. flywheel lateral runout mm (in)	0.1 (0.004)			
Connecting rods and bearings:	Crankpin dia. mm (in)			
Standard 0	$48.00^{-0.009}_{-0.025}$ ($1.8898^{-0.0004}_{-0.0010}$)			
Stage 1 0.25 mm (0.010 in)	$47.75^{-0.009}_{-0.025}$ ($1.8799^{-0.0004}_{-0.0010}$)			
Stage 2 0.50 mm (0.020 in)	$47.50^{-0.009}_{-0.025}$ ($1.8701^{-0.0004}_{-0.0010}$)			
Stage 3 0.75 mm (0.030 in)	$47.25^{-0.009}_{-0.025}$ ($1.8602^{-0.0004}_{-0.0010}$)			
Big end bearing bore mm (in)	$52^{+0.015}_{0}$ ($2.0472^{+0.0006}_{0}$)			
Big end bearing radial clearance mm (in)	0.023 ... 0.069 (0.0009 ... 0.0027)			
Big end bearing width mm (in)	$22^{-0.065}_{-0.117}$ ($0.8661^{-0.0026}_{-0.0046}$)			
Crankpin bearing width mm (in)	$22^{+0149}_{+0.065}$ ($0.8661^{+0.0059}_{+0.0026}$)			
Connecting rod axial play mm (in)	0.130 ... 0.266 (0.0051 ... 0.0105)			
Max. axial play after wear mm (in)	0.32 (0.0126)			

Engine

Specifications (1981 models)

Model	R 100 T	R 100 CS	R 100 RT	R 100 RS
Distance between centers mm (in)	135 (5.315)			
Small-end bore (basic dimension) mm (in)	$24^{+0.021}_{0}$ $(0.9449^{+0.0008}_{0})$			
Small-end bushing extl. dia. mm (in)	24.060 . . . 24.100 (0.9472 . . . 0.9488)			
Bore in small-end bushing for piston pin mm (in)	$22^{+0.020}_{+0.015}$ $(0.8661^{+0.0008}_{+0.0006})$			
Bore in small-end bushing for piston pin, wear limit mm (in)	22 + 0.040 (0.8661 + 0.0016)			
Max. deviation from parallel of connecting rod bores with bearing shells at 150 mm (5.91 in) spacing mm (in)	0.04 (0.0016)			
Max. connecting rod bore twist at 150 mm (5.91 in) spacing mm (in)	1.5 (0.06)			
Permissible weight difference between the two connecting rods of the engine g (oz)	± 3 (± 0.106)			
Cylinders: Bore, initial value A mm (in)	94.005 + 0.01 (3.7010 + 0.0004)			
B mm (in)	94.015 + 0.01 (3.7014 + 0.0004)			
C mm (in)	94.025 + 0.01 (3.7018 + 0.0004)			
Surface roughess um µm	1.5			

3.82 Addition

3.82 Addition

Engine

Specifications (1981 models)

Model	R 100	R 100 CS	R 100 RT	R 100 RS
Permissible out-of-roundness of cylinder bore mm (in)	0.01 (0.0004)			
Permissible conicity of cylinder bore (narrower at top) mm (in)	0.02 (0.0008)			
Pistons: Pattern	Raised oval convex			
Weight group of complete piston	stamped with + or –			
Piston dia. (original equipment) A mm (in)	93.960 (3.6992)			
B mm (in)	93.970 (3.6996)			
C mm (in)	93.980 (3.7000)			
Installed piston clearance mm (in) clearance mm (in)	0.030 0.040 (0.0012 0.0016)			
Max. permissible clearance between piston and cylinder caused by wear mm (in)	0.08 (0.0031)			
Direction of piston installation	Arrow and "vorn" (front) inscription pointing to front of motorcycle			

Engine

Specifications (1981 models)

Model	R 100	R 100 CS	R 100 RT	R 100 RS
Piston rings 1st groove – micro-chamfer ring[1]) Height mm (in)	$1.75^{-0.010}_{-0.022}$ ($0.0689^{-0.0004}_{-0.0009}$)			
Ring end gap mm (in)	0.40 . . . 0.65 (0.016 . . . 0.026)			
Clearance in groove mm (in)	0.06 . . . 0.09 (0.0024 . . . 0.0035)			
2nd groove – stepped microchamfer ring[1]) Height mm (in)	$2.00^{+0.010}_{+0.022}$ ($0.0787^{+0.0004}_{+0.0009}$)			
Ring end gap mm (in)	0.40 . . . 0.65 (0.016 . . . 0.026)			
Clearance in groove mm (in)	0.04 . . . 0.07 (0.0016 . . . 0.0028)			
3rd groove – penthouse-chamfer ring with tubular spring[1]) Height mm (in)	$4.00^{+0.010}_{+0.022}$ ($0.1575^{+0-0004}_{+0.0009}$)			
Ring end gap mm (in)	0.25 . . . 0.40 (0.010 . . . 0.016)			
Clearance in groove mm (in)	0.03 . . . 0.06 (0.0012 . . . 0.0024)			
Piston ring installed direction	With inscription (top) to front (grooves 1 and 2)			

[1]) not to DIN standard
– special BMW version

Engine

Specifications (1981 models)

Model	R 100	R 100 CS	R 100 RT	R 100 RS
Piston pin: Offset from piston centerline mm (in)	1.0 (0.04)			
Piston pin diameter mm (in)	$22^{-0.004}$ ($0.8661^{-0.0002}$)			
Piston pin eye bore mm (in)	$22^{+0.004}$ ($0.8661^{+0.0002}$)			
Piston pin clearance[1]) in piston mm (in)	0.000 0.008 (0.0000 0.0003)			
Piston pin running clearance in small end bushing mm (in)	0.015 0.025 (0.00059 0.00098)			

[1]) Always renew piston and piston pin together

Specifications (1981 models)

Tightening torques Nm (lb.ft)

Cylinder head nuts (in 3 stages)	5	(11)
	25	(18.5)
	35 + 4	(26 + 3)
	50 + 2	(37 + 1.5)
Big end bolts	100 + 5	(74 + 3.7)
Clutch housing (flywheel) to crankshaft		
Valve adjusting screw nut	20 ± 2	(14.7 ± 1.5)
Carburettor threaded stub pipes	50	(37)
Oil drain plug	30 + 5	(22 + 3.7)

All other bolts and nuts are to be tightened to the customary values as shown in manufacturers' tables or on the latest BMW 60002.0 standards sheet.

Measurement report for main bearing clearances

(see also Service Information (Group: Engine) 11 015 80 (146 R)

Model: Frame No. Speedometer reading

Order No.: Appendix to warranty claim No.

Measuring main bearing journals:

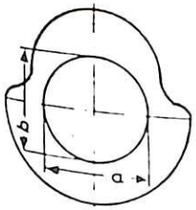

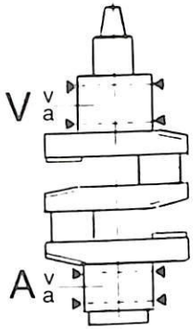

Using an external micrometer, measure front main bearing journal V and rear main bearing journal H in directions a and b (in each case three times at the same point) and in planes Vv, Vh, Hv and Hh. This yields 24 individual readings, which should be entered in the table below. Then calculate the mean values as indicated.

Measuring planes			a	b	Cross-total	Mean value for ÷ 6 = main bearing journals
59. . . . mm (2.3 . . . in)	V	v			÷ 6 =	≙ 59. . . . mm (2.3 . . . in)
		h			÷ 6 =	≙ 59. . . . mm (2.3 . . . in)
	H	v			÷ 6 =	≙ 59. . . . mm (2.3 . . . in)
		h			÷ 6 =	≙ 59. . . . mm (2.3 . . . in)

Measuring the main bearing shells:

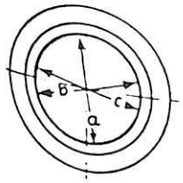

Measure the main bearing shells in directions a, b and c. Mark the engine block or bearing cap precisely as illustrated. Proceed otherwise as described above. This will yield 36 individual readings, which should be entered in the table below. Then calculate the mean values as indicated.

Measuring planes			a	b	c	Cross-total	Mean value for ÷ 9 = main bearing shells
60.0 . . mm (2.3 . . . in)	V	v				÷ 9 =	≙ 60.0 . . mm (2.3 . . . in)
		h				÷ 9 =	≙ 60.0 . . mm (2.3 . . . in)
	H	v				÷ 9 =	≙ 60.0 . . mm (2.3 . . . in)
		h				÷ 9 =	≙ 60.0 . . mm (2.3 . . . in)

Calculating main bearing clearances:

Desired value = 0.020 . . . 0.065 mm (0.0008 . . . 0.0026 in)

Measurements		Bearing shell dia.		Journal dia.		Bearing clearance
V	v		minus		=	mm (in)
	h		minus		=	mm (in)
H	v		minus		=	mm (in)
	h		minus		=	mm (in)

(Date) (Tester's signature)

Valve gear

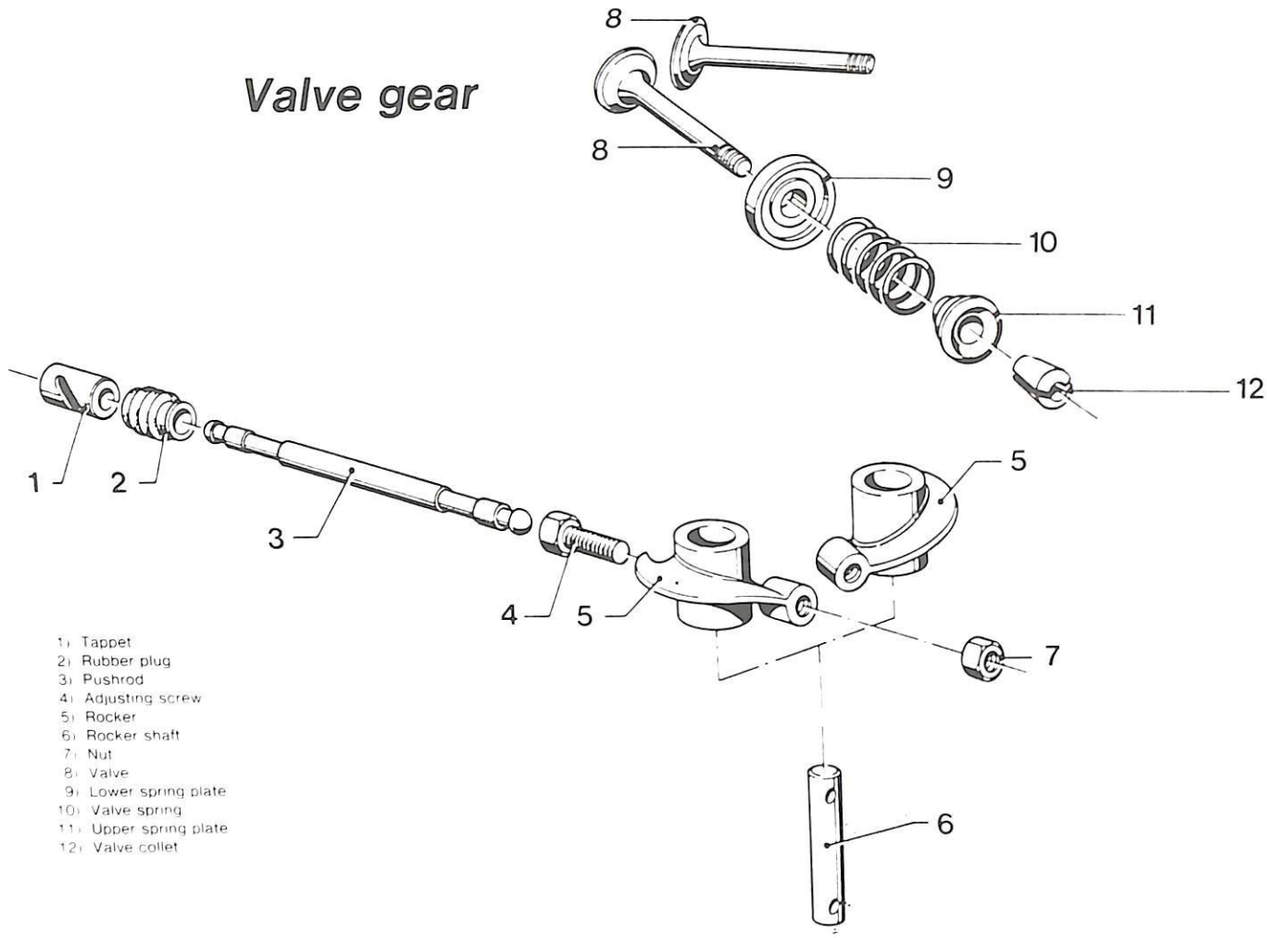

1) Tappet
2) Rubber plug
3) Pushrod
4) Adjusting screw
5) Rocker
6) Rocker shaft
7) Nut
8) Valve
9) Lower spring plate
10) Valve spring
11) Upper spring plate
12) Valve collet

Camshaft and timing chain

(from 1979 models on)

1) Camshaft chain sprocket
2) Hex bolt
3) Snap ring
4) Flange bearing
5) Key
6) Camshaft
7) Timing chain
8) Lock washer
9) Chain tensioner
10) Spring
11) Plunger
12) Slide rail
13) Hex bolt
14) Snap ring

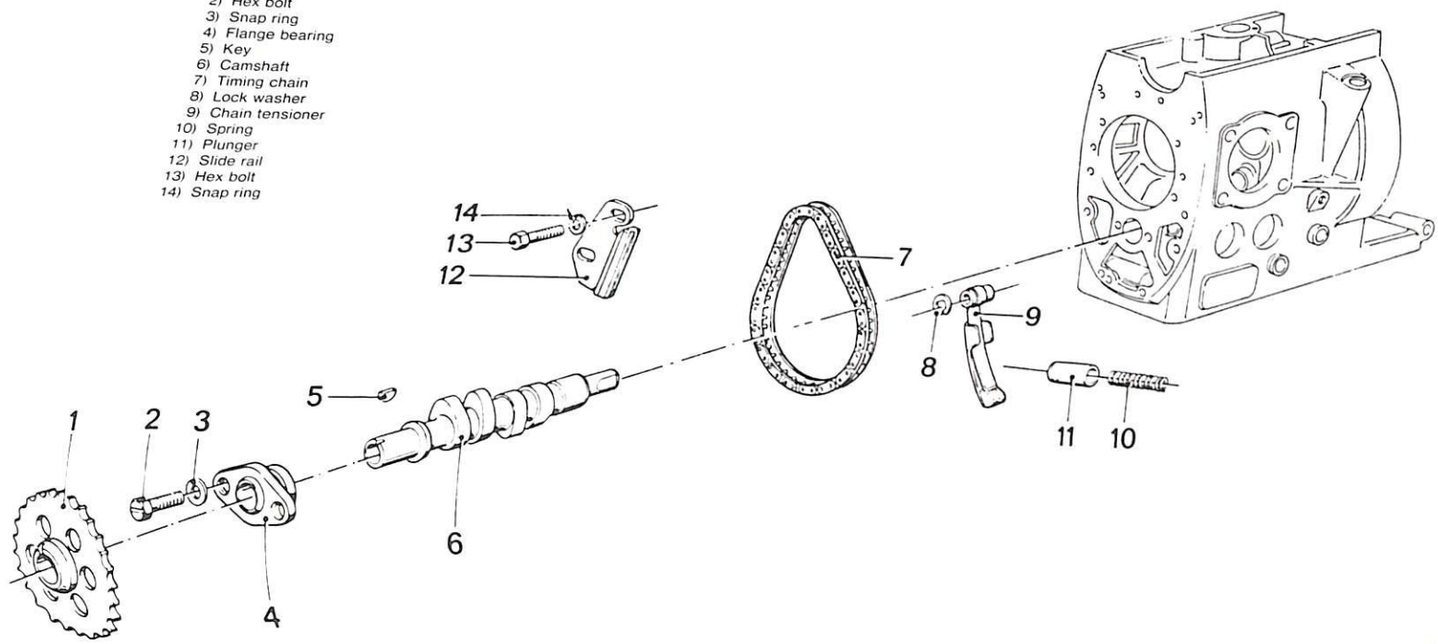

3.82 Addition

Crankshaft and bearings (from 1981 models on)

3.82 Addition

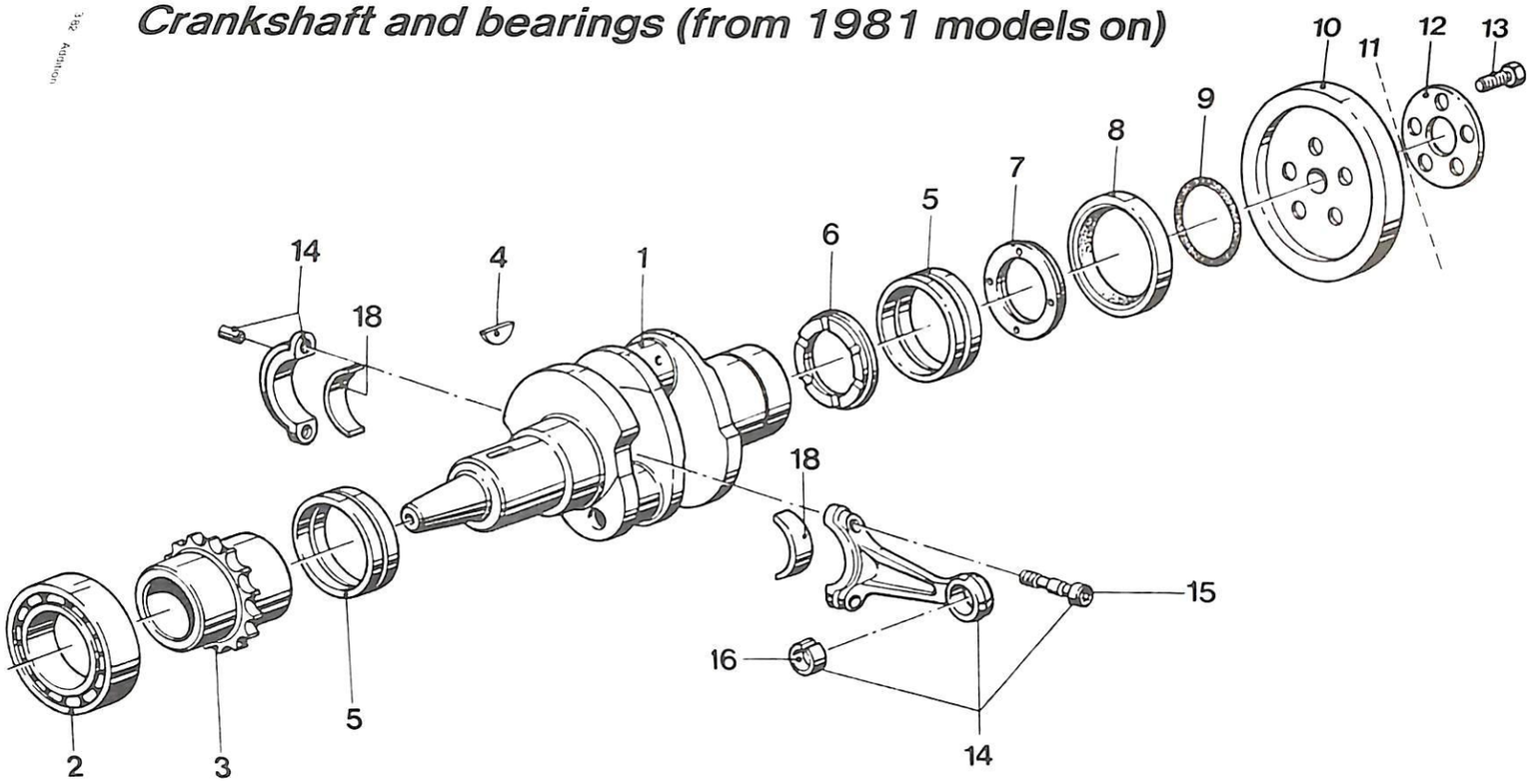

1) Crankshaft
2) Deep-groove ball bearing
3) Chain sprocket
4) Key
5) Main bearing shell
6) Thrust bearing, inner
7) Thrust bearing, outer
8) Shaft sealing ring
9) O-ring
10) Thrust ring
11) Clutch housing
12) Locating disc
13) Hex bolt
14) Connecting rod
15) Big end bolt
16) Small end bushing
17) Peg
18) Big end bearing shell

Crankshaft and bearings

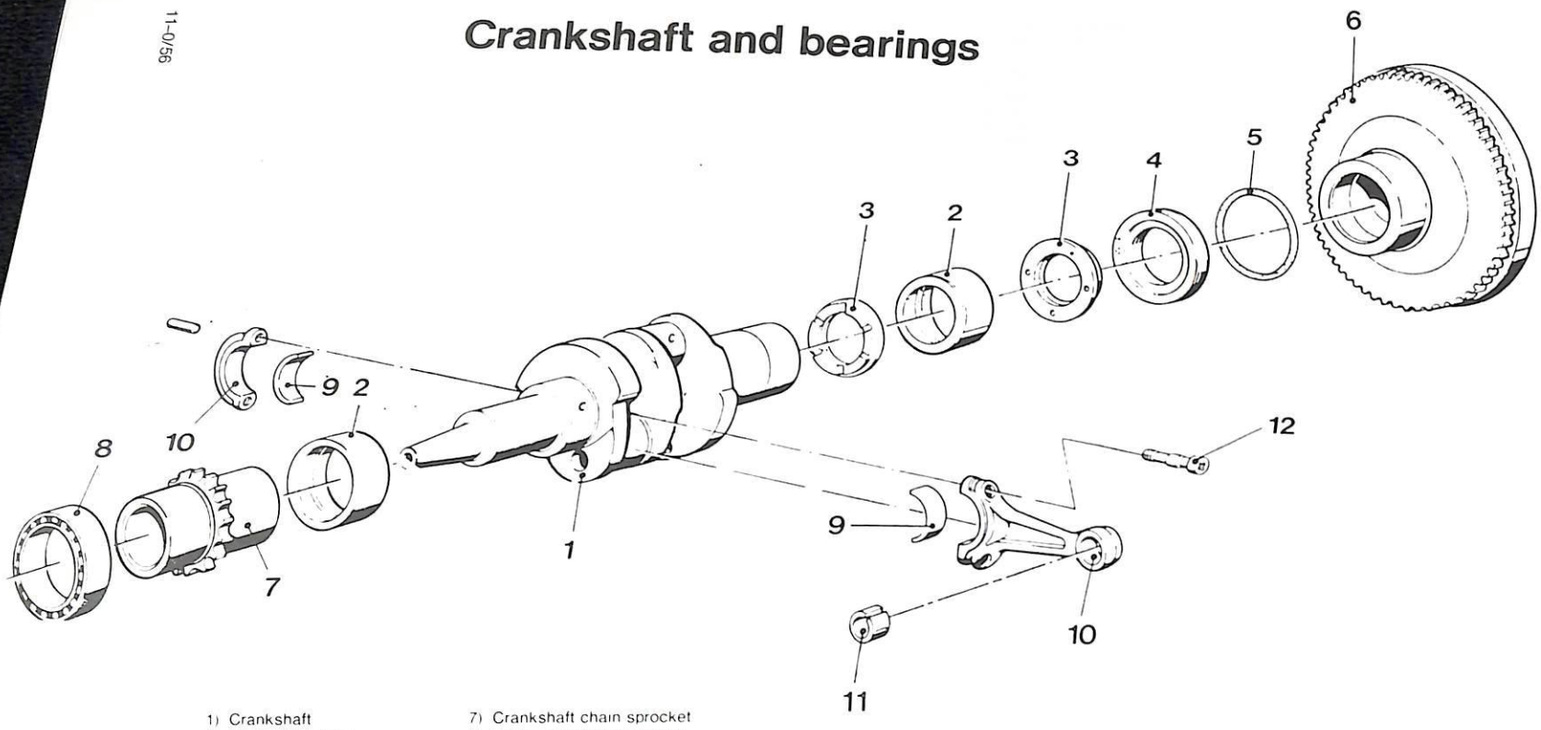

1) Crankshaft
2) Bearing bushing
3) Thrust washer
4) Shaft sealing ring
5) Cord ring seal
6) Flywheel
7) Crankshaft chain sprocket
8) Deep-groove ball bearing
9) Big end bearing shells
10) Connecting rod
11) Small end bushing
12) Big end bolts

3.82 Addition

3.82 Addition

Oil cooler

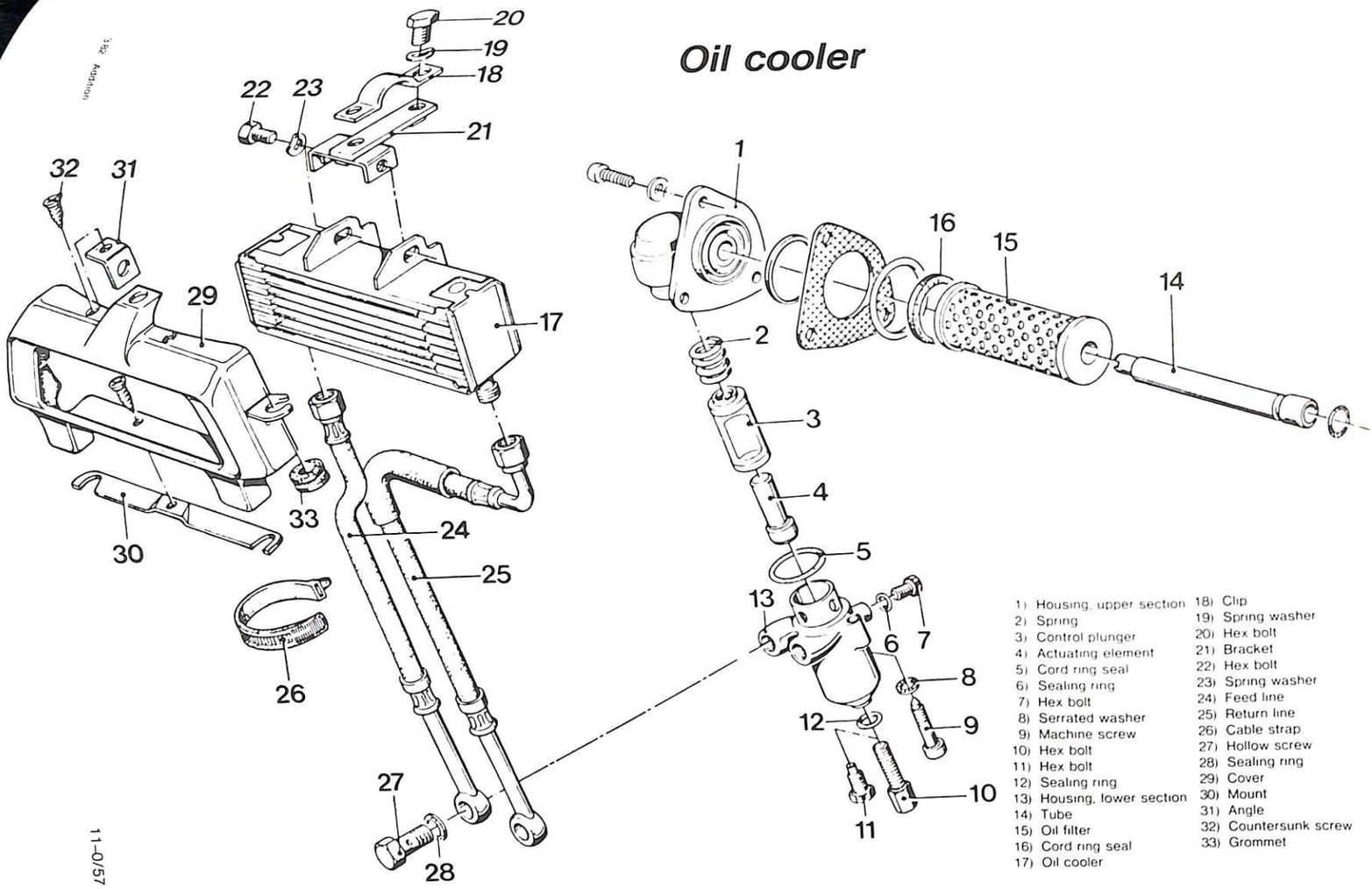

1) Housing, upper section
2) Spring
3) Control plunger
4) Actuating element
5) Cord ring seal
6) Sealing ring
7) Hex bolt
8) Serrated washer
9) Machine screw
10) Hex bolt
11) Hex bolt
12) Sealing ring
13) Housing, lower section
14) Tube
15) Oil filter
16) Cord ring seal
17) Oil cooler
18) Clip
19) Spring washer
20) Hex bolt
21) Bracket
22) Hex bolt
23) Spring washer
24) Feed line
25) Return line
26) Cable strap
27) Hollow screw
28) Sealing ring
29) Cover
30) Mount
31) Angle
32) Countersunk screw
33) Grommet

Oil filter – methods of assembly

Old version: with paper gasket and steel washer

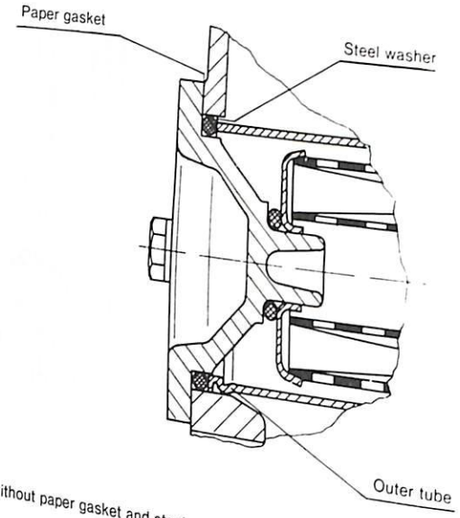

New version: without paper gasket and steel washer; with crimped end to outer tube

New oil filter with square-section rings attached with adhesive

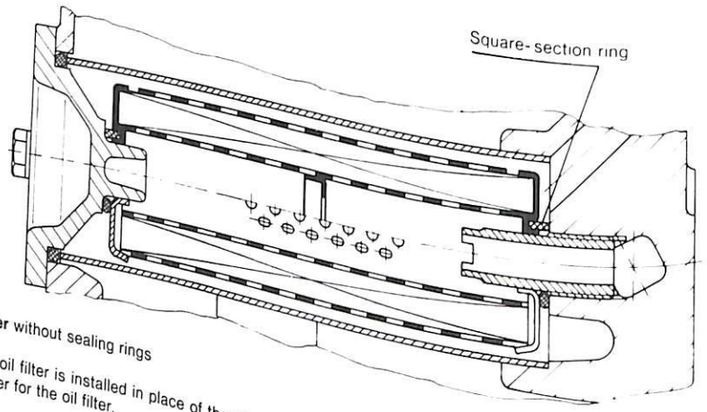

Old oil filter without sealing rings

If the new oil filter is installed in place of the old type, remove the sealing rings in the base of the filter housing and on the cover for the oil filter.

New oil filter with connecting hinge

This filter element is easier to install on motorcycles with RS or RT fairings.

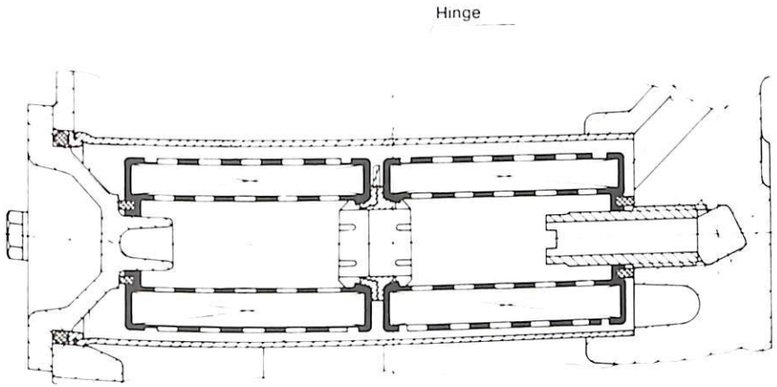

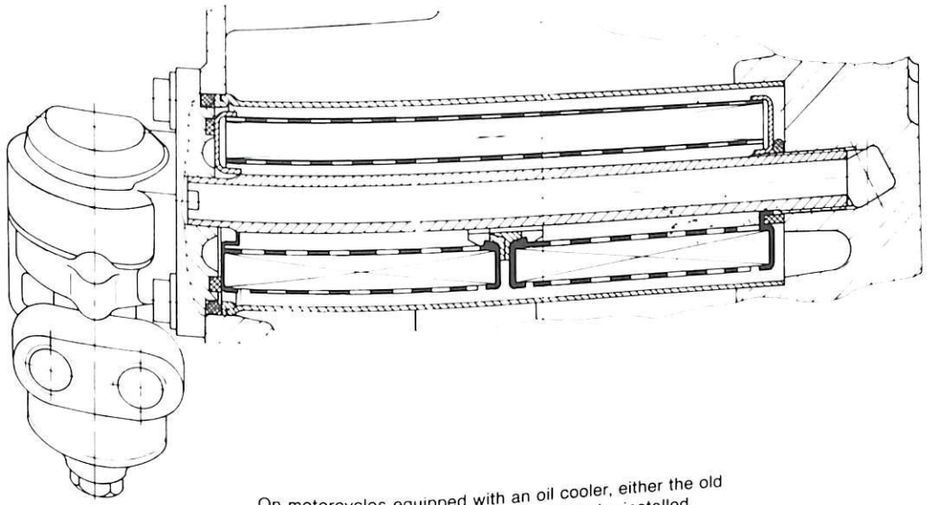

On motorcycles equipped with an oil cooler, either the old or the new filter element (with hinge) can be installed. The existing O-ring is provided to act as a seal at the filter head. **Important:** if using the hinged filter element, remove the sealing ring from inside the filter housing.

11 00 039 Compression test – all cylinders

1. Unscrew and remove the spark plugs.

   Measure with a calibrated compression tester. The battery must be fully charged, the engine at normal operating temperature and the throttle twistgrip fully open.
   Turn the engine over with the starter motor.

Important on models from 1981 on: the ignition circuit must be interrupted (plug connector at ignition unit – see 12 11 004).

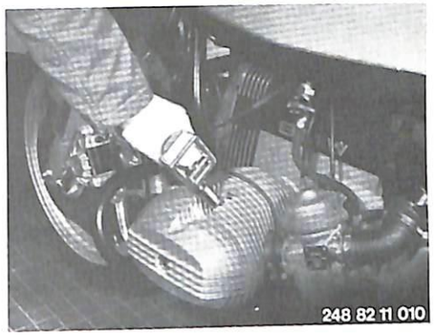

Pen recording card for compression tester.

For compression values, see Specifications.

E81 11 011

11 00 050 Engine – removing and installing

Remove (install) exhaust system – 18 00 020.

Remove (install) gearbox – 23 00 020.

Detach (attach) fuel tank – 16 11 030.

Lower the engine with the jack.

Detach right carburettor from cylinder head and place both carburettors on top of the battery. Detach the spark plug caps and place the leads over the frame.

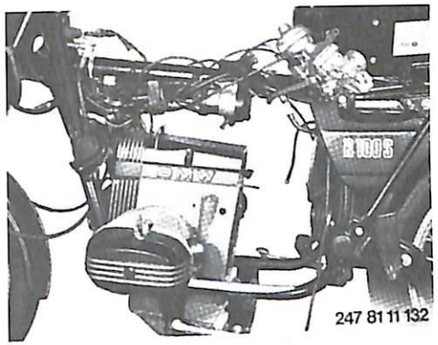

247 81 11 132

Detach multi-pin plug from control unit. Separate plug connectors (1) and (2) and detach multi-pin plug at regulator (arrow).

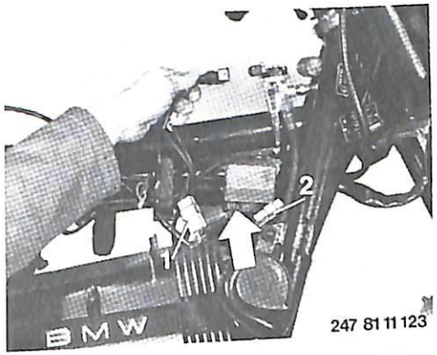

247 81 11 123

Take off the starter motor cover and disconnect the battery + (positive) lead from the starter (arrow).

Remove the right coil.

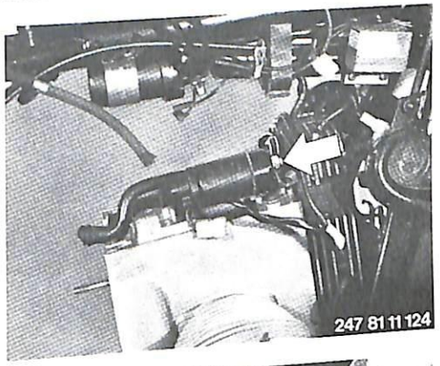
247 81 11 124

Move the engine back fully, raise it and tilt to the right (looking forwards) to remove it from the frame.

247 81 11 125

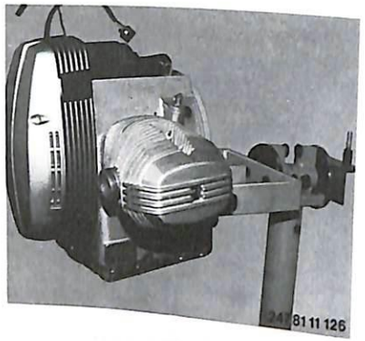

Install the engine in BMW fixture 11 0 600 on BMW assembly stand 00 1 490, and secure with 2 bolts.

■

11 11 050 Cylinder – removing and installing

Remove (install) cylinder head – 11 12 080.

Dislodge the cylinder with blows of a plastic-faced hammer, and pull away from engine block.

Note: make sure that the piston does not strike the engine block as the cylinder is pulled off.

■

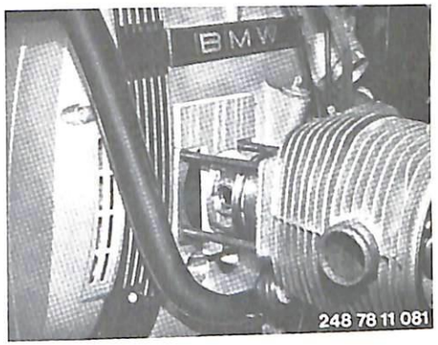

Whenever the cylinder is removed, the O-ring at the base of the cylinder (1) and the O-ring at the upper stud (2) must be renewed.

When installing: coat the base of the cylinder with Hylomar, Caril-T or Dirko sealant. For models from 1981 on, do not use any liquid sealant.

■

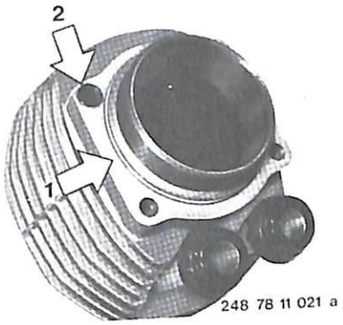

To insert the piston into the cylinder, use piston ring clamp BMW No. 11 2 915.

■

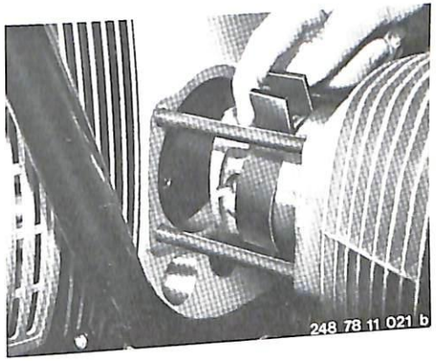

11 11 527 Cylinder – reboring and honing

(not permissible from 1981 models on)

Remove (install) cylinder head – 11 12 080.

Remove (install) piston – 11 25 000.

All the preliminary testing and repair work is to be carried out only if needed.

Cylinder can be rebored in two stages. For oversizes, see Specifications.

For reasons of thermal conductivity, a third rebore stage is not permitted. Measure oversize cylinders at the cylinder base. Determine piston oversize according to measured diameter of cylinder bore. For installed piston clearances, see Specifications. ■

If the pushrod outer tubes are leaking at the rubber sleeve, the contact rings can be driven further in to improve the rubber sleeve contact pressure, using driver tube BMW No. 11 1 600.

Note: from 1981 models on, the protective tube contact rings **can no longer be driven in,** since the rings are brazed into position.

■

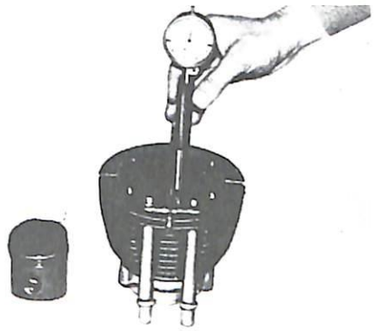

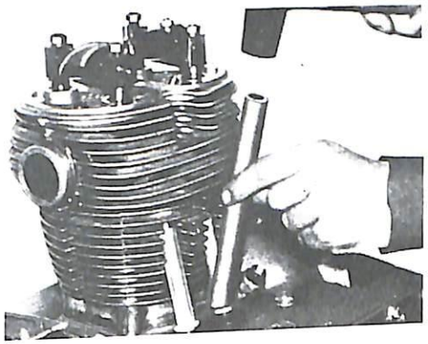

11 12 080 Cylinder head – removing and installing

Engine removed (11 00 050) or installed

If engine remains installed, take off the exhaust system.

Remove the carburettor

Unscrew the cap nut and the two nuts (arrows). Take off the rocker cover and the gasket

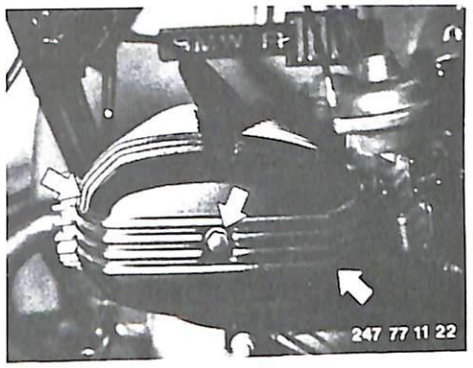

■

Unscrew the 4 shouldered nuts and remove the two rockers fron the tie-rods.
Pull out the pushrods.

■

Unscrew the two hex nuts (arrows). Using a plastic-faced hammer, dislodge the cylinder head from the cylinder, and pull it off the tie-rods.

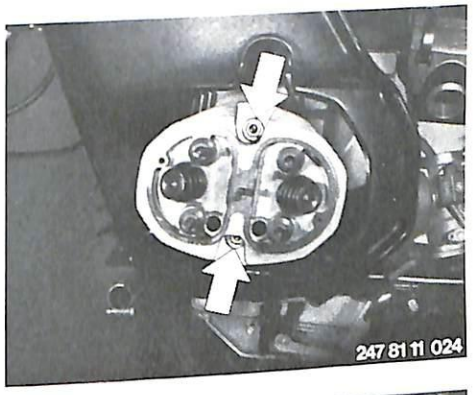

■

Tighten the cylinder head nuts with the engine cold in three stages – for tightening order, see illustration. For tightening torque, see Specifications.

When installing: before tightening down the cylinder heads, insert both exhaust pipes with cross-tube into the exhaust ports.

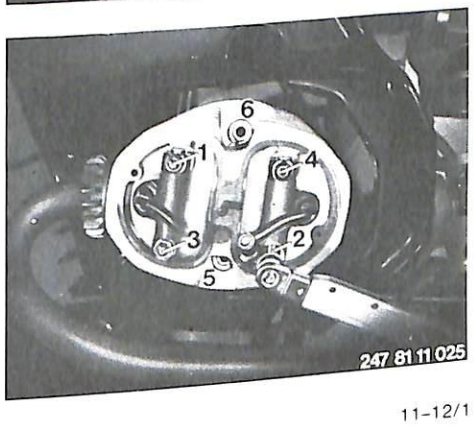

■

11 12 513 Cylinder head – stripping, regrinding valves and assembling

Remove (install) cylinder head – 11 12 080.

Attach valve spring clamp BMW No. 11 1 750, compress the valve spring, take out the valve collet and pull out the valve.

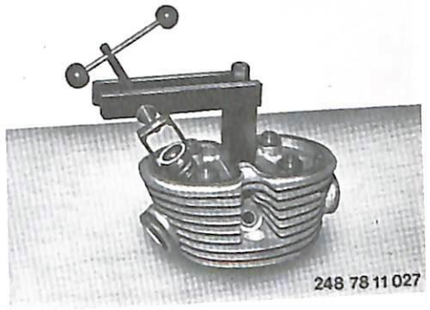

Check cylinder head for:

a) Cracks and poor sealing surfaces
b) Firm seating of valve guides (see illustration) and valve seats
c) Valve guide wear
d) Surface condition of pressure face and ball socket
e) Radial play at rockers
f) Check valve spring lengths and spring force (see Specifications)
g) Check tightness of threaded stub pipes for carburettors.
   If necessary, clean the stub pipe thread and apply Loctite No. 241 before inserting.

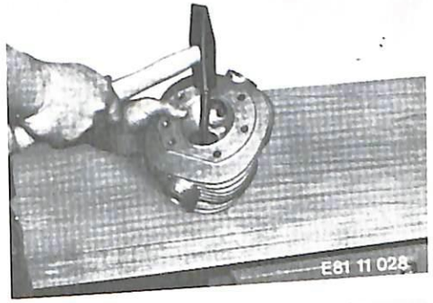

Remachining valve seats

The valve seat rings in the cylinder head can be turned with the 'Hunger' valve seat machining tool. The seat angle is 45° + 20'. The seat contact face width is 1.5 mm (0.06 in) for the inlet valve and 2.0 mm (0.08 in) for the exhaust valve, at a 45° angle. The chamfer towards the combustion chamber is 15°, and towards the exhaust port 75°. The sealing line should be close to the maximum diameter of the valve seat.

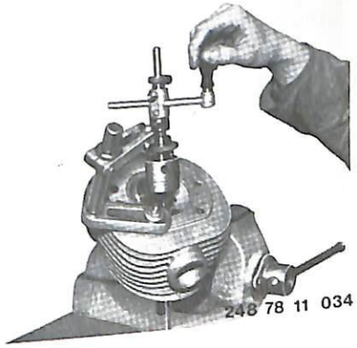

Grind the seat on the valve to 45° 20' on the grinding wheel. Maximum regrinding limit down to 1 mm (0.04 in) valve head rim thickness.

Ground valve heads and valve seat rings machined on the Hunger tool do not have to be lapped in, but after installation of the valves a leak test should be carried out by pouring gasoline (petrol) into the valve chamber.

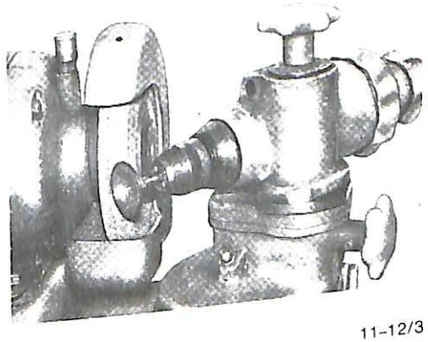

11 12 561 Valve guides – renewing

Remove (install) cylinder head – 11 12 080

Strip down (assemble) cylinder head and regrind valves – 11 12 513

Heat cylinder head to 240 . . . 260° C (464 . . . 500° F) and drive out the valve guide with drift BMW No 11 1 780, working from the combustion chamber

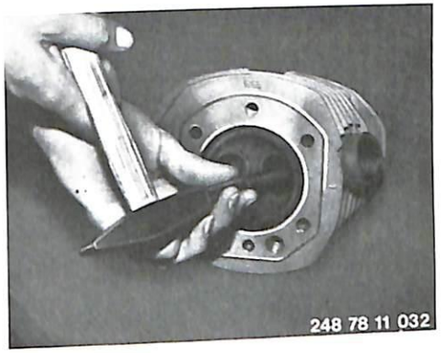

■

Install the new valve guides (for oversizes and bore diameter in cylinder head, see Specifications) with circlips into the cylinder head (heated to 240 . . . 260° C [464 . . . 500° F]) with drift BMW No 11 1 790

After the valve guide has cooled, ream out with fixed reamer 8 mm (0.315 in) H7

■

11 12 621 One valve seat ring – renewing

Cylinder head removed (11 12 080).

Strip down the cylinder head and regrind the valves (11 12 513).

If a valve seat ring has to be renewed after repeated valve seat machining, turn it out completely with the Hunger tool, but do not damage the bore in the cylinder head. Heat the cylinder head to 240 . . . 260° C (464 . . . 500° F) and insert the new valve seat ring (see Specifications).

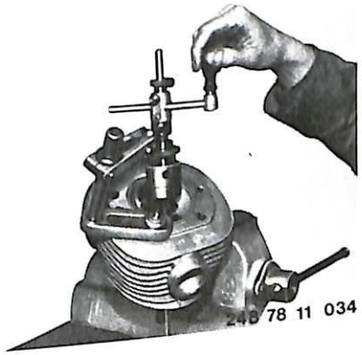

■

11 14 060 Timing chain cover – detaching and attaching (models without ignition trigger)

Engine removed (11 00 050) or installed. Illustrations and descriptions refer to engine removed.

Recondition the alternator (12 31 212).

Renew the breaker points (12 11 141).

Remove the nine Allen screws and three internal-hexagon buts with Allen key.

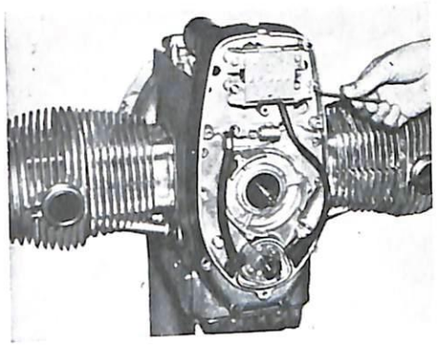

Bolt puller BMW No. 11 1 800 to the tapped retaining holes for the alternator housing with three M 5 Allen screws. Do not forget the thrust head for the puller. Pull off the timing chain cover.

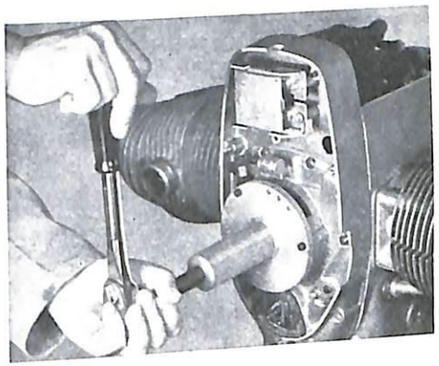

Attaching the timing chain cover

Position the crankcase vertically in the assembly stand, and place the gasket on the housing.

Detach the diode carrier before installing the timing chain cover.

Heat the timing chain cover to 80 ... 100° C (176 ... 212° F).

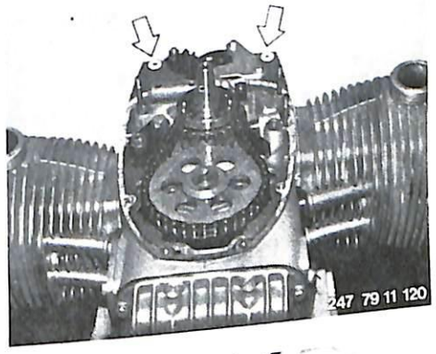

Place sleeve BMW No. 11 1 830 over the centrifugal ignition control shaft. Using centering bushing BMW No. 11 1 830, install the timing chain cover and center it. Tighten the Allen screws and internal hexagon nuts starting from the center. Relieve trapped stresses in the deep-groove ball bearings with a few light blows of a plastic-faced hammer on the bearing seat.

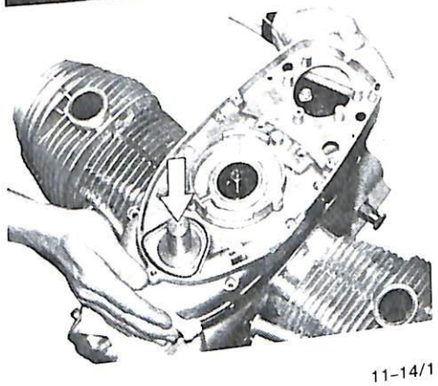

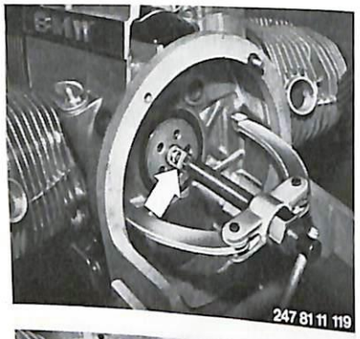

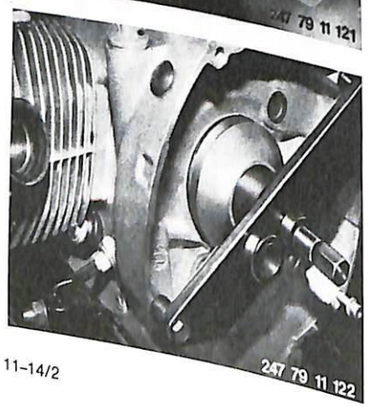

11 14 151 Radial seal for crankshaft – renewing
(gearbox end)

Pulling out the seal:
Remove (install) the clutch housing (flywheel) – 11 22 000.

From 1981 models on, the thrust ring must be pulled off the crankshaft before the radial seal can be extracted.

Offer up puller BMW No. 11 1 870 (arrow) from the side, and pull off the thrust ring using support bridge BMW No. 00 8 550.

■

Cut away the lip of the sealing ring at the lower left for a distance of app. 5 cm (2 in).

■

Attach the cross-member of puller BMW No. 11 1 890 to the crankcase (at the top right and bottom left). Insert the puller spindle.
Pass the eccentric lug through the cutaway section of the sealing ring as far as the thrust washer. The lug should face down.

Turn the nut clockwise, holding with a wrench to prevent turning. Pull out the sealing ring.

■

Pressing in the seal:
Attach cross-member to assembly tool 11 1 890 on the crankcase (top right and bottom left). Attach the seal to drift BMW 11 1 880 and place the thrust piece in position.

Place the drift against the crankcase, screw the spindle through to the front and press in the seal.

Note: leave the seal in oil for about 2 hours before installing.

■

11 14 060 Timing chain cover – detaching and attaching
(models with rotary ignition trigger)

Engine removed (11 00 050) or installed

Remove (install) alternator 12 31 020

Remove (install) ignition trigger 12 11 060

Remove nine Allen screws and three internal hexagon nuts.

■

Attach BMW puller 11 1 800 to the tapped holes for the alternator housing, using three M 5 Allen screws. Attach thrust head for puller and pull off the cover.

■

Attaching timing chain cover:
Heat the cover at the ball bearing seat to app. 80 °C (175 °F) and install on the engine.
Tighten the Allen screws and nuts, starting from the center. Strike the deep-groove ball bearing sharply several times with a plastic-faced hammer to relieve stresses at the bearing seat.

■

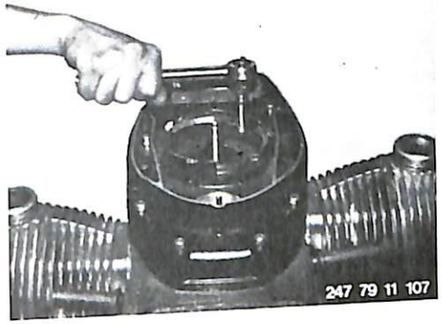

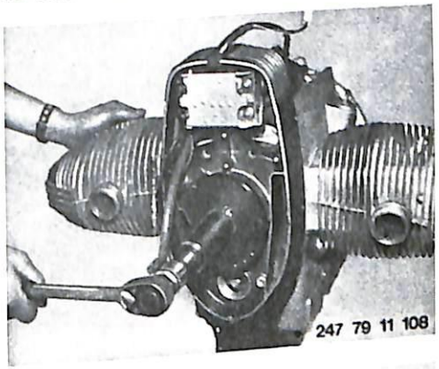

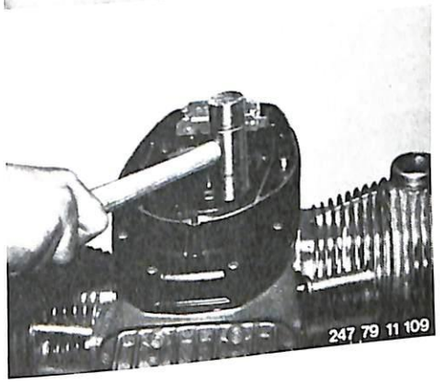

11 14 651 Radial seal for crankshaft – renewing
(alternator end)

Detach (attach) timing chain cover – 11 14 060.

Install radial seal for front crankshaft journal with drift BMW No. 11 1 850.

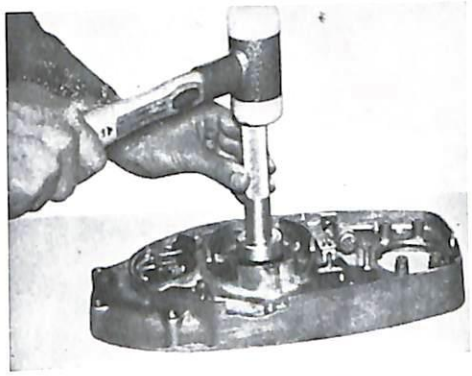

11 14 671 Radial seal for camshaft – renewing

Detach (attach) timing chain cover – 11 14 060.

Place the seal over the sleeve and drive in fully with special tool BMW No. 11 1 830.

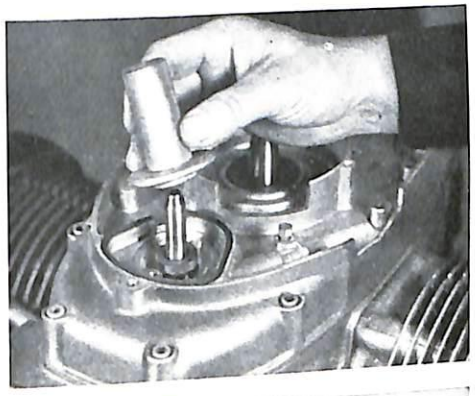

11 14 691 Radial seal for revolution counter drive – renewing

Detach (attach) timing chain cover – 11 14 060.

When renewing the radial seal for the revolution counter drive worm wheel, unscrew and remove the retaining screw and pull out the bushing with a suitable hook. Apply the aluminium drift to the worm wheel and drive out the radial seal.

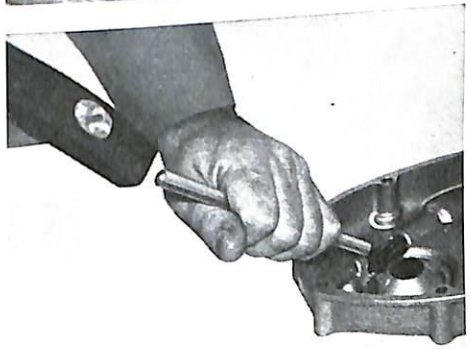

Install the worm wheel, thrust washer, radial seal and bushing, and drive in with a suitable drift.

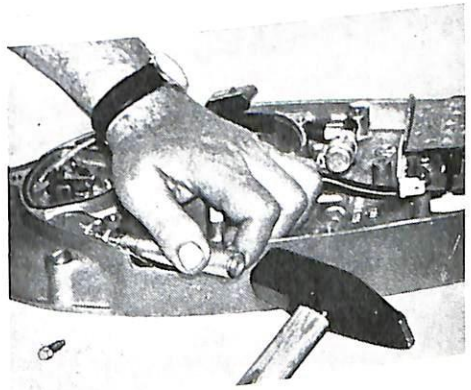

11 15 101 Engine Breather Hose – Renewing (single-sided breather)

Remove and refit fuel tank 16 11 030

Remove and refit air filter element 13 72 000

Disconnect both choke cables at the carburettor and lay to one side with left hand half of the air filter housing shell

With a straight ring spanner unscrew nut (1), slacken hexagon bolt (2) and take off the right hand half of the air filter housing shell, at the same time pushing breather hose (3) to the rear

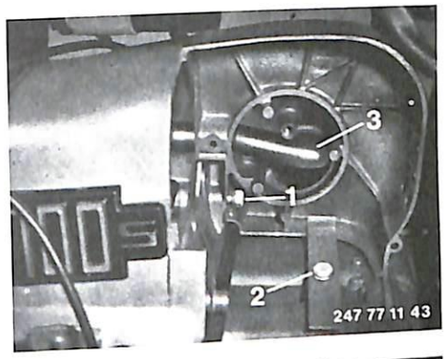

Disconnect battery

Detach starter motor cover

Disconnect wiring terminals at starter

Release hose clamp (arrow) and take off breather hose

11 15 111 Check Valve for Breather – Renewing

Renewing engine breather hose 11 15 101

Disconnect battery, remove tank and starter cover
Remove starter (12 41 020), loosen 2 Allen screws and take off breather cover

Replace plastic valve disc

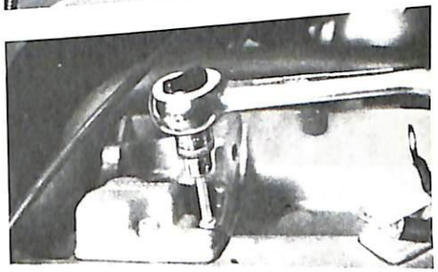

247 77 11 45

Check valve (breather)

1 Lock ring
2 Washer
3 Spring
4 Valve disc
5 Spring groove, R 60/7
6 Spring groove, R 75/7, R 100/7, R 100 S, R 100 RS
7 Valve body

11 15 101 Engine breather hose – renewing (double-sided breather)

Remove the fuel tank 16 11 030

Remove the Allen screws at the starter cover and take off the cover to the right.
Release the hose clip at the breather dome with a screwdriver (arrow).

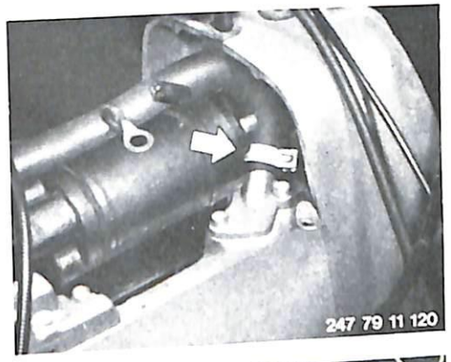

Pull the breather hose [illegible] cover at left and right.

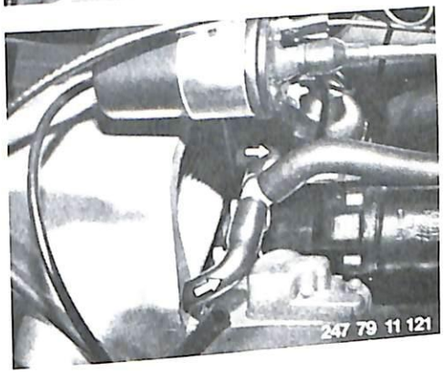

11 15 101 Engine breather hose – renewing (1981 models)

Take off fuel tank (16 11 030)

Take off the upper section of the air cleaner housing. Pull out the filter element (13 72 000)

Unscrew and remove the Allen screws in the starter motor cover and take off the cover. Using a screwdriver, loosen the clamp strap on the breather dome (arrow) and push back the breather hose

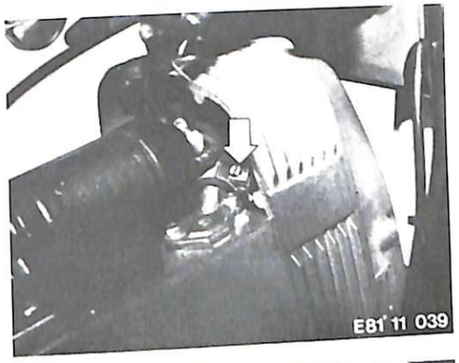

Pull the T-piece for the crankcase breather out of the air cleaner housing in the direction of the arrow. Press the breather hose back out of the air cleaner housing

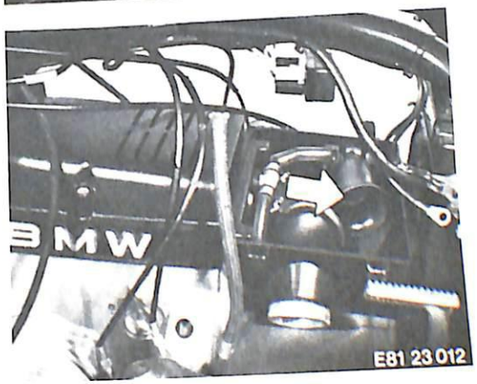

11 15 101 Engine breather hose – renewing (1981 models)

Take off fuel tank (16 11 030).

Take off the upper section of the air cleaner housing. Pull out the filter element (13 72 000).

Unscrew and remove the Allen screws in the starter motor cover and take off the cover. Using a screwdriver, loosen the clamp strap on the breather dome (arrow) and push back the breather hose.

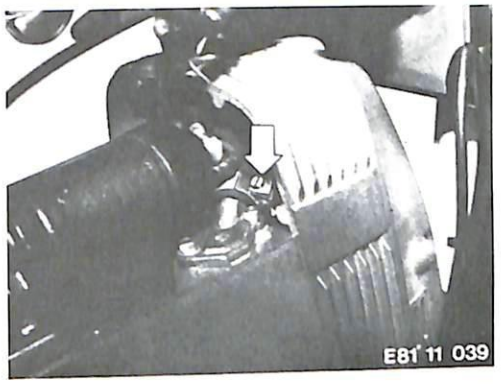

■

Pull the T-piece for the crankcase breather out of the air cleaner housing in the direction of the arrow. Press the breather hose back out of the air cleaner housing.

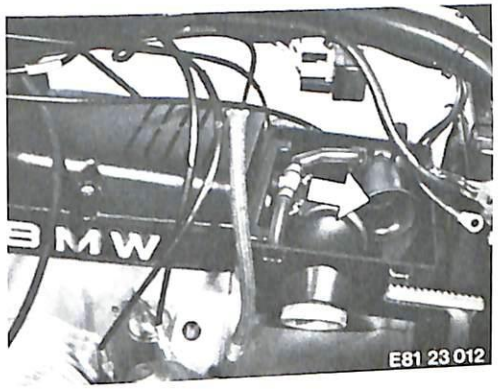

■

11 21 001 Crankshaft – removing and installing

Remove (install) the timing chain cover – 11 14 060

Remove (install) the timing chain sprockets – 11 31 061

Remove (install) pistons – 11 25 000

Remove (install) connecting rod – 11 24 000

Remove (install) flywheel (clutch housing) – 11 22 000

Slacken the remaining nuts retaining the bearing cap (arrow).

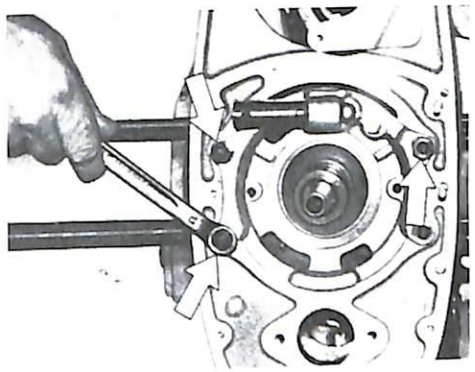

■

Position the engine vertically. Screw two bolts of puller BMW No. 00 7 500 into the tapped holes provided in the main bearing cap. Position the puller parallel to the main bearing cap. Do not forget the pressure head for the puller. Pull off the main bearing cap

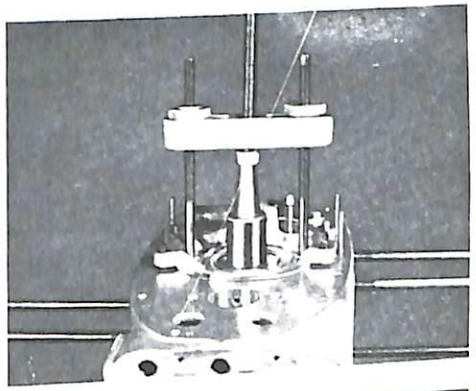

■

Turn the crankshaft until the heavy-metal plugs point in the direction of the starter

Pull the crankshaft half-out, tilt down and then pull out fully.

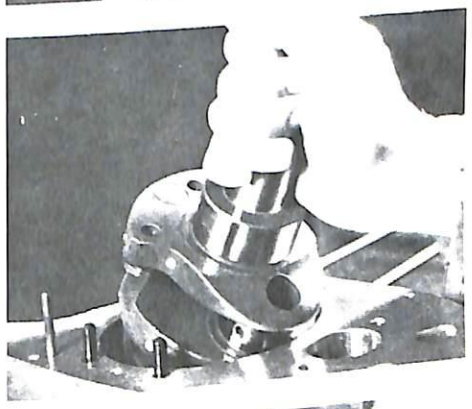

■

Using a screwdriver, lever the two thrust washers away from their locating pins.

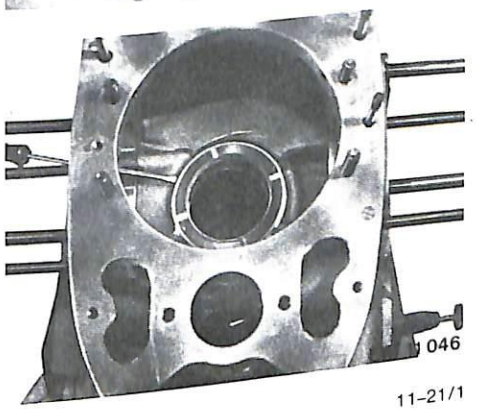

■

Measure the crankshaft and the bearing bushing.

Using a micrometer, measure the main bearing journal at 90° positions in two planes

at the front . . .

. . . and at the rear of the bearing journal

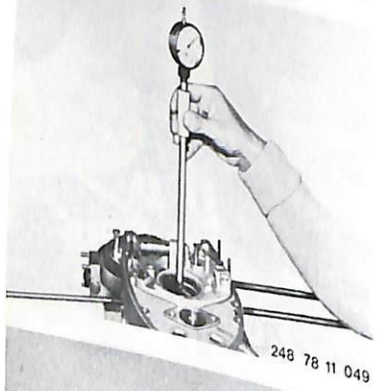

Measure the front main bearing only with the bearing cap installed.

Note: before installing the bearing cap, heat the crankcase to 100 . . . 120° C (212 . . . 248° F).

Allow the crankcase to cool down again before measuring.

Important: Main bearing play must be calculated using the measurement record sheet for main bearing play – see Technical Data.

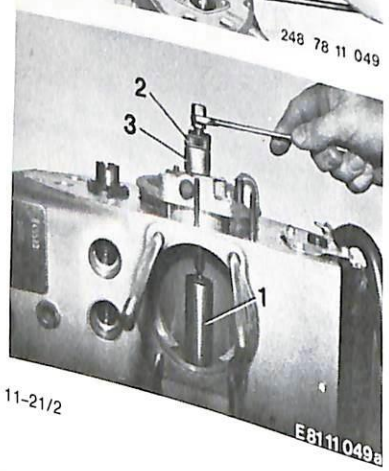

To press off the bearing cap (crankshaft removed), insert the arbor for the main bearings, BMW No. 11 2 720 (1) into the rear bearing. Using screw nipple BMW No. 11 1 710 (2) and the forcing-off bridge with spindle from Kukko extractor 17 K (3), force off the bearing cap.

Measure the crankpin.

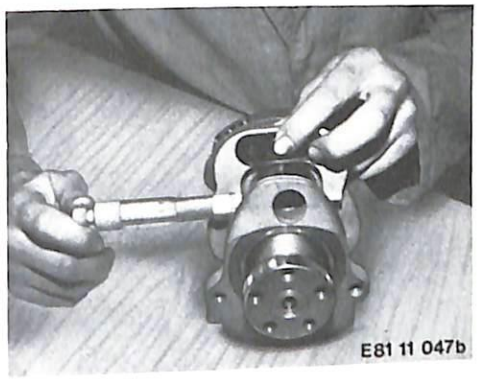

Measure the big end bearing, in both cases in the same manner as the crankshaft and main bearing bushing

For bearing play, see Specifications.

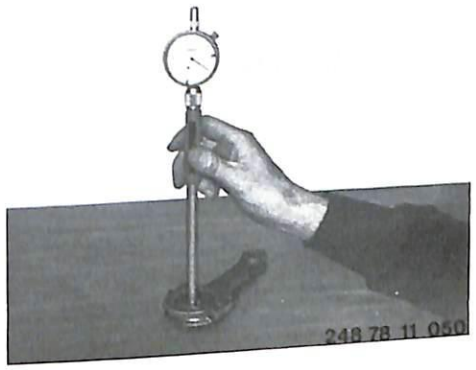

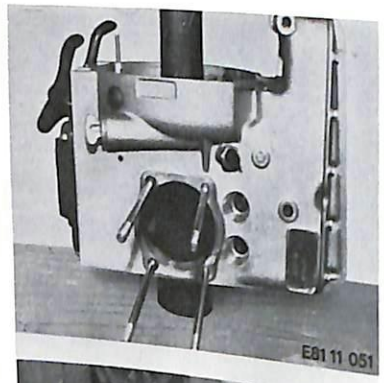

11 21 531 Main bearing bushings – renewing

Renew the crankshaft – 11 21 001

Pressing main bearing bushing out of the crankcase:

Heat the crankcase to 100 . . . 120° C (212 . . . 248° F) and then press it over the cylinder of extractor BMW 11 2 710 so that the locating pins for the inner thrust washer engage in the cylinder bores provided. Using extractor arbor BMW 11 2 700, press out the bearing bushing with a hand press. When pressing in, use aluminium section 11 2 710 together with a section of tube to absorb the pressure.

■

Heat the crankcase to 100 . . . 120° C (212 . . . 248° F). Place the aluminium dome of special tool BMW No. 11 2 710 on the pressing-out cylinder. Place the crankcase over the pressing-out tool so that the two locating pins engage in the bores provided in the aluminium dome support.

Offer up the new bearing bushing so that the gap is at the top right at the clutch housing end and the oil holes in the bearing bushing are at the bottom left and aligned with the hole in the housing.

■

Insert pressing-in arbor with plastic bushing from special tool BMW No. 11 2 710 into the bearing bushing. Make sure that the projecting locating pins in the housing enter the cutouts at the edge of the pressing-in arbor after the bearing bushing has been pressed in. The size of the bearing bushing is chosen to ensure that it is recessed slightly on both sides in the bearing bore in the crankcase.

■

Renewing main bearing bushing in main bearing cap:

Drive the bearing bushing locating pin out from the inside. Heat the bearing cap to 100 . . . 120° C (212 . . . 248° F) and place it on the cylinder of extractor tool BMW 11 2 710. Using a hand press and pressing-out arbor BMW 11 2 700, press out the bearing bushing; alternatively, drive it out with a hammer.

■

Press the new bearing bushing into the bearing cap after heating the cap to 100 . . . 120° C (212 . . . 248° F). The gap in the bearing bushing must be at the top of the bearing cap when installed, and the oil holes must be vertical. The bearing bushing gap must be at app. 26° to the vertical (arrows).

■

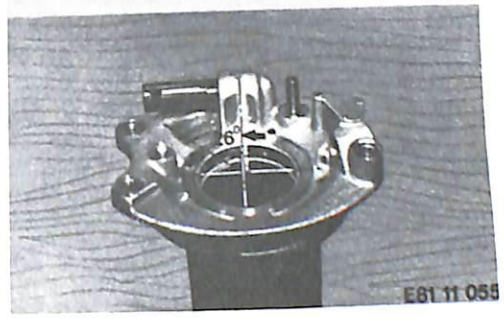

Clamp the bearing cap between soft jaws in the vice. Through the two existing 3.2 mm dia. holes, drill two additional oil holes, Items 1 and 2, into the bearing bushings. Carefully deburr the holes where they enter the bearing bushings.

■

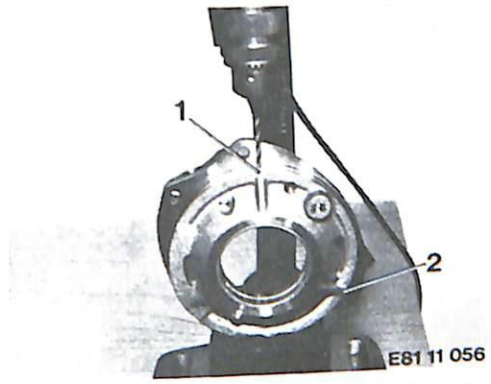

Secure the bearing bushing in position. Working through the locating pin hole (4 H 8) in the bearing cap, and using a 3.9 mm twist drill, make a centering mark on the bearing bushing. Drill through the bearing bushing at 3.8 mm diameter (initial bore for reaming out).

Do not ream right through the bearing bushing with the 4 mm H 8 hand reamer, so that the locating pin cannot work its way inwards.

Carefully deburr the edge of the hole.

■

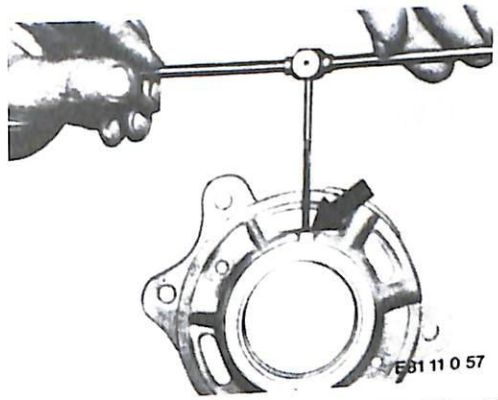

Clamp pressing-in arbor BMW No. 11 2 710 into the vice. Attach the bearing cap. Drive the retaining pin in only until it is 0.5 to 1.0 mm (0.02 to 0.04 in) clear of the bearing bushing bore. Secure the pin with three centerpunch marks.

■

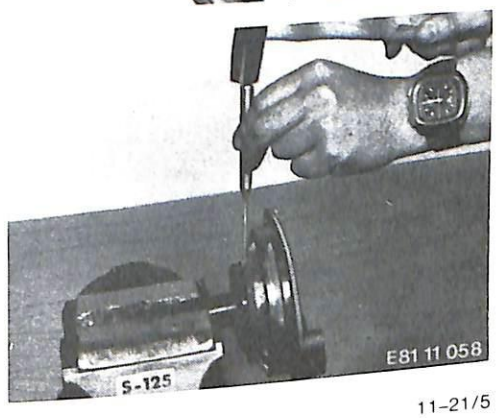

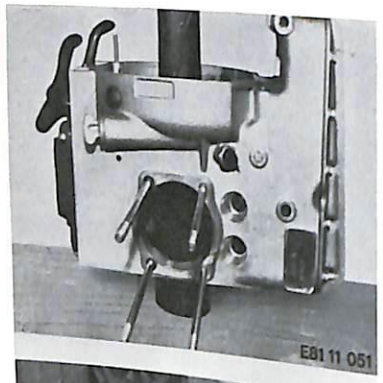

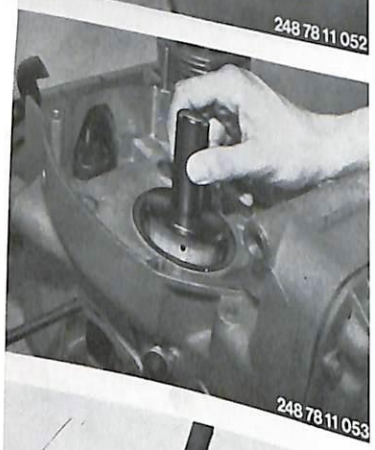

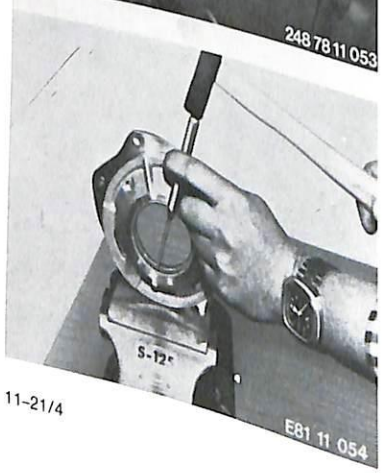

11 21 531 Main bearing bushings – renewing

Renew the crankshaft – 11 21 001

Pressing main bearing bushing out of the crankcase:

Heat the crankcase to 100 . . . 120° C (212 . . . 248° F) and then press it over the cylinder of extractor BMW 11 2 710 so that the locating pins for the inner thrust washer engage in the cylinder bores provided. Using extractor arbor BMW 11 2 700, press out the bearing bushing with a hand press. When pressing in, use aluminium section 11 2 710 together with a section of tube to absorb the pressure.

■

Heat the crankcase to 100 . . . 120° C (212 . . . 248° F). Place the aluminium dome of special tool BMW No. 11 2 710 on the pressing-out cylinder. Place the crankcase over the pressing-out tool so that the two locating pins engage in the bores provided in the aluminium dome support.

Offer up the new bearing bushing so that the gap is at the top right at the clutch housing end and the oil holes in the bearing bushing are at the bottom left and aligned with the hole in the housing.

■

Insert pressing-in arbor with plastic bushing from special tool BMW No. 11 2 710 into the bearing bushing. Make sure that the projecting locating pins in the housing enter the cutouts at the edge of the pressing-in arbor after the bearing bushing has been pressed in. The size of the bearing bushing is chosen to ensure that it is recessed slightly on both sides in the bearing bore in the crankcase.

■

Renewing main bearing bushing in main bearing cap:

Drive the bearing bushing locating pin out from the inside. Heat the bearing cap to 100 . . . 120° C (212 . . . 248° F) and place it on the cylinder of extractor tool BMW 11 2 710. Using a hand press and pressing-out arbor BMW 11 2 700, press out the bearing bushing; alternatively, drive it out with a hammer.

■

Press the new bearing bushing into the bearing cap after heating the cap to 100 . . . 120° C (212 . . . 248° F). The gap in the bearing bushing must be at the top of the bearing cap when installed, and the oil holes must be vertical. The bearing bushing gap must be at app. 26° to the vertical (arrows).

■

Clamp the bearing cap between soft jaws in the vice. Through the two existing 3.2 mm dia. holes, drill two additional oil holes, Items 1 and 2, into the bearing bushings. Carefully deburr the holes where they enter the bearing bushings.

■

Secure the bearing bushing in position. Working through the locating pin hole (4 H 8) in the bearing cap, and using a 3.9 mm twist drill, make a centering mark on the bearing bushing. Drill through the bearing bushing at 3.8 mm diameter (initial bore for reaming out).

Do not ream right through the bearing bushing with the 4 mm H 8 hand reamer, so that the locating pin cannot work its way inwards.

Carefully deburr the edge of the hole.

■

Clamp pressing-in arbor BMW No. 11 2 710 into the vice. Attach the bearing cap. Drive the retaining pin in only until it is 0.5 to 1.0 mm (0.02 to 0.04 in) clear of the bearing bushing bore. Secure the pin with three centerpunch marks.

■

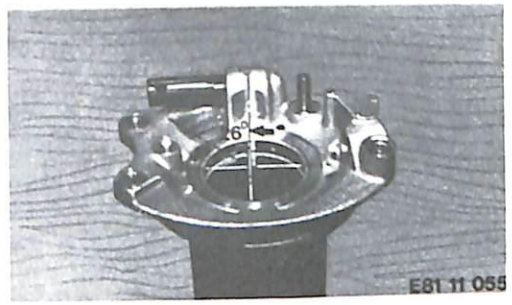

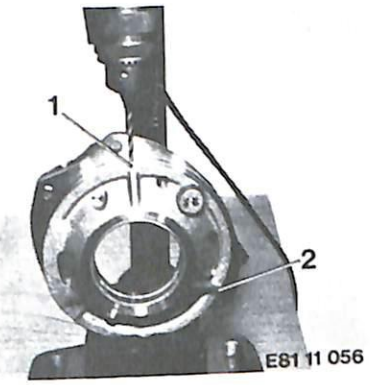

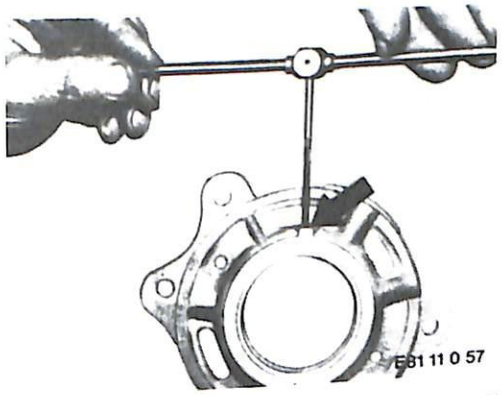

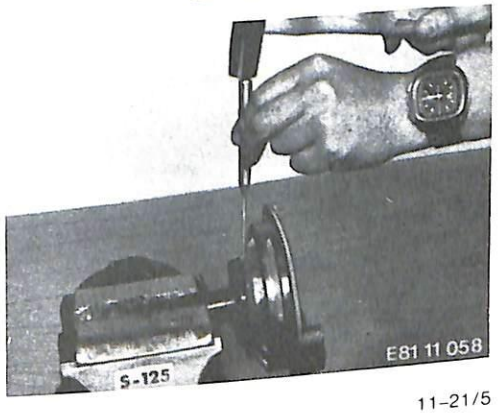

E81 11 059

E81 11 060

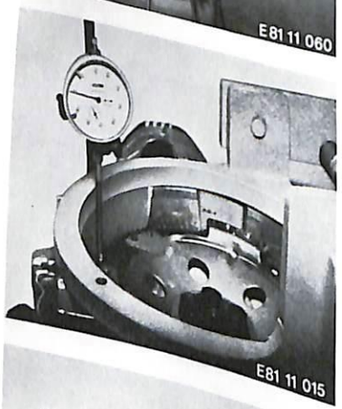
E81 11 015

E81 11 062

To reset crankshaft endplay:

See Specifications for thrust washer thickness tables.

To simplify crankshaft endplay adjustment, it is advisable to place a thrust washer marked in red on the locating pins at the inside and outside. Both locating pins must project by an equal amount in the housing at the clutch and crankshaft ends. Heat the crankcase to re-align or insert the locating pins.

■

Heat the crankcase to 100 – 120° C (212 – 248° F) and position it vertically in the assembly stand. Carefully insert the crankshaft into the crankcase. Place the bearing cap in position and tighten down. Turn the crankcase through 180 degrees.
Attach the clutch housing (flywheel).

Removing and installing clutch housing – 11 22 000.

■

Return the crankcase to a horizontal position. Screw dial gauge holder BMW No. 00 2 500 to the gearbox flange. Determine axial play (endplay).

Detach the clutch housing (flywheel) again and measure the thrust washer previously installed (marked in red) with a micrometer.

■

Example:

Endplay as determined:	0.18 mm	(0.0071 in)
Desired endplay:	0.12 mm	(0.0047 in)
Difference:	0.06 mm	(0.0024 in)
Thickness of thrust washer when removed:	2.48 mm	(0.0976 in)
Plus difference:	+ 0.06 mm	(0.0024 in)
Thrust washer to be installed:	2.54 mm	(0.1000 in)

■

Select a thrust washer as close as possible in thickness to the value determined in this way, and not differing by more than + 0.03 mm (0.0012 in) or – 0.05 mm (0.0020 in). Place this thrust washer on the locating pins.

■

Using special tool BMW 11 1 890 with drift 11 1 880, press the shaft sealing ring into the crankcase. Press the drift in until it touches the thrust washer.

Note: before installing, place sealing rings in oil for about 2 hours.

■

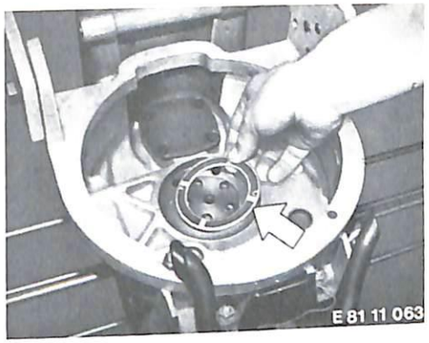
E 81 11 063

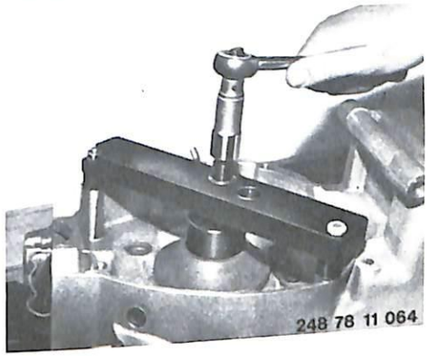
248 78 11 064

11 22 000 Flywheel – Removing and Refitting

First possibility remove and refit engine – 11 00 050
Remove and refit clutch – 21 21 000

Second possibility: remove and refit gearbox – 23 00 020

Engine remains in frame

Remove and refit clutch – 21 21 000

Fit BMW 11 2 800 back up plate in flywheel so that it comes to rest at the lower cast eyes in the housing

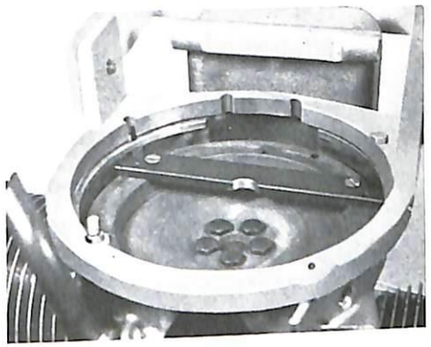

■

Release five fastening bolts and carefully lift out the flywheel after screwing in two clamping screws taking care not to tilt the flywheel Alternatively pull the flywheel off the crankshaft stump with the BMW 11 2 810 extractor tool

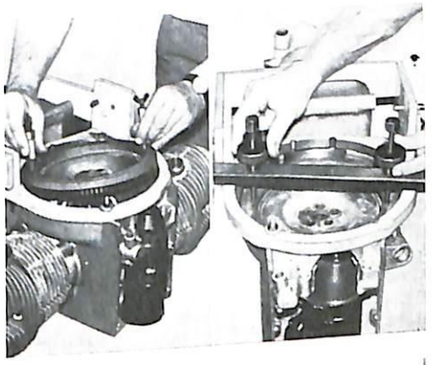

■

When refitting, set piston to top dead centre and place the flywheel on the crankshaft stump so that the TDC marking is visible in the sight aperture of the housing
Fit the BMW 11 2 800 back-up plate in the flywheel
Tighten five fastening screws to the prescribed torque ratings see Technical Data The flywheel fastening bolts are of the expanding head type and must be fitted in dry condition
Ensure that the contact surface of the flywheel, the front end of the crankshaft and the crankshaft tapped bores are free of oil (dry)

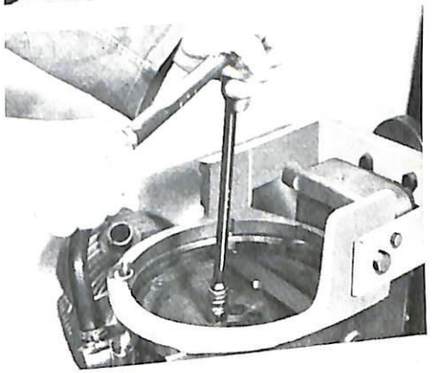

■

Use a dial gauge mounted in gauge holder BMW 00 2 500 to check the flywheel for wobble To eliminate end float on the crankshaft when checking the flywheel for wobble the engine must be positioned vertically in the assembly rig When the engine is in situ press against the crankshaft stump locator

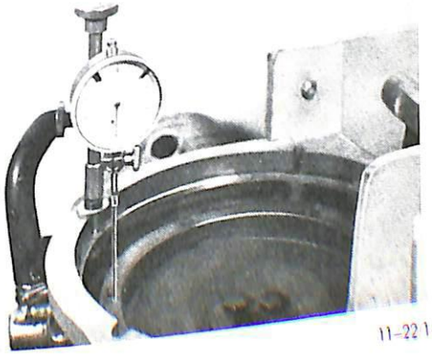

■

11 22 000 Clutch housing (flywheel) – removing and installing (1981 models)

Remove (install) clutch – 21 21 000

Attach retaining device BMW No. 11 2 800 to the clutch housing, and unscrew the bolts at the crankshaft

For correct tightening torques, see Specifications

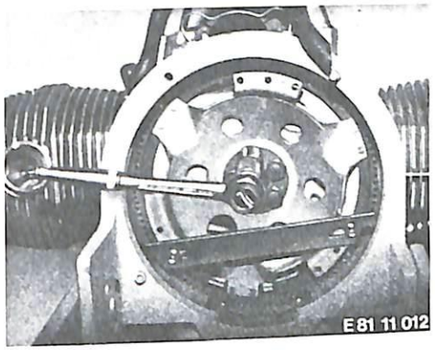

Take off the clutch housing (1) and steel shim (2)

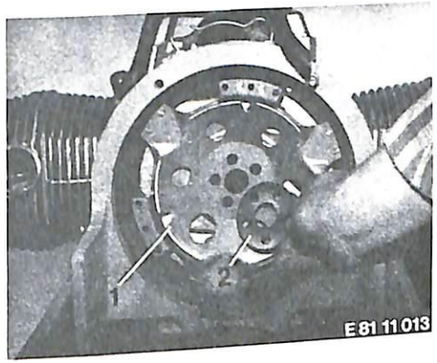

11 24 000 Connecting rod – removing and installing

Remove (install) engine – 11 00 050.

Remove (install) cylinder head – 11 12 080.

Remove (install) piston – 11 25 000.

All preliminary testing and repair work is to be performed only if needed.

The connecting rod is removed and installed with the crankshaft in the top dead center position. Using multi-sided wrench BMW No. 11 2 860, unscrew the big end bolts. Take out the connecting rod together with the big end bearing cap and bearing shells. ■

When installing: the locating pins on both connecting rods must be on the alternator side.

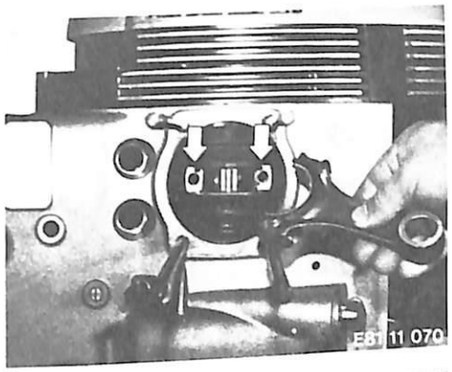

■

Testing and repair: measure width of connecting rod at crankpin bearing with a micrometer. For dimensions, see Specifications.

Within the engine, both connecting rods must have the same weight or colour markings.

Check that the small end bushing is firmly seated and to the correct dimensions.

■

If the internal diameter of the small end bushing is beyond the wear limit, press out the bushing. For dimensions, see Specifications.

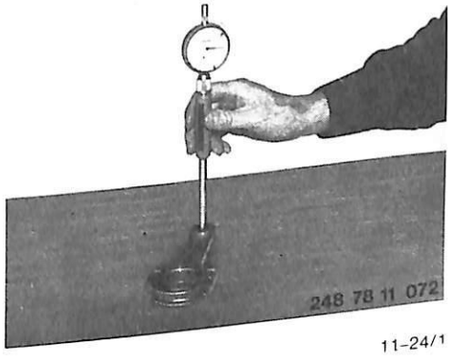

■

248 78 11 074

The piston pin should slide into a new small end bushing when light thumb pressure is applied.

■

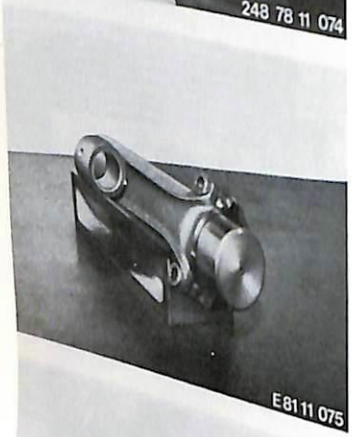
E 81 11 075

Measuring the connecting rod

Press the bearing shells used for test purposes into the connecting rod. Mount the connecting rod on the hardened and ground test mandrel and tighten the bolts. The test mandrel must not have any radial play in the crankpin bore.

Push a hardened and ground measuring mandrel approx. 150 mm (5.9 in) long into the small end bushing, so that it projects by the same amount on both sides.

■

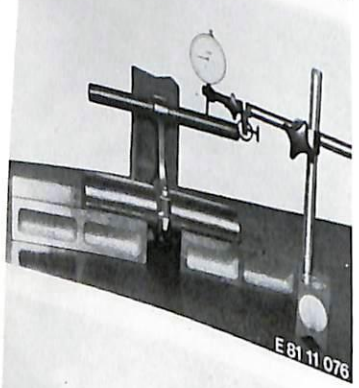
E 81 11 076

Place two Vee-guides of the same size on an alignment plate. Support the connecting rod by means of the test mandrel on the Vee-guides. Hold the connecting rod vertically. Using a dial gauge and stand, measure the height of the test mandrel at both sides to determine whether the small end bushing axis is parallel to the crankpin axis. For checking whether connecting rod is parallel, see Specifications.

■

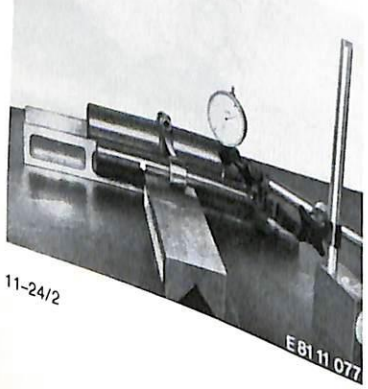
E 81 11 077

Check connecting rod twist: support the connecting rod in Vee-guides as before, and also under the small end until the distance between the alignment plate surface and the centerlines of the small and big end bores is approximately the same.

Apply the dial gauge on its stand to the ends of the test mandrel in the small end bushing to check for twist. Have the connecting rod straightened if necessary. For twist limit, see Specifications.

■

Press the bearing shells into the big end bore of the connecting rod, which should be clean.

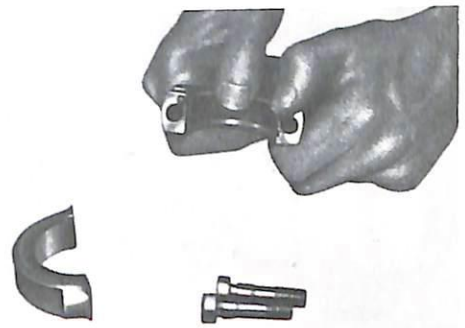
248 78 11 078

■

Before the big end bearing shells are installed again, they should be coated lightly with Molykote G paste.

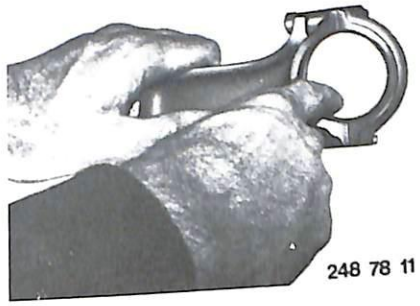
248 78 11 079

■

11 25 000 Piston – removing and installing

Remove (install) cylinder head 11 12 080

Pull the cylinder off its 4 tierods. Make sure that as the piston is exposed it does not become damaged by slipping out of the cylinder. Insert a piece of wood to protect the piston between the tierods behind and below the piston.

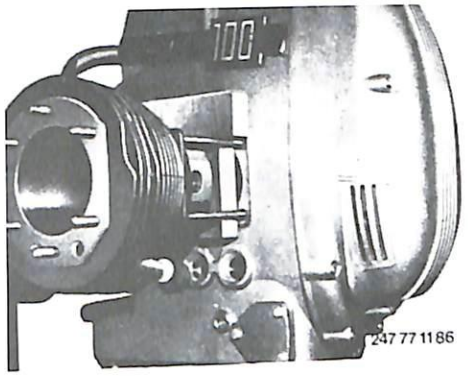

■

Press a scriber point or a small screwdriver into the cross-groove to release the piston pin circlip. Press the piston pin out with a commercial extractor tool or drift BMW No. 11 2 920.

From 1978 models on, the piston pin is retained by a Seeger-pattern circlip, which should be removed with the correct pliers.

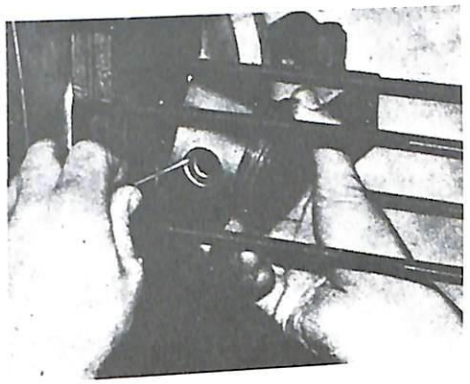

■

When installing: attach the piston with the marking "vorn" (front) on its crown pointing towards the front of the motorcycle. This will ensure the correct positioning of the offset-axis piston. The piston need not be heated to insert the piston pin.

Both pistons on an engine must be of the same weight group.

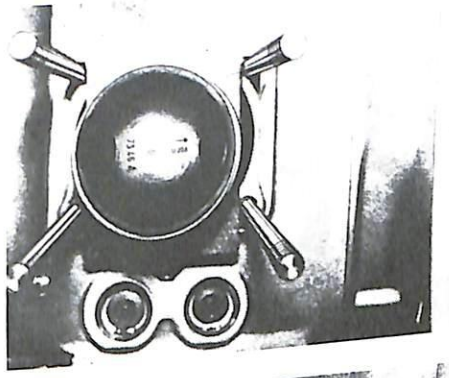

■

Insert the piston pin circlip in its groove so that one end easily covers the cross-groove. Press the center section of the circlip into the groove in the piston pin so that the two ends of the ring are as close together as possible. Use drift BMW No. 11 2 920 to press the ring fully into the groove.

When installing: before installing the cylinder, clean the cylinder base and contact faces on the engine block with nitro thinners, then apply "Hylomar" liquid sealant (not to be applied from 1981 models on). Make sure that the cord ring seals on the upper studs are not trapped and distorted.

Keep the sealant clear of the oilways, or they may become blocked.

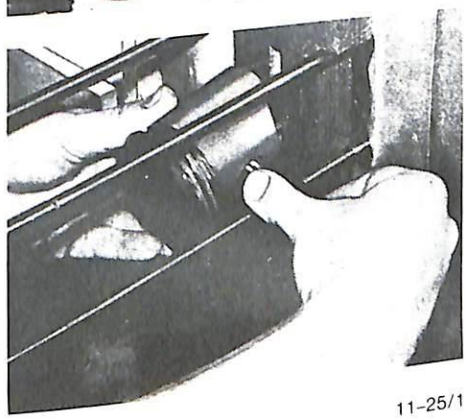

■

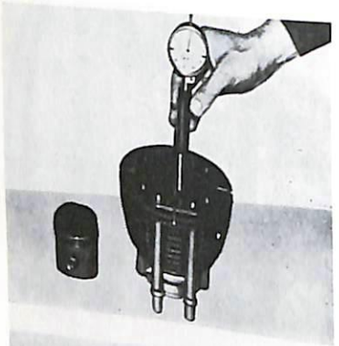

Testing and repairing: measure the cylinder bore along the line of the piston pin and at 90° to this line at points 10 mm (0.4 in) from the top, in the center and at the bottom, using an internal dial-gauge micrometer. This test should be performed at a room temperature of 20° C (68° F).

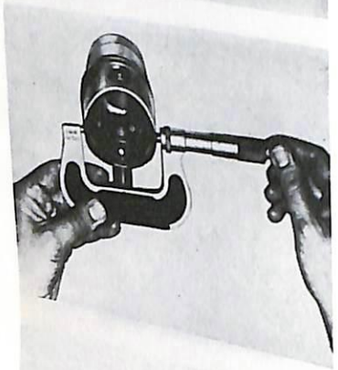

Measure piston diameter at the piston skirt, at a right angle to the piston pin bore, using a micrometer.

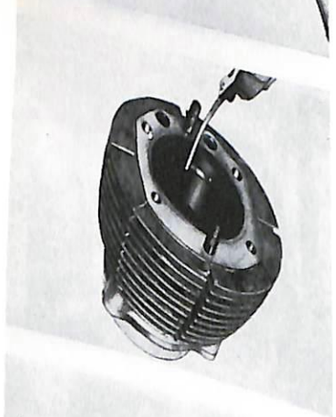

Determine piston ring end gap and

piston ring flank clearances with a feeler gauge. For nominal and oversize cylinder bore diameters, piston diameters and piston ring gap and flank clearances, see Specifications.

11 31 061 Timing chain sprockets – renewing (models without rotary ignition trigger)

Remove and refit engine 11 00 050
Remove and refit cylinder head 11 12 080
Remove and refit timing cover 11 14 060
Remove and refit flywheel 11 22 000
Remove and refit connecting rod 11 24 000
Remove and refit piston 11 25 000
Remove and refit oil pump 11 41 000
Remove and refit alternator 12 31 020
Remove and refit clutch 21 21 000

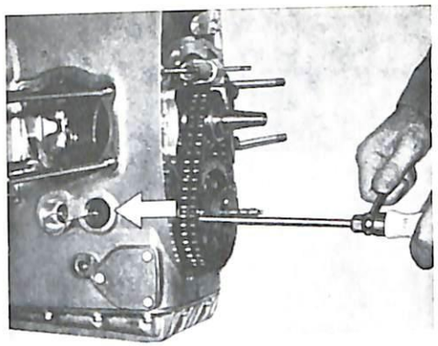

Unscrew the two slotted hexagon head screws fastening the camshaft flanged bearing with the aid of an M 10 spanner or a screwdriver. Withdraw the four push rods with the aid of a wire hook.

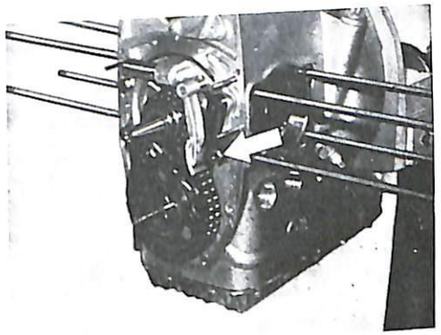

After removing the circlip, take off the chain tensioner. Remove the chain tensioner spring after releasing the nut (arrow).

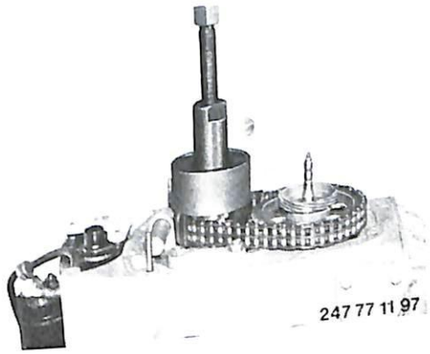

Fit the BMW 11 2 600 timing chain sprocket extractor on the crankshaft sprocket (not forgetting the extractor pad cap). Draw off the sprocket and ball bearing while tightening the camshaft.

Insert the camshaft into a suitable pipe (outer diameter approx. 106 mm (4.17 in), inner diameter approx. 90 mm (3.54 in) and length approx. 225 mm (8.86 in) so that the sprocket lies flat on the pipe. Fit BMW 11 3 600 sleeve on the camshaft end face and press out the sprocket together with the rev. counter drive gear.

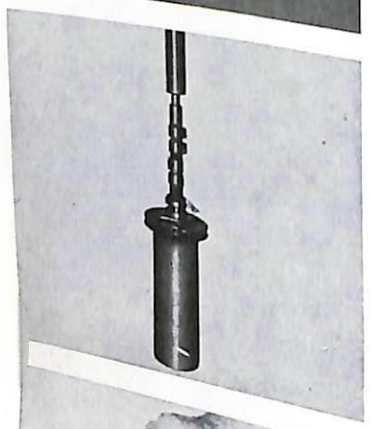

Before refitting the timing sprockets, grease the gear bores lightly with tallow.

The rev. counter drive is pressed on in reverse sequence to removal. Push the flanged bearing on to the camshaft, then push the sprocket followed by the rev. counter drive gear into place.

When pressing the camshaft into the sprocket hold a feeler gauge (see Technical Data for thickness) between the camshaft thrust collar and the flanged bearing.

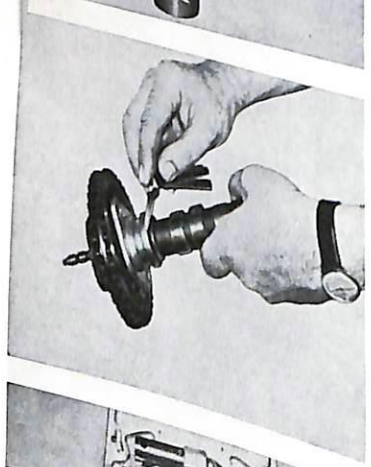

Check the end play on the camshaft flanged bearing once again with a feeler gauge.

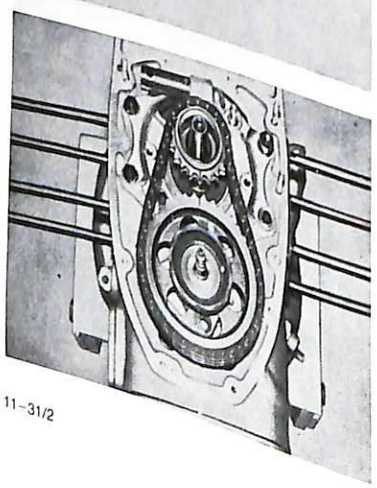

Position the crankcase vertically for fitting the camshaft. Lay the camshaft and crankshaft sprocket into the chain so that the tooth marking lines are exactly opposed.
Insert the camshaft in the crankcase and push the drive gear with slip collar on to the crankshaft stump so that the sprocket groove coincides with the fitting key.

11 31 061 Chain sprockets – renewing (models with rotary ignition trigger)

The engine can be either removed or left installed.
If installed, drain the engine oil.
Remove (install) engine – 11 00 500
Remove (install) rotary ignition trigger – 12 11 060
Detach (attach) timing chain cover – 11 14 060
Remove chain guide rail (1) and chain tensioner arm (2)
Release spring link (3) and remove chain.

When installing:

The closed end of the spring link must face the direction of chain movement. The chain guide rail must be parallel to the chain.

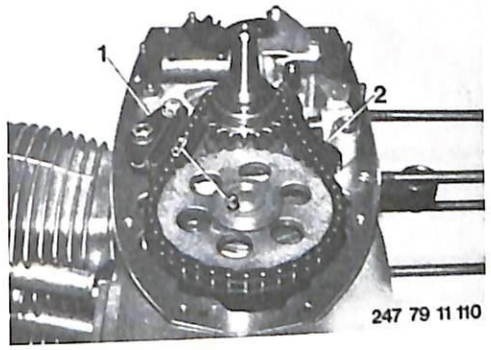

Pull the chain sprocket off the crankshaft together with the bearing. Use BMW puller 11 2 600, but replace dish 11 2 606 by one with a groove. This will enable the bearing to be re-used.

When installing:

Heat the chain sprocket to app. 80° C (175° F), then heat the bearing and push on.

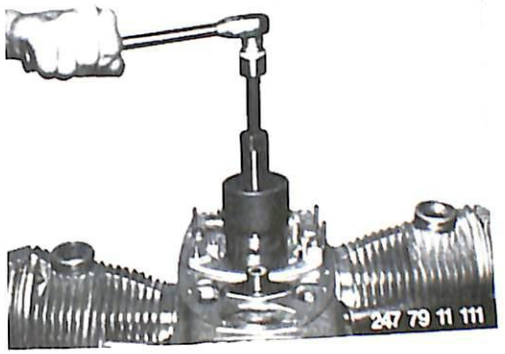

Press off the camshaft chain sprocket with two screwdrivers avoiding damage to the sealing face.

When installing:

The marks on the two chain sprockets should be opposite one another.

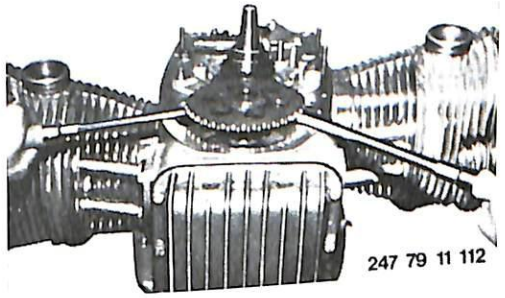

Screw the BMW 11 2 620 screw press with spindle into the crankshaft stump. Press the sprocket firmly into position ensuring that the camshaft is guided accurately into its bearing seat at the flywheel end.

When installing:
Do not screw the threaded spindle fully into the crankshaft. Hold with open-ended wrench.
Assembly can only be performed by 2 persons.

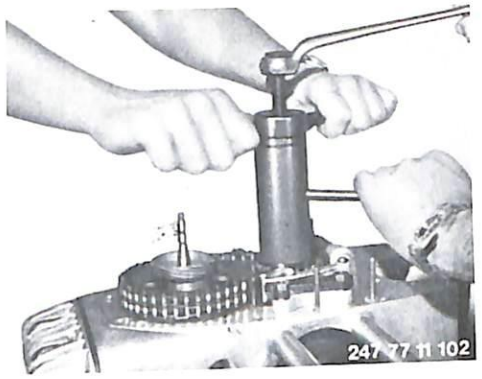

Tighten the camshaft flanged bearing with its two hex. slot screws. Heat the grooved bearing to approx. 80 ... 100 °C (175 ... 212 °F) and mount on crankshaft stump. Fit chain tensioner, ensuring that the rubber running surface is in good condition. Do not change the form or spring pressure of the timing chain tensioning spring.

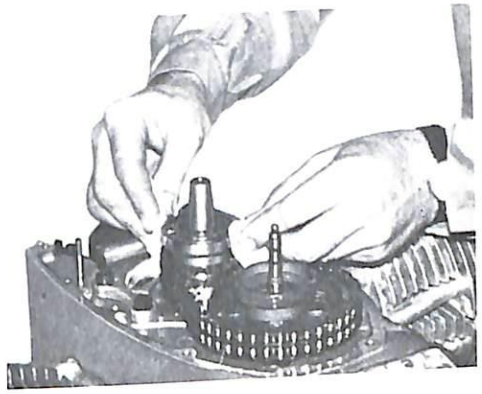

11 34 504 Valve Clearance – Adjusting

Slacken off the cap nut and the two nuts (arrows), remove the cylinder head cover and gasket

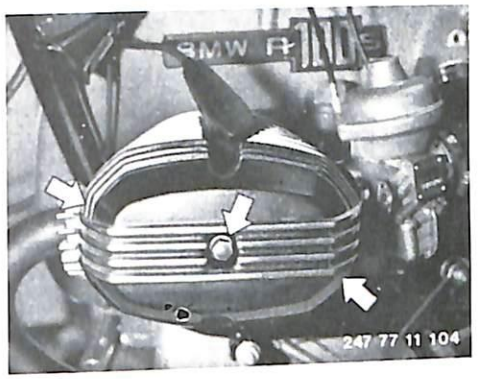

Adjust the valve clearance with the engine cold and stationary by inserting the appropriate feeler gauge between the valve stem and rocker arm. For this purpose take out the spark plugs and turn the engine with the kick starter till the cylinder to be adjusted is at top dead centre on the compression stroke. Both valves are closed. If necessary adjust the adjusting screw after releasing the lock nut and then secure with the lock nut. Recheck the valve clearance. See Technical Data for valve clearances

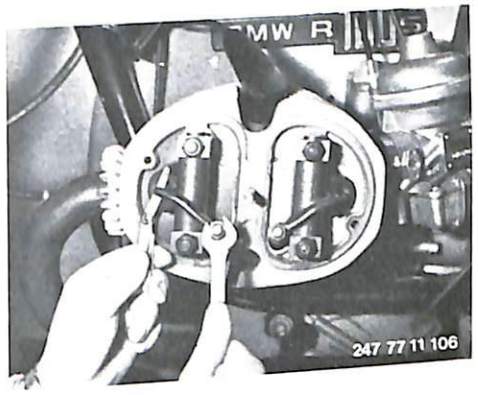

11 41 000 Oil Pump – Removing and Refitting

First possibility: Remove and refit engine – 11 00 050
The illustrations and text were prepared after this preliminary work

Second possibility: Remove and refit gearbox – 23 00 020
(Engine remains in frame)

Remove and refit clutch – 21 21 000
Remove and refit flywheel – 11 22 000

After unscrewing the four hexagon bolts, take off the oil pump housing cover

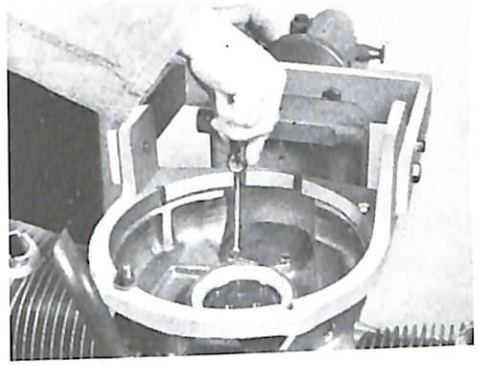

Take the inner and outer rotor out of the housing with the aid of a wire hook

Before extracting the driver key (fitting key) for the inner rotor it is advisable to press a small rag into the oil pump housing bores

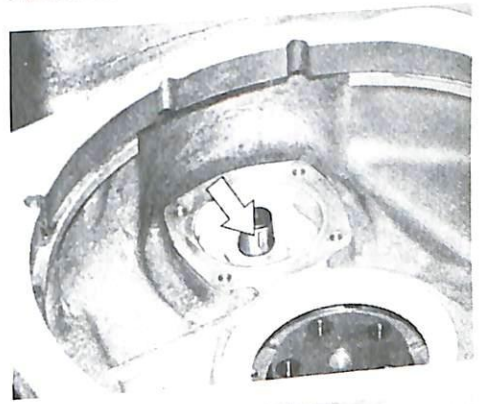

Tests:
See Technical Data for clearance between outer rotor and pump housing

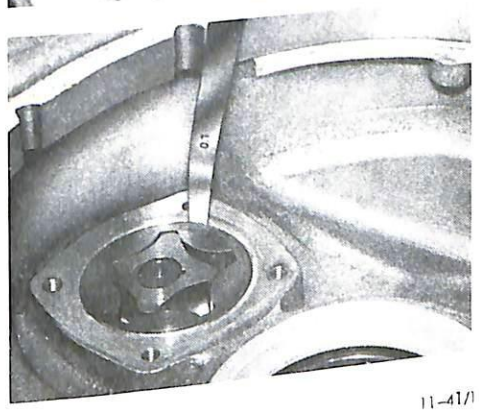

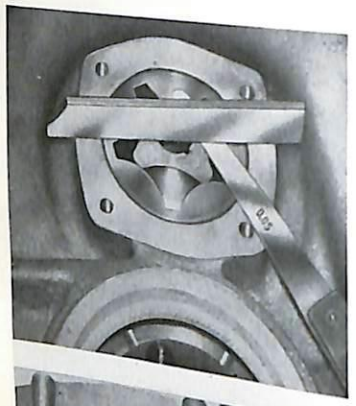

See Technical Data for clearance between pump housing contact surface and outer sealing surface

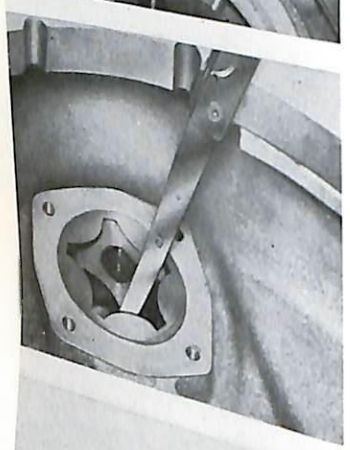

Determine the gap between the inner and outer rotors with the aid of a feeler gauge. See Technical Data for clearances

When reassembling, do not forget to replace the fitting key and ensure that the O ring in the cover is in perfect condition

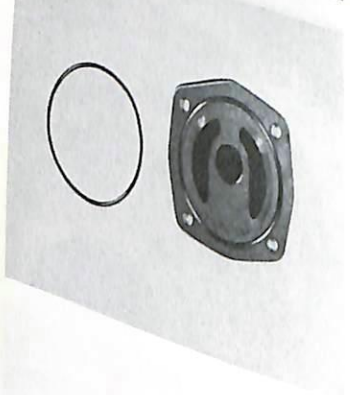

When assembled, the O ring must be compressed so that the cover lies flat on the housing contact surface.

11 42 130 Oil cooler – removing and installing

Drain the engine oil

Detach and take off the center section of the engine panelling

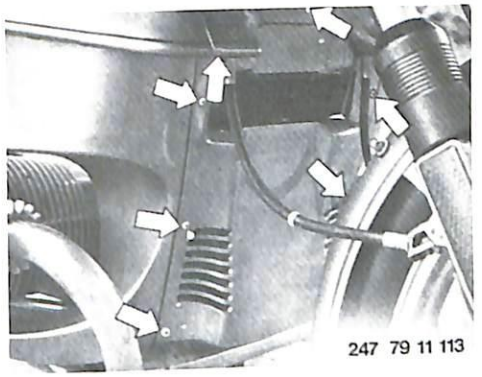

247 79 11 113

Unscrew the threaded union of the oil filter head

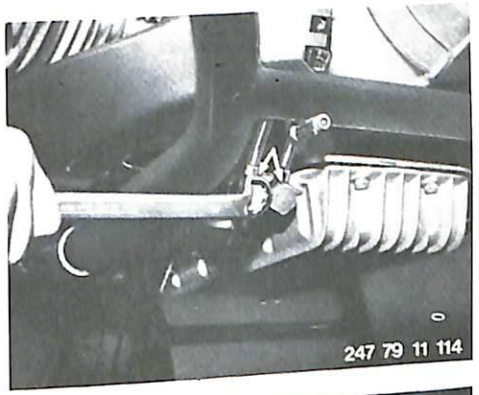

247 79 11 114

Remove the two hex bolts (arrows) at the oil cooler mount
Detach the oil cooler with hoses

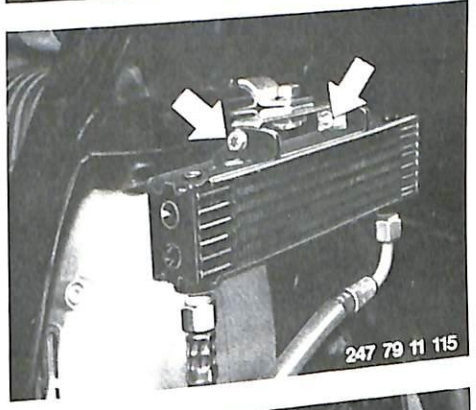

247 79 11 115

Remove the three Allen screws (arrows) at the oil filter head and take it off

When installing:

Tighten the Allen screws in several successive stages

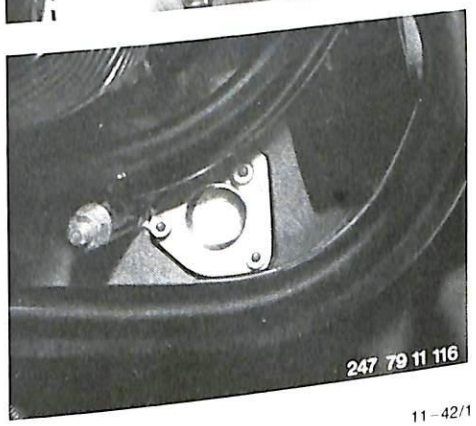

247 79 11 116

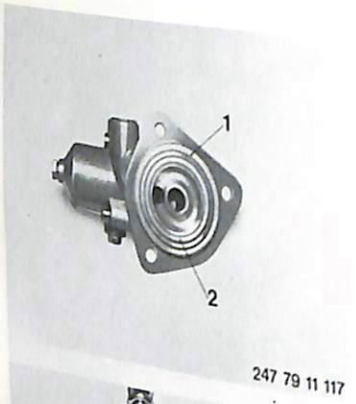

247 79 11 117

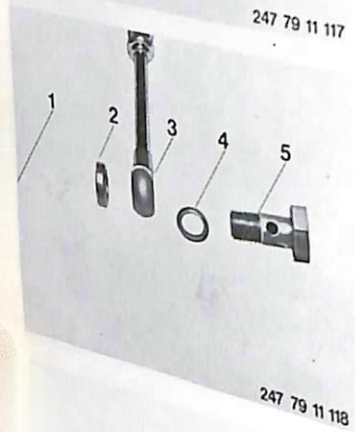

247 79 11 118

Important:

Use new O-rings (1 and 2) at filter head.

■

When assembling, make sure that the spacer between the pipe union and the filter head is correctly seated.

1 Filter head
2 Spacer
3 Union
4 Gasket
5 Hollow screw

Add oil (2.5 liters [2.7 US quarts, 4.4 Imp. pints] including oil cooler and hoses).

■

Trouble-shooting – engine

Fault	Cause	Remedy
Loss of compression	Valve leaking or bent	Regrind or renew
	Piston ring spring loading to weak ring gap too large	Check, renew if necessary
	Piston rings broken	Renew
Low power output	Incorrect ignition timing	Check, adjust if necessary
	Float level too low	Check and adjust if necessary
	Air cleaner blocked	Renew element
	Fuel tap blocked	Clean, check flow rate
	Tank vent defective	Drill vent holes (see SI)
Engine reluctant to start or will not start at all	Valve clearances too low	Check and adjust if necessary
	Choke cannot be closed	Check choke setting
	Ignition timing incorrect	Check timing
	Breaker points gap too small	Reset points
	Contacts eroded	Renew
	Spark plug gaps incorrect	Reset
	Spark plugs wet	Dry out
Engine does not accelerate smoothly	Centrifugal ignition advance too small or not working	Renew centrifugal governor
	Broken springs	Renew springs
	Cam seized to shaft, shaft rusted	Free contact breaker cam
	Spark plug gaps incorrect	Reset
Engine starts, but immediately stalls	Break or short circuit at condenser	Renew condenser
Engine misfires, high fuel consumption	Defective ignition lead or spark plug cap	Renew
	Defective suppressor resistors	Renew
Pre-ignition (pinking)	Incorrect ignition timing	Retime ignition
	Incorrect needle position at carburetor	Reset needle to correct position
Oil pressure too low	Main bearing play excessive	Measure crankshaft and bearings
	Blocked oil suction head	Check, renew if necessary
	Pressure relief valve stuck open	Remove and repair valve

12 Engine electrical system

	Specifications	Page 12- 0/3
	Specifications (1979 models)	12- 0/6
	Specifications (1981 models)	12- 0/9
12 11 004	Timing the ignition (models without ignition trigger)	12-11/1
12 11 004	Timing the ignition (models with ignition trigger)	12-11/1
12 11 060	Timing the ignition (1981 models)	12-11/1
12 11 141	Ignition trigger - removing and installing	12-11/3
12 11 141	Breaker points - renewing (models without ignition trigger)	12-11/4
	Breaker points - renewing (models with ignition trigger)	12-11/4
	Troubleshooting - ignition system	12-11/5
12 13 100	Troubleshooting - ignition system (from 1981 models on)	12-11/5
12 14 010	One coil - removing and installing	12-13/1
12 14 025	Control unit - removing and installing	12-14/1
12 31 009	Heat sink - removing and installing	12-14/1
12 31 019	Alternator, diode board and regulator switch - checking	12-31/1
12 31 020	Alternator with regulator - quick check	12-31/2
12 31 212	Alternator - detaching and attaching	12-31/2
12 31 689	Alternator - reconditioning	12-31/3
12 32 000	Stator winding and rotor - checking	12-31/3
	Regulator switch for alternator - removing and installing	12-31/5
12 41 009	Troubleshooting - alternator	12-31/5
12 41 020	Starter - checking (installed)	12-41/1
12 41 513	Starter - removing and installing	12-41/1
12 41 541	Starter - stripping and assembling	12-41/3
12 41 602	Carbon brushes - renewing	12-41/5
12 41 701	Starter - reconditioning	12-41/5
	Exciter winding - renewing	12-41/6
	Troubleshooting - starter	12-41/7

Specifications – '79 models

Model	R 80/7	R 100 T	R 100 S	R 100 RT	R 100 RS
Starter: Type	Bosch DF 12 V 0.6 HP				
Starting short circuit current strength A	320				
Output HP	0.6				
Torque mkp/ft lb	0.75 (5.4)				
Starter relay	Bosch				
Axial float, armature, mm(in)	0.10 0.15 (0.004 0.006)				
Alternator: Type	Bosch G 1 14 V 20 A 21 280 W			Bosch G 1 14 V 18 A 22 240 W	
Alternator drive	direct from crankshaft				
Maximum output W V	280 14			250 14	
Maximum current strength A	20			18	
Resistance between phase outputs, Ohms	0.62				
Charging commences, rev min	990				
Maximum rev min	10 000				
Maximum deflection at slip rings, mm(in)	0.06 (0.0024)				
Resistance between rotor sliprings, max. Ohms	$3{,}4^{+0{,}34}$				
Minimum slip ring diameter, mm(in)	26.8 (1.055)				
Voltage Regulator: Type (Bosch)	0 190 601 009 AD 1/14 V				
Regulating voltage, without load, Volts under load, Volts	13.55—14.25 13.9–14.3				

Engine electrical system

Technical Data

Model	R 60/7	R 75/7	R 80/7	R 100/7	R 100 S	R 100 RS
Diode carrier: Type (Bosch)	D 120 915 158 14 V 20 A					
Ignition coil: Type (Bosch)	E 6 V					
Length of starting spark at 300 sparks/minute and 3 V, mm(in)	8 (0.32)					
Length of operating spark at 3600 sparks per minute, mm(in)	13.5 (0.53)					
Spark plugs: Thread	M 14 × 1.25					
Bosch	W 225 T 30	W 200 T 30	W 175 T 30	W 200 T 30	W 225 T 30	W 225 T 30
Beru	230 14 3A	200 14 3A	175 14 3A	200 14 3A	230 14 3A	230 14 3A
Champion	N 6 Y	N 7 Y	N 10 Y	N 7 Y	N 6 Y	N 6 Y
Electrode gap, mm(in)	0.7 (0.028)					
Contact breaker: Type (Bosch)	Automatic centrifugal advance on camshaft					
Advance commences min^{-1}	1550					
Advance ends min^{-1}	3000					
Breaker lubricating felt and centrifugal advance lubrication	Bosch grease Ft 1 v 4					
Bearing journal for centrifugal advance	Bosch grease Ft 1 v 26					
Contact breaker points gap mm(in)	0.35 ... 0.40 (0.014 ... 0.016)					
Contact spring pressure p	450					

Engine electrical system

Technical Data

Model	R 60 7	R 75 7	R 80 7	R 100 7	R 100 S	R 100 RS
Dwell angle	78° ± 1°					
Capacitor	0.2 µF – 25 %					
Ignition timing, static for engine assembly	6° ± 3° BTDC					
Adjustment range, crankshaft	25° ± 2°					

Tightening torques Nm (ft. lb)

Armature fastening screw	23 ... 27 (17.0 ... 19.9)	Spark plugs	23 ... 30 (17.0 ... 22.1)
Starter fastening bolts	47.5 (35.0)	Centrifugal advance unit	5 ... 6 (3.7 ... 4.4)

All other bolts and nuts are to be tightened in accordance with the usual figures shown in the manufacturer's tables or in accordance with the latest BMW Standard Specification 60 002.0.

Specifications — '79 models

Model	R 80/7	R 100 T	R 100 S	R 100 RT	R 100 RS
Starter: Type	Bosch DF 12 V				
Starting short circuit current strength A	320				
Output kW	0.7				
Torque mkp (ft/lb)	0.75 (5.4)				
Starter relay	Bosch				
Axial float, armature, mm (in)	0.10...0.15 (0.0039...0.0059)				
Alternator: Type	Bosch G 1 14 V 20 A 21/280 W	Bosch G 1 14 V 18 A 22/240 W			
Alternator drive	direct from crankshaft				
Maximum output W/V	280/14	250/14			
Maximum current strength A	20	18			
Resistance between phase outputs, Ohms	0.62				
Charging commences, rev/min	980				
Maximum rev/min	10000				
Maximum deflection at slip rings, mm (in)	0.06 (0.0023)				
Resistance between rotor sliprings, max. Ohms	3.4 · 0.34				
Minimum slip ring diameter, mm (in)	26.8 (1.055)				
Voltage Regulator: Type (Bosch)	0 190 601 AD 1/14 V				
Regulating voltage, without load, Volts / under load, Volts	13.55–14.25 / 13.9–14.3				

Specifications (1979 models)

Model	R 80/7	R 100 T	R 100 S	R 100 RT	R 100 RS
Diode board: Type (Bosch)	D 120 915 158 14 V 20 A				
Coil: Type (Bosch)	E 6 V				
Starting spark length at 300 sparks/min and 3 V mm (in)	8 (0.31)				
Operating spark length at 3600 sparks/min mm (in)	13.5 (0.53)				
Spark plugs: Thread	M 14 x 1.25 mm				
Bosch	W 175 T 30	W 225 T 30			
Beru	175/14/3A	230/14/3A			
Champion	N 10 Y	N 6 Y			
Electrode gap mm (in)	0.7 (0.028)				
Contact breaker Type (Bosch)	mechanical ignition contact breaker with centrifugal control in sealed housing; dynamic				
Timing control starts min^{-1}	1550				
Timing control ends min^{-1}	3000				
Breaker points gap mm (in)	0.45 ± 0.05 (0.018 ± 0.002)				

Engine – electrical system

Specifications (1979 models)

Model	*R 80/7*	*R 100 T*	*R 100 S*	*R 100 RT*	*R 100 RS*
Dwell angle °	*120° ± 3° (65% . . . 68%)*				
Condenser	*0.2µF ± 20% Bosch No. 1 237 330 295*				
Static firing point (for engine assembly)	*6° b TDC*				
Adjustment range ° CS	*26°*				

Tightening torques Nm (lb.ft)

Armature retaining bolt	25 ± 2 (18.4 ± 1.5)	Spark plugs	20 ± 5 (14.7 ± 3.7)
Starter retaining bolts	47.5 (35)		

All other bolts and nuts are to be tightened according to the customary values shown in the manufacturers' tables or on the latest BMW 60002.0 standards sheet

Engine – electrical system

Specifications (1981 models)

Model	R 100	R 100 CS	R 100 RT	R 100 RS
Starter: Type	Bosch DF 12 V			
Starting short-circuit current A	320			
Power output kW	0.7			
Torque mkp	0.750			
Starter relay	Bosch			
Armature endplay mm (in)	0.10 . . 0.15 (0.004 . . 0.006)			
Generator (alternator): Type	Bosch G 1 14 V 20 A 21/280 W			
Drive	direct from crankshaft			
Max. output W/V	280/14			
Max. current A	20			
Resistance between phase outlets Ohm	0.62			
Charging begins at min^{-1}	980			
Max. speed min^{-1}	10 000			
Max. runout at sliprings mm (in)	0.06 (0.0024)			
Resistance between sliprings on rotor, max. Ohm	$3.4^{+0.34}$			
Min. slipring diameter mm (in)	26.8 (1.055)			
Voltage regulator: Type (Wehrle)	E 1051 B / 14 V			

Engine – electrical system

Specifications (1981 models)

Model	*R 100*	*R 100 CS*	*R 100 RT*	*R 100 RS*
Diode board: *Type (Bosch)*	*D 120 915 158 14 V 20 A*			
Coil: *Type (Bosch)*	*E 6 V*			
Spark plugs: *Thread*	*M 14 x 1.25 mm*			
Bosch	*W 5 D*			
Beru	*14–5 D*			
Champion	*N 6 Y*			
Electrode gap mm (in)	*0 6 + 0 1 (0 024 + 0 004)*			
Contact breaker Type (Bosch)	Breakerless ignition pulse generator (Hall effect transmitter) with integral centrifugal ignition timing advance system			
Timing control starts min⁻¹	1550			
Timing control ends ⁻¹	3000			

Engine – electrical system

Specifications (1981 models)

Model	R 100	R 100 CS	R 100 RT	R 100 RS
Static firing point (for engine assembly)	6° bTDC			
Adjustment range ° CS	26°			

Tightening torques Nm (lb.ft)

Armature retaining bolt	25 ± 2 (18.4 ± 1.5)	Spark plugs	20 + 5 (14.7 + 3.7)
Starter retaining bolts	47.5 (35)		

All other bolts and nuts are to be tightened according to the customary values shown in the manufacturers' tables or on the latest BMW 6002.0 standards sheet.

Starter

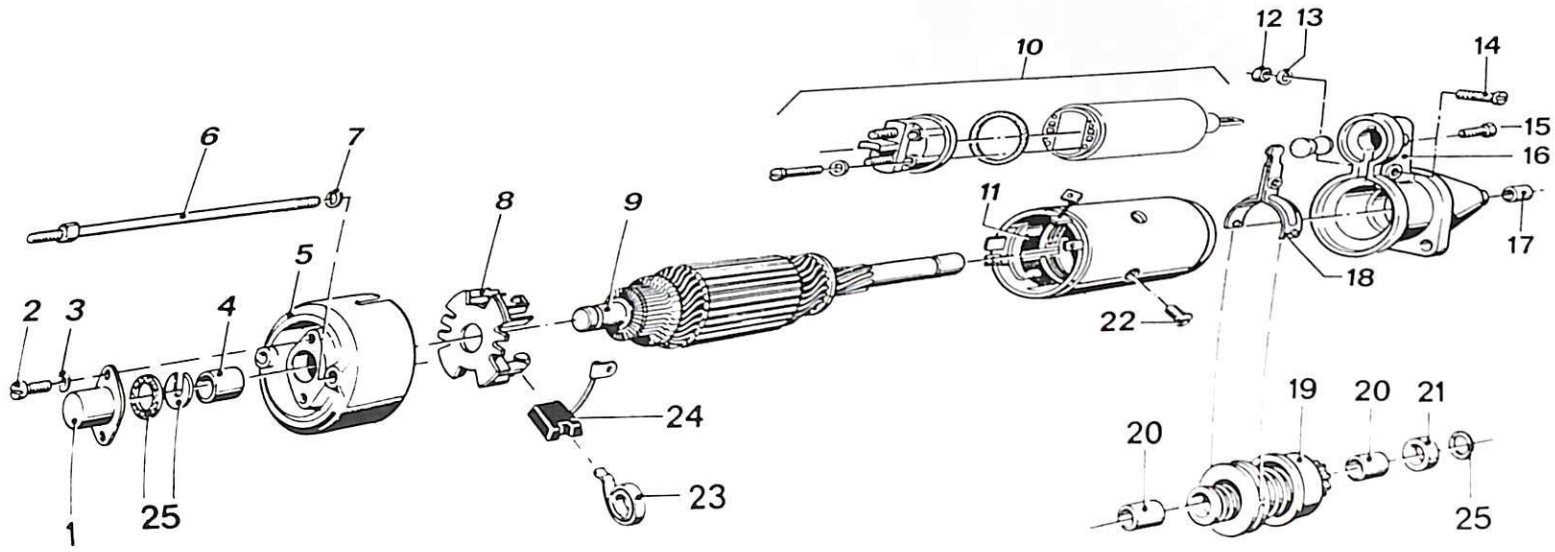

1) End cap
2) Machine screw
3) Spring washer
4) Bearing bushing
5) Commutator bearing
6) Machine screw
7) Shim washer
8) Brush holder plate
9) Armature
10) Solenoid switch
11) Exciter winding
12) Hex nut
13) Locking washer
14) Machine screw
15) Countersunk screw
16) Drive-end bearing
17) Bearing bushing
18) Actuating lever
19) Starter gears
20) Bearing bushing
21) Stop rings
22) Countersunk screw
23) Coil spring
24) Set of carbon brushes
25) Washers

Alternator

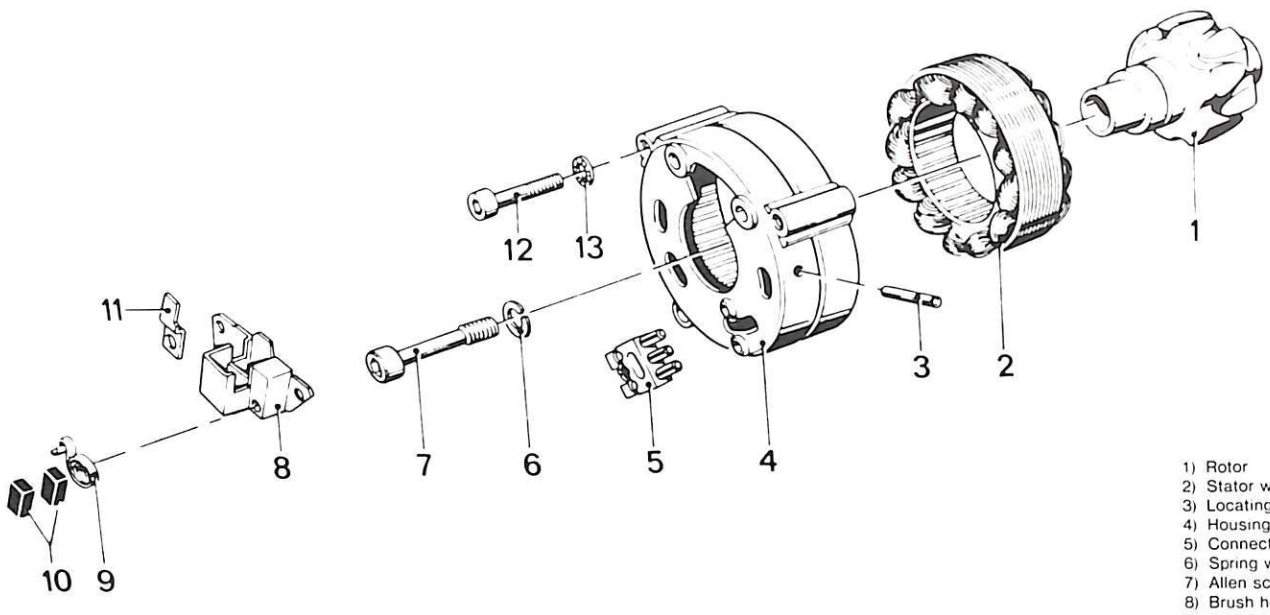

1) Rotor
2) Stator with winding
3) Locating peg
4) Housing
5) Connector
6) Spring washer
7) Allen screw
8) Brush holder
9) Coil spring
10) Set of carbon brushes
11) Flat pin plug
12) Machine screw
13) Spring washer

12 11 004 Ignition timing – adjusting (models without rotary ignition trigger)

Engine is removed (11 00 050) or fitted. Illustrations and text (apart from the two pictures with the timing gun) were prepared with engine removed.

Take off engine cover after unscrewing the three hexagon socket head bolts.

Note when fitting:

When assembling, ensure that the breather hose is first inserted in the engine cover.

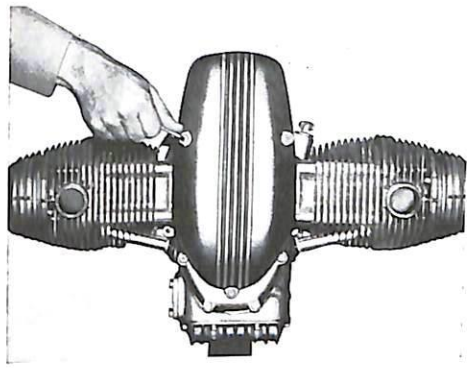

Where no dwell angle tester is available, turn the engine, with spark plugs removed, clockwise as viewed facing against direction of travel, with the aid of the hexagon socket head bolt used to secure the rotor.

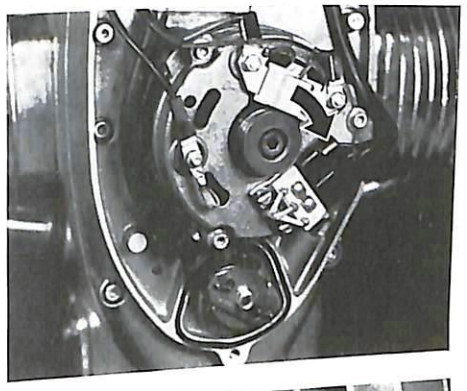

The contact breaker arm (hammer) must lift fully clear. Check points gap with feeler gauge. If necessary replace points 12 11 141.

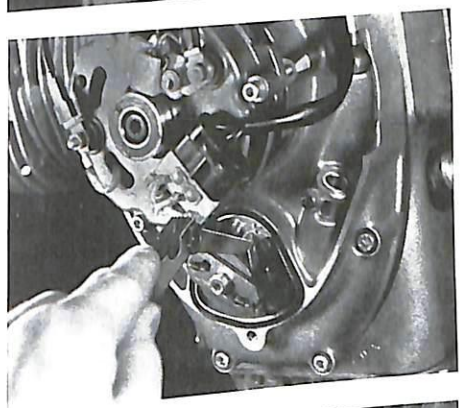

Adjusting the points gap

Slacken off the locking screw (arrow), insert screwdriver between the two pegs and in the slot of the anvil point and adjust the points gap by turning the screwdriver. Tighten locking screw.

Recheck the dwell angle and points gap.

See Technical Data for dwell angle and points gap.

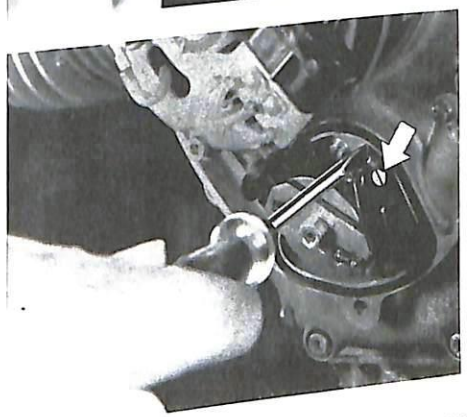

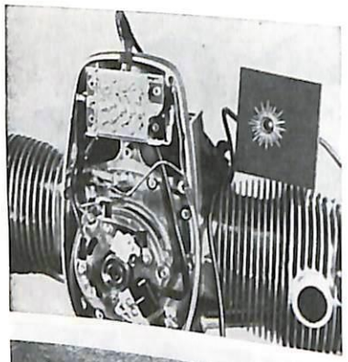

Checking ignition timing

a) With test lamp or buzzer

b) Timing light gun (stroboscope)

c) Connect the test lamp or buzzer with one terminal to the capacitor and the other to earth (e.g. to engine ignition

The test lamp must light up when the central "S" marking on the flywheel coincides with sight aperture marking when the engine is turned clockwise (centrifugal weights in rest position)
Between the left and right cylinders the ignition timing may deviate by a maximum of 6° (corresponding to 12 mm [0.47 in] on the flywheel circumference)
Markings on flywheel: notches 3° above and 3° below the "S" mark

b) Connect timing light gun (stroboscope) and aim at the flywheel marking in the sight aperture while the engine is running

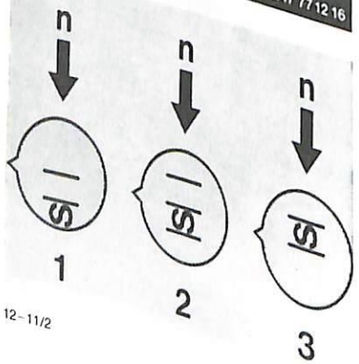

With the timing set correctly (2) the white spot coincides with the marking on the housing

As engine speed increases the flywheel marking "S" disappears upwards (adjustment commences at about 1550 min⁻¹) until as the revolution speed increases still further the flywheel marking "F" (full advance) appears from the bottom in the sight aperture and at 2800 ± 200 min⁻¹ it moves up to the housing mark.

At engine idling speed (600 – 800 min⁻¹) the white spot on the "S" flywheel marking must appear in the sight aperture. If the spot appears below the center (1) the timing is retarded, if above the center (3) the timing is advanced

12 11 004 Timing ignition (models with rotary ignition trigger)

Remove the two Allen screws and take off the engine cover

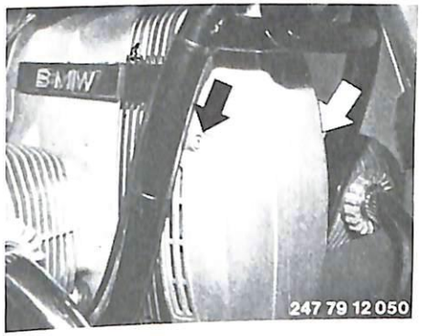

Remove the screw from the ignition trigger cover and take off the cover.

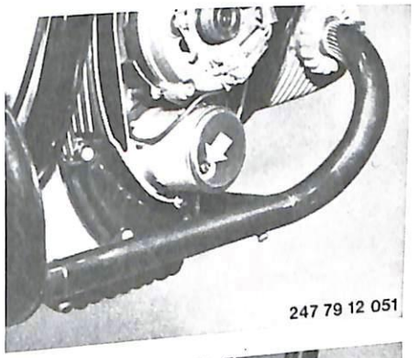

Remove the spark plugs and turn the engine over clockwise (looking from front) at the Allen screw used to retain the rotor

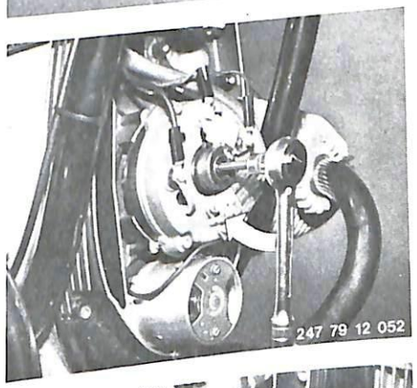

The contact breaker arm (hammer) must lift off fully. Check points gap with a feeler gauge: it must be 0.40 ± 0.05 mm (0.016 ± 0.002 in).
Renew breaker points if necessary 12 11 141

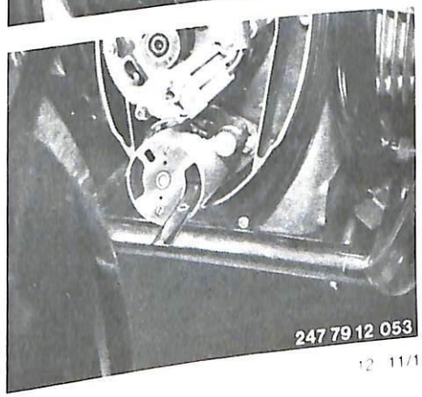

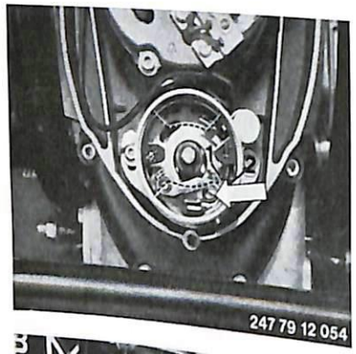

Adjusting breaker points gap

Slacken retaining screw (arrow), insert screwdriver blade into slot of opposing contact holder (1) and turn against block (2) until the correct points gap has been obtained.
Tighten the retaining screw again.
Check that the points gap has not altered and that the dwell angle is correct (use only correct dwell angle tester).
For points gap and dwell angle, see Specifications.

■

Checking ignition timing:

Connect the stroboscopic light to the battery and the ignition lead, start the engine and run at 3500 min⁻¹. When the light is directed on to the inspection hole the white spot F on the flywheel should be visible (full ignition advance).
To check the ignition advance characteristic, turn the adjusting thumbwheel on the timing light until the OT (top dead center) mark appears.
The scale marked on the timing light will then show the amount of ignition angle displacement in degrees.
For ignition advance angle, see Specifications.

■

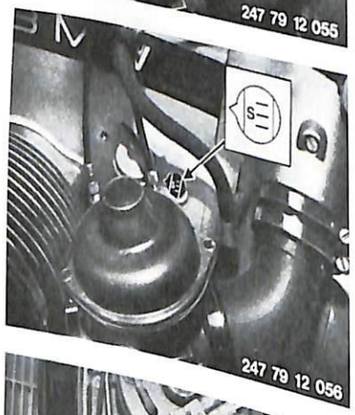

At engine idle speed (950 ± 150 min⁻¹), the central white line of flywheel mark S must be aligned with the notch in the flywheel inspection hole (2). If the upper of the tree marks (1) has reached or is below the notch mark, the ignition is retarded; if only the lower of the three marks (3) has reached or is still above the notch mark, the ignition is too far advanced.

■

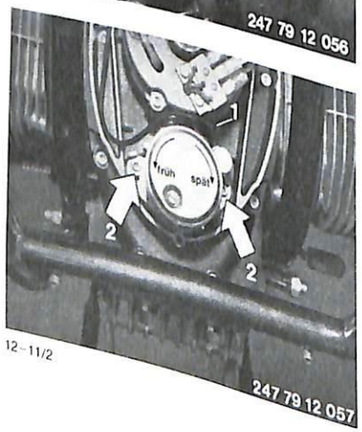

Retiming the ignition (dynamic, with engine running)

Slacken the Allen screws holding the ignition trigger (arrows). Turning the trigger assembly in the direction of engine rotation retards the ignition; turning it in the opposite direction to engine rotation advances the ignition. Note that the crankshaft and camshaft both rotate in the same direction. Retighten the screws.

■

12 11 004 Timing the ignition (static) – 1981 models

Warning: this motorcycle has transistorized coil ignition, a high-performance system on which a fatal shock can result if any live components are touched when the engine is running.

Unscrew the two Allen screws (arrows) and take off the engine end cover.

■

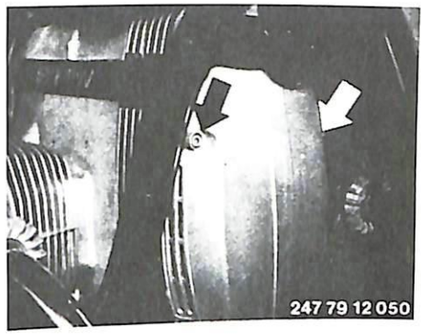

Separate the 3-pin plug (arrow) and connect ignition adjuster BMW No. 12 3 650 to the ignition unit.

Note: remove the wire clip from the plug connector.

■

With the spark plugs removed, turn the engine over clockwise (looking from front of motorcycle), using the Allen screw which retains the rotor.

■

The central white line on the flywheel ('S') must coincide with the mark at the inspection hole on the engine block (second picture, page 12–11/2) when the diode on the ignition tester comes on. If necessary, turn the ignition unit round as illustrated.

Clockwise = ignition timing retarded
Counterclockwise = ignition timing advanced

■

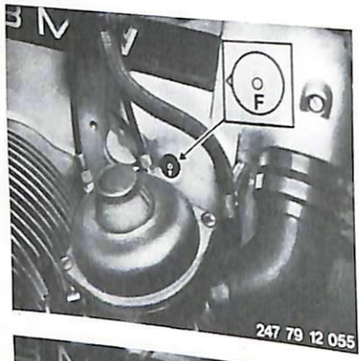

Timing the ignition (dynamic)

Connect strobe light to battery and to ignition lead. Start the engine and run up to a speed of 3500/min. When the light is directed on to the flywheel, the white 'F' spot should appear in the inspection hole (ignition fully advanced). To check the ignition control characteristic, turn the adjusting wheel on the strobe light until the 'OT' (TDC) mark appears. The calibrated scale on the light will then show the actual amount of ignition timing variation in degrees.

For ignition timing angle, see Specifications.

■

At engine idle speed (950 ± 150/min), the central white line 'S' on the flywheel must be aligned with the mark in the inspection hole. If the line is below center, the ignition is retarded, if the line is above center, the ignition is advanced too far.

For adjustment, see 12-11/1.

■

Ignition Timing Adjustment:

Slacken off two slotted screws (arrow) in the contact breaker base plate. Turning the base plate in the same rotary sense as the engine retards the timing and turning contrary to the rotary sense of the engine advances the timing (rotary sense of engine and camshaft are identical). Tighten the slotted screws.

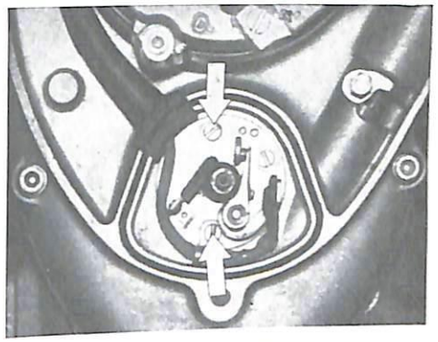

■

When checking the timing with a **test lamp,** turn the engine back 45° contrary to the direction of rotation of the engine (test lamp extinguishes) in order to eliminate all play between the moving elements for the subsequent rotation in the same direction of rotation as the engine. Recheck the timing.

Timing check with **timing light gun** (stroboscope).

If full advance cannot be reached check the ease of operation of the adjusting cam on the bearing journal.

If the timing sequence from one cylinder to the other is outside the stipulated tolerance check the bearing journal for runout.

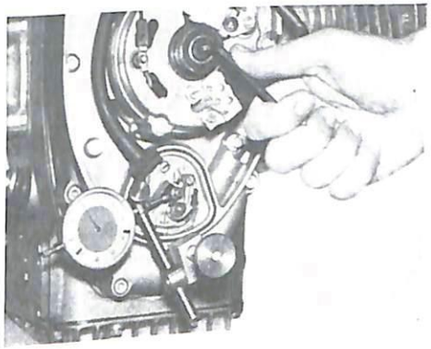

■

Warning:
To eliminate radial displacement of the camshaft on account of valve spring pressure, the rocker pivot pedestals should be slackened off or detached.

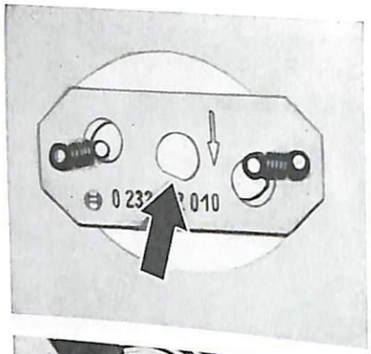

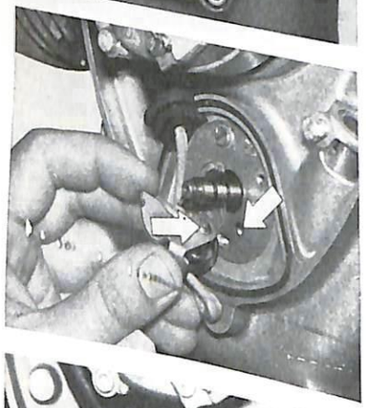

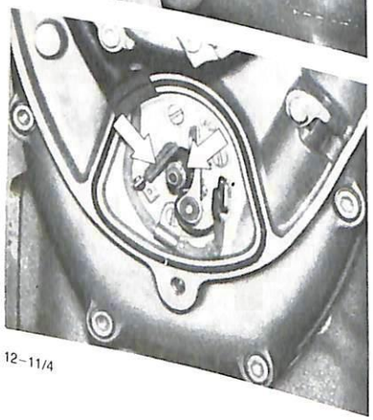

12 11 141 Contact Breaker Points – Renewing (models without rotary ignition trigger)

Take off the engine cover after unscrewing the three hexagonal socket head bolts. When refitting ensure that the breather hose is first inserted in the engine cover.

After unscrewing the hexagonal nuts remove the centrifugal timing advance.

When refitting the centrifugal timing advance note the locating surface (arrow).

■

Check the points for wear, smoothing with a point file in emergencies but preferably if worn they should be renewed. To replace the points unscrew the two cheese head screws (arrows) from the plate, pull off the lead plug from the capacitor and remove with contact breaker.

■

When fitting, ensure that the protruding brass pivot of the contact breaker arm (hammer) is inserted accurately in the relevant bore of the contact breaker plate (arrows).

■

Before fitting the centrifugal advance mechanism, check the breaker cam lubricating felt and, if necessary, rub in a little Bosch Ft 1 v 4 lubricating grease. Grease the centrifugal advance drive shaft with Bosch grease Ft 1 v 26. Ensure that the breaker cam on the drive shaft operates smoothly and easily.

■

12 11 060 Ignition trigger – removing and installing (1981 models)

Remove the front engine cover.

Unscrew and remove the Allen screws (arrows) and remove the ignition trigger from the chain case cover.

Important: Do not attempt to take the ignition trigger assembly apart – always replace as a complete unit.

■

Renew sealing ring (arrow) whenever the ignition trigger is removed.

■

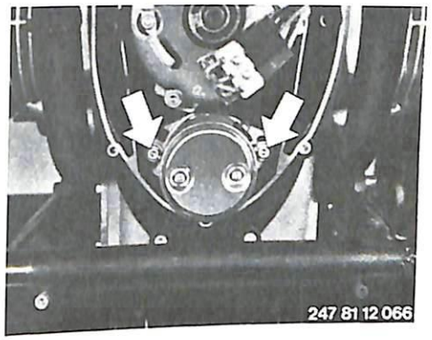

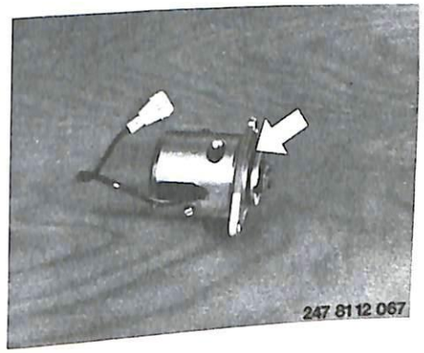

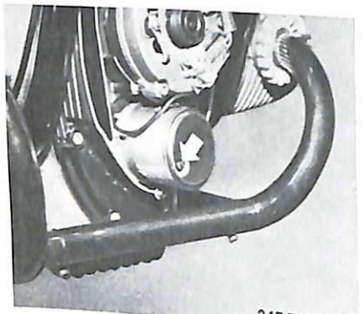

247 79 12 058

12 11 141 Breaker points – renewing (models with rotary ignition trigger)

Remove Allen screws and take off engine cover.
Remove screw at ignition trigger cover (arrow) and take off cover.

■

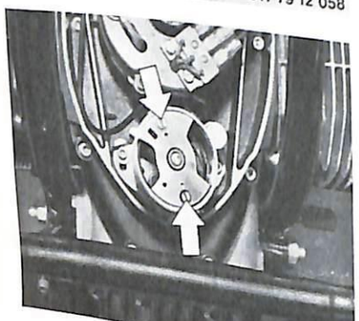

247 79 12 059

Remove the 2 screws holding the rod point bearing (arrows) and take out the bearing.

■

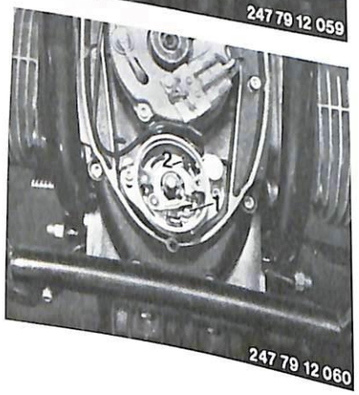

247 79 12 060

Remove the machine screw. Pull off the flat pin socket (2) and pull out the complete breaker contact.

Note:

After renewing the breaker points the ignition timing must be checked and adjusted if necessary.

■

Trouble-shooting – ignition system

Fault	Cause	Remedy
Engine will not start, or misfires	Burnt or dirty breaker points	Renew breaker points
Low engine power output	Dwell angle incorrect	Reset dwell angle
Engine will not accelerate	Centrifugal ignition advance out of action	Check centrifugal advance unit, renew if necessary
Engine starts, but stalls immediately	Break or short circuit at condenser	Renew condenser
Engine misfires – high fuel consumption	Defective ignition lead Defective spark plug cap Defective suppressor resistors	Renew ignition lead Renew spark plug cap Renew suppressor resistors

Troubleshooting – ignition system (from 1981 models on)

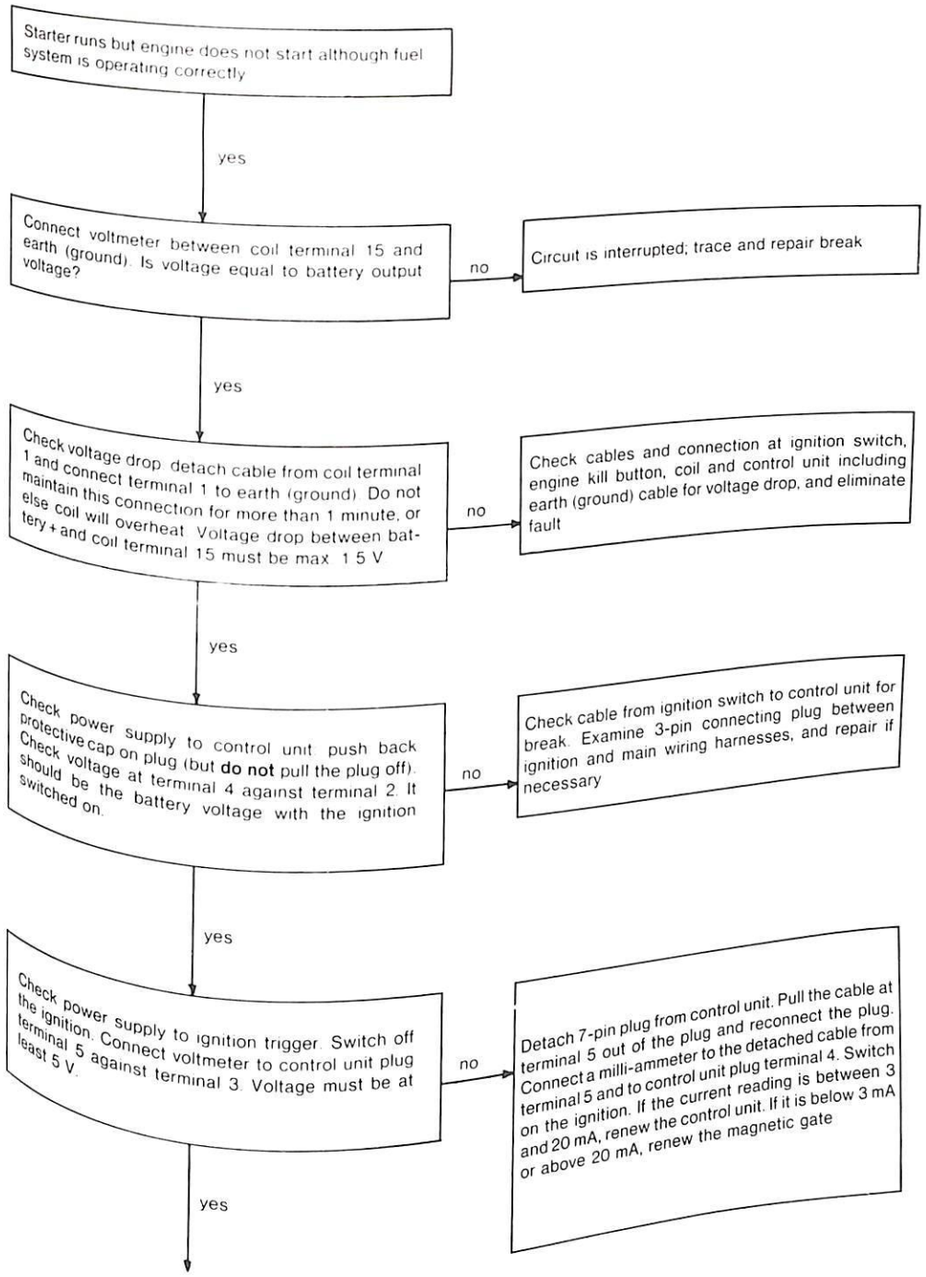

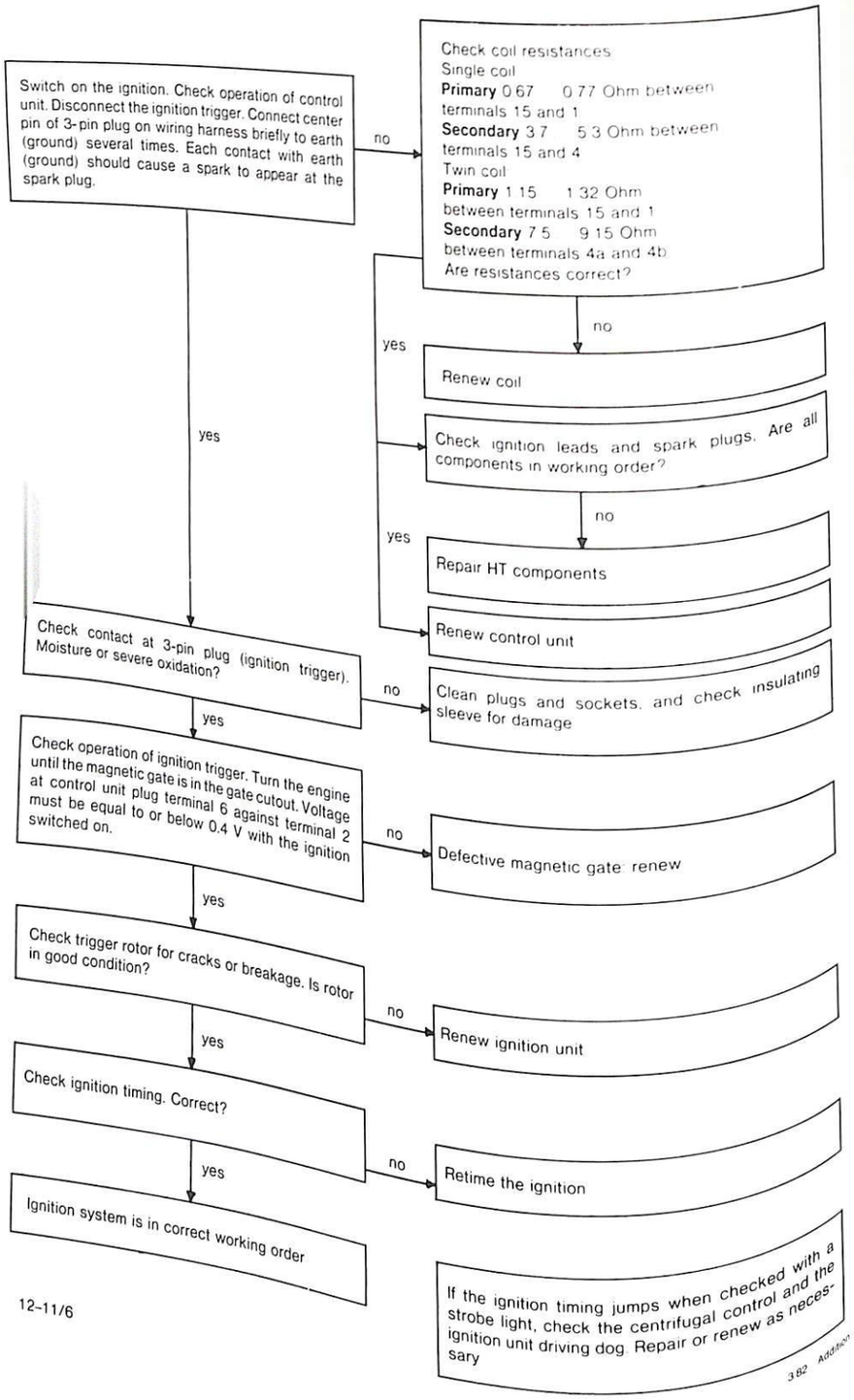

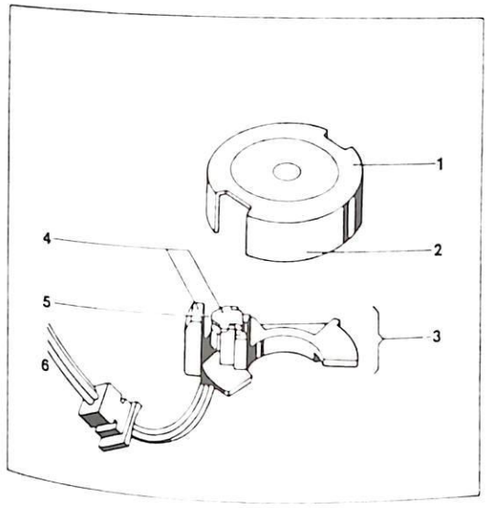

Components of Hall effect transmitter:
1 Gate rotor with cutouts
2 Gate
3 Magnetic gate
4 Guide
5 Air gap
6 Three-core transmitter cable

Warning: after the ignition switch has been turned on, the control unit cuts out after 1.5 seconds. For measurements at terminal 1, the ignition switch must be turned off and back on again.

12 13 100 One Ignition Coil – Removing and Refitting

Remove and refit fuel tank – 16 11 030.

Disconnect the battery earth lead fastened with the gearbox breather screw.

Remove leads "1" and "15" (arrows) and the high tension lead from the coil.

Unscrew the hexagonal socket head fastening bolts and remove coil.

Note when fitting:
Earth leads (arrows A and B) are fitted on the front fastening screws of the left hand coil.

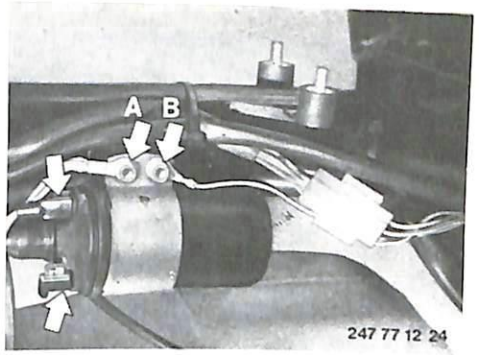

12 14 010 Control unit – removing and installing

Remove (install) fuel tank – 16 11 030.

Detach multi-pin plug (arrow) from control unit.

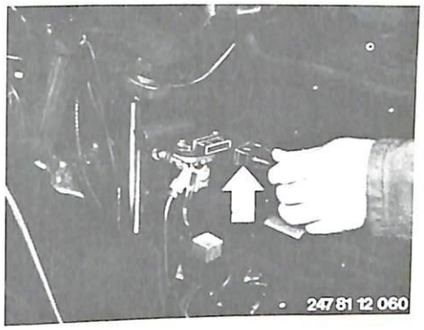

Slacken the retaining bolts on the control unit, using a ring wrench at the heat sink to prevent movement.

When installing: to avoid corrosion and the resulting poor heat transfer, apply Curil K 2 to the joint face between the control unit and the heat sink.

12 14 025 Heat sink – removing and installing

Remove (install) fuel tank – 16 11 030.

Remove (install) control unit – 12 14 010.

Unscrew the bolts holding the heat sink and take it off.

12 31 009 Alternator, Diode Carrier and Regulator – Testing

The picture shows the arrangement of the alternator, diode carrier and regulator.

Warning: The leads between battery, alternator and regulator should be parted only when the engine is stationary. If the battery is charged with a charger while still on the motor cycle, the positive and negative leads must be disconnected from the battery.

The battery warning lamp is used to pre-excite the alternator.

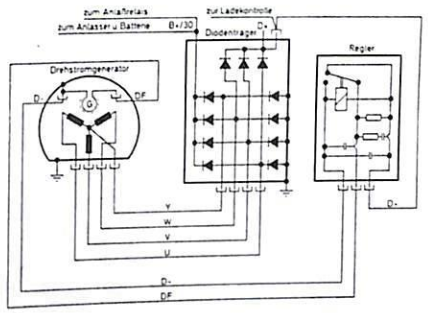

■

To check the regulator remove the B+ (black lead) from the diode carrier while the engine is stationary. Connect the volt meter to B+ and D-. Start engine. The voltage should read 13.5 to 14.2 volts shortly after the regulator commences operation.

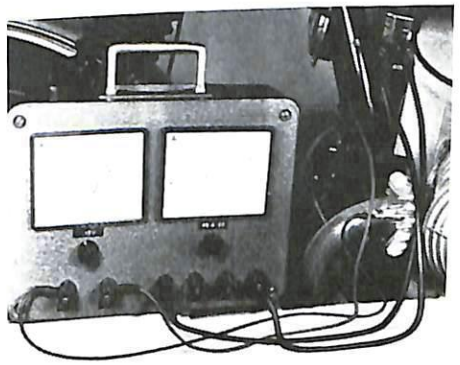

To check the charge current interpose an ammeter (measuring range 15–20 A) in the B+ lead. Switch on a consumer unit or slide resistor (potentiometer) allowing a loading of up to 13 amps, connect parallel with battery.

Allow engine to run at about 4000 rpm. Set maximum current on sliding resistor (potentiometer). Read off regulator voltage at load on volt meter, see Technical Data for values.

■

With the aid of a voltmeter (measuring range approx. 5 V) the voltage difference can also be measured direct between D+ and B+.

A voltage difference of up to 0.5 V indicates a fault in the regulator.

With a voltage difference of 1.5 V to 4 V the fault is in the diode carrier.

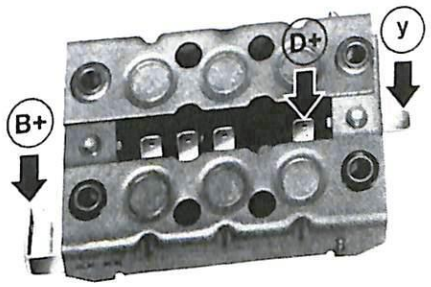

■

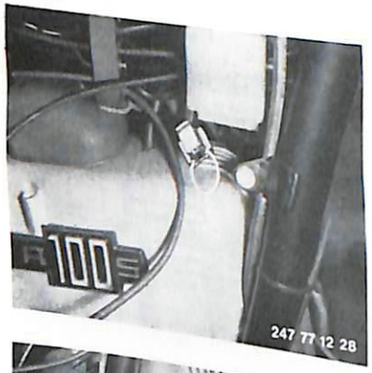

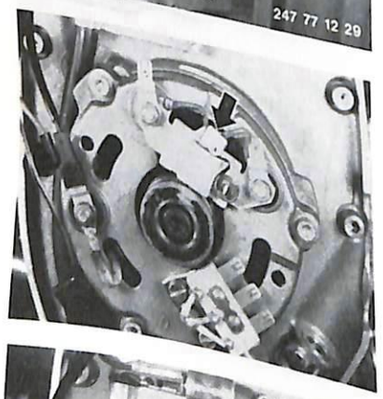

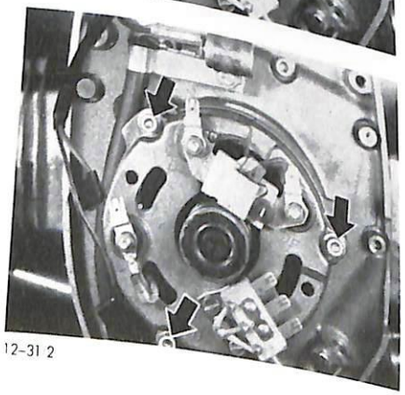

12-31 2

12 31 019 Alternator with Regulator – Quick Test

Fuel tank removed – 16 11 030

The check should be carried out only when the battery charge telltale remains permanently on while the engine is running.

Unplug the multiple plug from the regulator while the engine is stationary. Use a wire bridge to connect lead D - (blue) with lead DF (blue-black).

Start engine and allow to run at approx. 1000 ... 2000 rpm. If the battery charge telltale extinguishes immediately, this indicates a faulty regulator.

If the battery charge telltale glows or continues to display a bright light, this indicates that the alternator is defective.

■

12 31 020 Alternator – Removing and Refitting

Engine removed (11 00 050) or fitted.
Take off engine cover after unscrewing the three hexagonal socket head bolts.

Note when fitting:
During installation ensure that the breather hose is first inserted in the engine cover.

■

Pull the three-pin flat plug from the housing. Lift the brushes slightly and block in this position with thrust springs.

■

Unscrew the three hexagonal socket head bolts from the housing and remove housing.

■

Unscrew the rotor fastening screw and press the rotor off the crankshaft stump with the aid of screw press BMW 12 3 600.

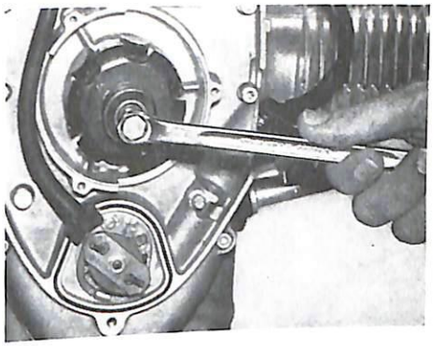

■

12 31 212 Alternator – Overhauling

Remove and refit alternator – 12 31 020

Unscrew two nuts from the inside of the housing and draw out brush holder with brushes. If the brushes have to be renewed care must be taken when soldering (arrow) to ensure that no solder escapes into the copper wires.

Fit insulating bushes on the brush holder stud bolts. Re-tighten brush holder in housing, not forgetting insulating washers.

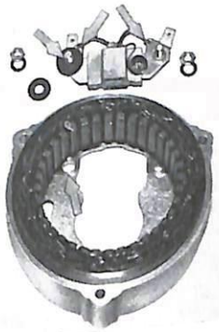

■

12 31 689 Stator Winding and Rotor – Testing

Overhaul alternator – 12 31 212

Check stator winding for shorting with 40 V AC, make three measurements in each case.

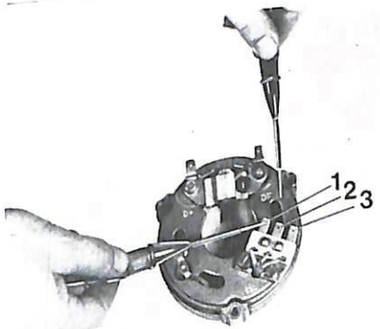

Check the resistance alternatively between the phase outputs, see Technical Data for values.

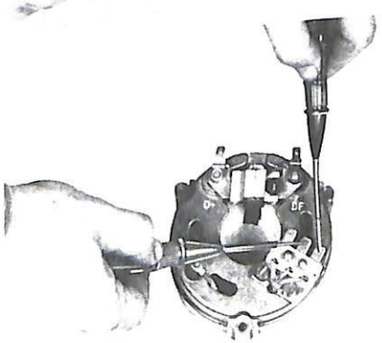

■

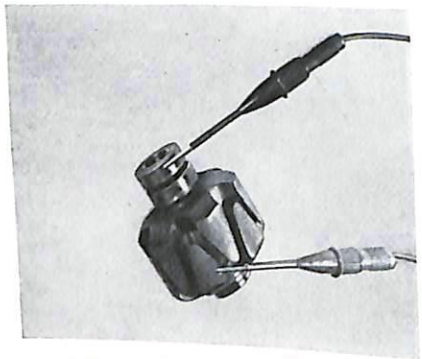

After removal, check the claw pole rotor with 40 V AC for shorting to ground (earth).

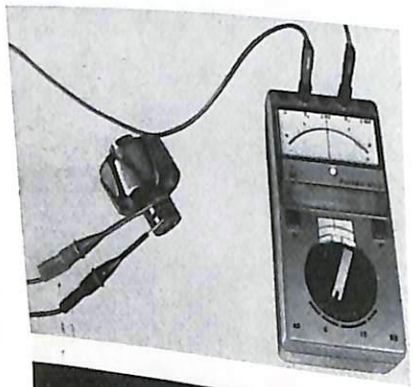

Check exciter winding (ohmmeter).

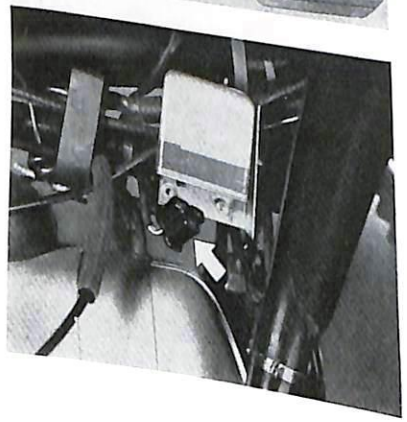

12 32 000 Regulator Switch for Alternator – Removing and Refitting

Remove fuel tank – 16 11 030

Detach battery earth lead. Remove plug (arrow) and take off regulator after unscrewing the two Allen screws.

Troubleshooting – alternator

Malfunction	Cause	Remedy
Alternator runs noisily	Carbon brushes whistling	Skim the sliprings, renew the carbon brushes
Telltale lamp lights up at half-intensity when engine is running	Poor cable contact	Check cables and connections
	Defective regulator	Renew regulator
	Defective carbon brushes	Renew carbon brushes
	Defective rectifier diode or short to earth (ground)	Renew rectifier diode
	Stator has short to earth (ground)	Renew stator
	Partial short to earth (ground) in rotor	Renew rotor
Battery producing large amounts of gas	Poor contact between regulator and alternator	Check cable connections at regulator and alternator
	Defective regulator	Renew regulator
Telltale lamp lights up at half or full intensity when engine is running	Defective regulator	Renew regulator
	Break or short-circuit at cables to lamp	Check cables and connections
	Defective carbon brushes	Renew carbon brushes
	Defective rotor winding	Renew rotor
	Break in power supply circuit	Check cable connections
	Diodes or diode board defective	Check diodes or diode board, and renew if necessary
	Short to earth (ground) at cable D+/61	Eliminate short circuit or renew cable
Telltale lamp does not light up when engine is running	Telltale lamp bulb blown	Install a new 3 Watt bulb
	Cable 61 interrupted	Trace and repair break
Telltale lamp does not light up when engine is stopped but ignition switched on	Telltale lamp bulb blown	Install a new 3 Watt bulb
	Battery flat	Recharge battery
	Battery defective	Renew battery
	Cable loose or defective	Renew cable, check and tighten connections
	Short circuit at alternator positive diode	Disconnect charge cable at once or else battery will discharge when at a standstill; have alternator repaired
	Carbon brushes worn	Renew carbon brushes
	Oxide coating on sliprings, break in rotor winding	Repair alternator

12 41 009 Starter – Testing in situ

Check the state of the battery charge, see Technical Data for values.

For the purpose of checking the starter, engage fourth gear and depress the footbrake. Actuate starter for two to three seconds. The starter voltage should not drop below 8 volts under load and must be uniform with the volt meter at 1 and 2, otherwise the earth connection to engine or battery is poor, at the same time read off the current input from the ammeter, see Technical Data.

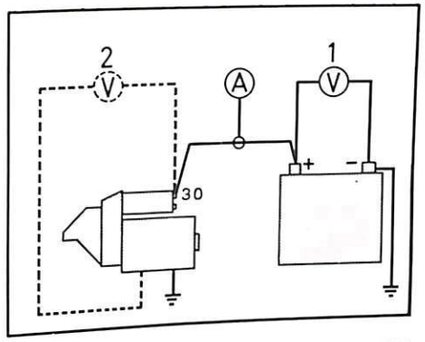

Note:
If, with the gear engaged, the engine should be killed, it is possible to start it again without disengaging the gear just by pulling the clutch.

1 Starting relay
2 Starter contact
3 Neutral indicating light
4 Neutral indicating switch
5 Clutch switch

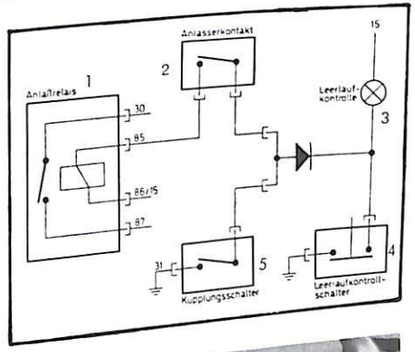

12 41 020 Starter – Removing and Refitting

Remove and refit air filter element – 13 72 000.

Remove and refit fuel tank – 16 11 030

Detach both choke cables at the carburettors and lay aside the left-hand half shell of the air filter housing with choke cables.

Unscrew nut (1) with straight ring spanner, slacken hexagonal bolt (2).

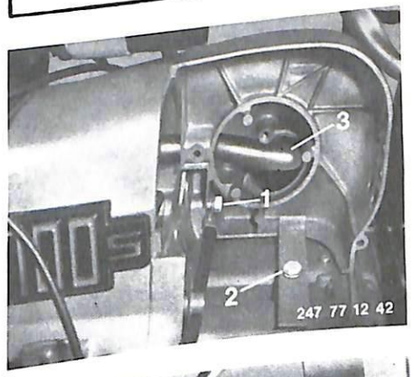

Remove the right-hand half shell of the air filter housing, at the same time pushing the breather hose (3) to the rear.

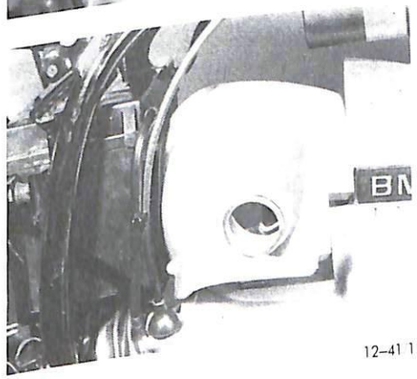

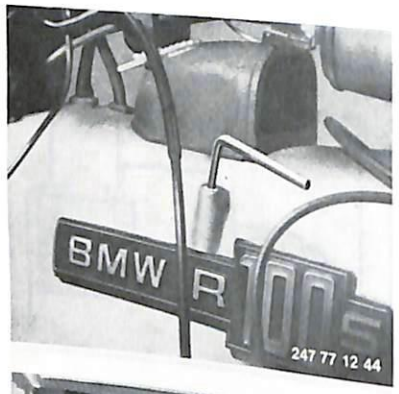

Slacken the two Allen screws and tilt the starter cover to the right to remove.

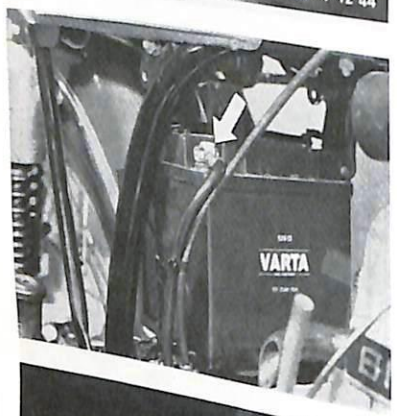

Raise cover at negative battery post and disconnect lead (arrow).

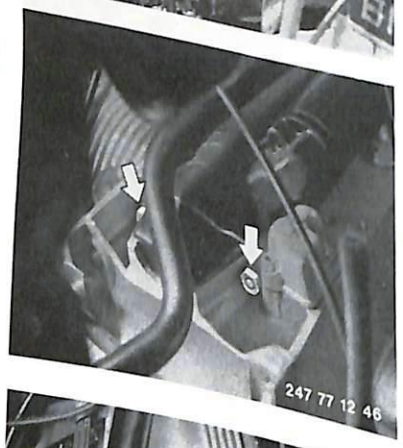

Detach lead from starter.

Remove rear fastening screws (arrows).

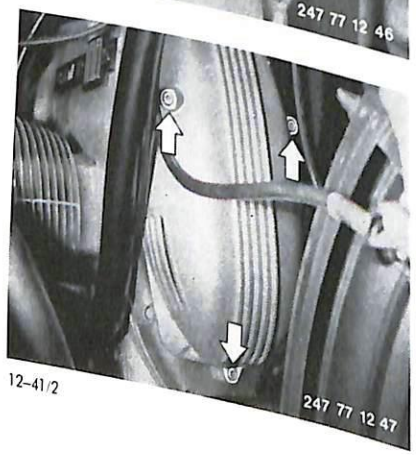

After unscrewing the three Allen screws, remove the engine cover.

Unscrew the hexagonal bolt (arrow) with a box spanner.

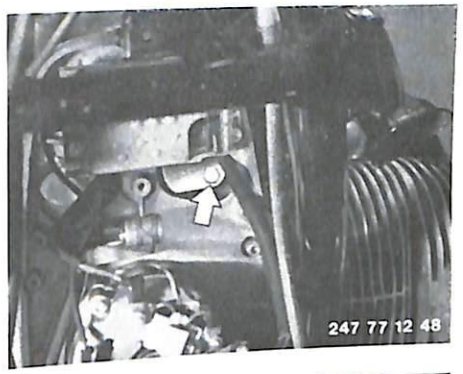

Remove engine breather hose 11 15 101

Lift the starter forward out of its guide

12 41 513 Starter – Dismantling and Assembling

Remove and refit starter 12 41 020

Unscrew the exciter lead
Detach solenoid switch
Disengage engaging arm

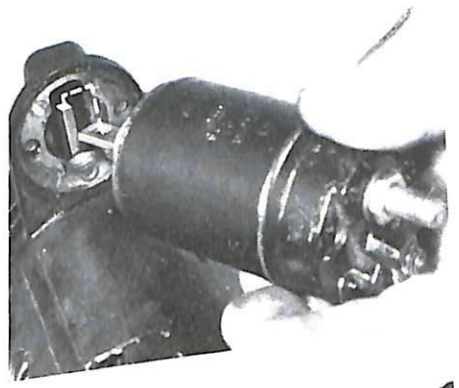

Remove dust cap
Take off lock washer, shim and gasket
Unscrew the pole housing screws
Pull off the cap

Note when fitting: Compensate axial armature float, see Technical Data
Check commutator bearings

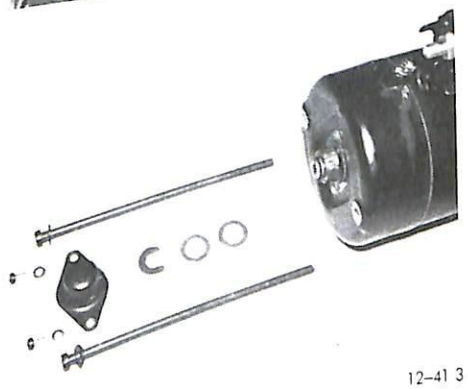

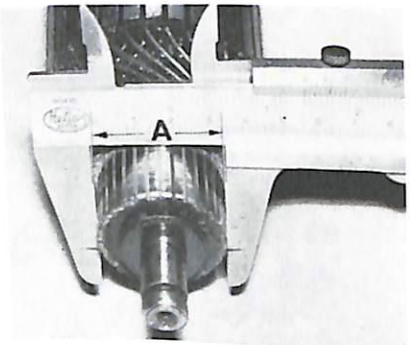

Superfinish the commutator. The commutator diameter (A) must not be less than 33 mm (1.3 in).

■

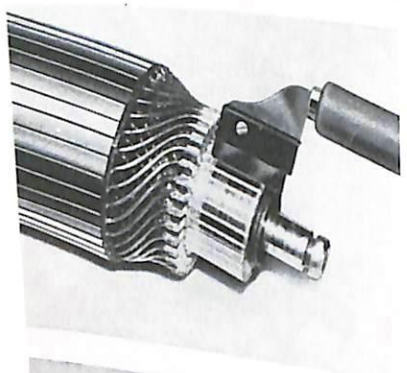

Undercut the commutator segments, and remove any swarf or metal dust with polishing cloth. The insulation should be 0.5 mm (0.02 in) deeper than the segments.

■

Press out worn bushing.

Note when fitting:
Before fitting the new bushing it should be soaked for at least 30 minutes in engine oil and pressed in to a flush fit.

■

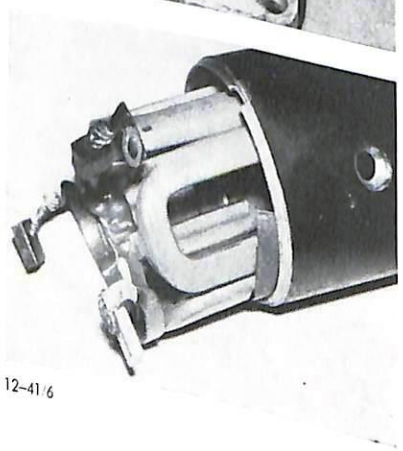

■

12 41 701 Exciter Coil – Renewing

Starter – dismantle and re-assemble 12 41 513.

Mark the pole terminals to ensure the same position on re-assembly. Unscrew the four pole terminal screws. Remove the pole terminals and exciter coil from the pole housing.

Note when fitting:
Before finally tightening down the pole screws, ensure that the pole terminals are aligned parallel to the longitudinal axis.
Lay paper insulating strip between the exciter coil and pole housing.

■

Fauld finding on starter

Fault	Test method	Remedy
Starter fails to turn when starter button is operated	Switch on light a) Light does not burn Battery dead Battery feed interrupted b) Light burns, becoming gradually dimmer as starter is actuated c) Light burns but extinguishes immediately starter is actuated Oxidized battery terminals or earth connection d) Light burns normally Bridge terminals 50 and 30 on the starter The starter turns Ignition/starter switch defective or input leads interrupted e) Light burns normally Solenoid switch actuates, starter fails to turn. Bridge with an appropriate lead from the battery positive pole to terminal 30 on the starter. Starter turns Solenoid switch contact fouled or scorched	a) Measure battery voltage Recharge battery Check battery leads and terminals b) Recharge battery c) Clean battery terminals or earth connection d) Replace ignition/starter switch, remedy interruption e) Replace solenoid switch
Starter fails to turn when lead is run direct from the battery positive pole to terminal 30	a) Brushes too short b) Brushes jamming c) Inadequate brush pressure	a) Replace brushes b) Release jamming c) Replace thrust springs
Starter turns too slowly, fails to turn engine over	a) Commutator fouled b) Faulty armature or energizer coil	a) Clean commutator b) Repair starter
Starter runs at high speed but engine does not turn or moves only in jerks	a) Drive pinion defective b) Flywheel gear ring defective c) Drive pinion not engaging, dirty or damaged spiral track	a) Renew drive pinion b) Renew flywheel gear ring c) Have starter repaired
Drive pinion does not engage and starter runs at high speed	a) Very dirty drive pinion b) Defective coil spring in solenoid switch c) Badly damaged teeth on flywheel gear ring	a) Clean drive pinion bearings b) Renew solenoid switch c) Renew gear ring
Drive pinion engages but starter does not turn engine over	a) Roller freewheel in drive pinion is slipping	a) Renew drive pinion

13 Fuel supply and mixture control

Specifications	Page	13– 0/3
Specifications (1979 models)		13– 0/5
Specifications (1981 models)		13– 0/7
13 00 004	Engine idle speed and fuel-air mixture – adjusting	13–00/1
13 10 004	Fuel level – checking and adjusting	13–10/1
13 10 009	Carburettor – cleaning	13–10/1
13 10 100	Left and right carburettors – removing and installing	13–10/1
13 10 370	Cold-start (choke) housing – detaching and attaching	13–10/2
13 23 080	Choke control lever – removing and installing (1981 models)	13–23/1
13 23 021	Choke cable – removing and installing (handlebar end) –1981 models	13–23/2
13 23 061	Choke cable – removing and installing (carburettor end) – 1981 models	13–23/2
13 72 000	Air cleaner element – removing and installing (single-sided breather)	13–72/1
13 72 000	Air cleaner element – removing and installing (double-sided breather)	13–72/1
13 72 000	Air cleaner element – removing and installing (1981 models)	13–72/1
13 72 110	Intake venturi – removing and installing (1981 models)	13–72/1
13 72 130	Air cleaner housing – removing and installing (1981 models)	13–72/2

Technical Data

Model	R 60 7	R 75 7	R 80 7	R 100 7	R 100 S	R 100 RS
Carburettor: Construction	2 inclined Bing slide type carburetors with needle jet and central level float	2 inclined Bing constant vacuum carburetors with needle jet, vacuum plunger, throttle butterfly and central lever float				
Carburettor type: Left-hand carburettor Right-hand carburettor	1 26 123 1 26 124	64 32 13 64 32 14	64 32 201 64 32 202	64 32 19 64 32 20	94 40 103 94 40 104	94 40 105 94 40 106
Carburettor throat diameter, mm(in)	26 (1.02)	32 (1.26)			40 (1.57)	
Main jets	140	145		150	170	
Needle jets	2.68 with accelerator pump	2.66		2.68	2.66	2.68
Jet needle number	4	46—241			46—341	
Needle position	2	3				2
Starting jet diameter, mm(in)	0.9 (0.035)	60		70	80	80
Starting air jet diameter, mm(in) (starting chamber vent)	2.0 (0.079)	2.0 (0.079)				
Mixture passage dia. mm(in)	7.5 (0.30)	—		6.0 (0.24)		
Air passage dia. mm(in)	6.0 (0.24)	—		6.0 (0.24)		
Diameter of mixture bores in rotary slider, mm(in)	—	2.0 1.2 0.7 (0.079/0.047/0.028)				
Idling jets	40	50			45	
Idling air jet diameter, mm(in)	0.8 (0.031)	1.0 (0.04)				
Idling air regulating screw opened (turns)	1/4—1 1/4	—				
Idling mixture regulating screw opened (turns)	—	1/2—1		1	1—1 1/4	
Bypass bore no. 1, dia., mm (in) Bypass bore no. 2, dia., mm (in)	0.8 (0.031)	0.7 (0.028) 0.65 (0.026)			0.8 (0.031) 0.65 (0.026)	0.8 (0.031) 0.65 (0.026)
Float valve diameter mm(in)	2.2 (0.087)	2.5				

Technical Data

Model	R 60/7	R 75/7	R 80/7	R 100/7	R 100 S	R 100 RS
Float chamber vent bore diameter, mm(in)	—			2.0 (0.08)	2.0 (0.08)	2.0 (0.08)
Throttle valve	20—570	—				
Idling outlet bore diameter, mm(in)	0.8 (0.031)	1.0 (0.04)				
Induction air filter	A common "Micro Star" dry air filter for both carburetors					
Fuel System: Fuel grade	Super (premium)		Super (premium) Regular *	Super (premium)		
Minimum octane rating (RM) to DIN 51 600 standard	98		98 91 *	98		
Fuel tank capacity (litres/Imp gal.)	24 (5.3/6.3) Incl. 3.0 (0.6/0.8) reserve					

Specifications (1979 models)

Model	R 80/7	R 100 T	R 100 S	R 100 RT	R 100 RS
Carburettor Pattern	Two inclined Bing constant-depression carburettors with needle jet, vacuum slide, throttle and central lever float				
Carburettor type left / right	64/32/201 / 64/32/202	94/40/103 / 94/40/104	94/40/105 / 94/40/106		
Carburettor throat dia. mm (in)	32 (1.26)	40 (1.57)			
Main jet	145	170			
Needle jet	2.66	2.68			
Jet needle number	46 – 241	46 – 341			
Needle position	3	2			
Starting jet dia.	60	80			
Starting air jet dia. mm (in)	2.0 (0.08)				
Mixture passage dia. mm (in)	–	6.0 (0.236)			
Air passage dia. mm (in)	–	6.0 (0.236)			
Diameter of mixture passages in rotary slide mm (in)	2.0/1.2/0.7 (0.08/0.048/0.028)				
Idle jet	50	45			
Idle air jet dia. mm (in)	1.0 (0.04)				
Idle mixture regulating screw opening (turns)	½ to 1	1 to 1¼			
Bypass passage 1 dia. mm (in) / Bypass passage 2 dia. mm (in)	0.7 (0.028) / 0.65 (0.026)	0.8 (0.032) / 0.65 (0.026)			
Float valve dia. mm (in)	2.5 (0.098)				

Specifications (1979 models)

Model	R 80/7	R 100 T	R 100 S	R 100 RT	R 100 RS
Float chamber vent dia. mm (in)	2.0 (0.08)				
Idle outlet passage dia. mm (in)	1.0 (0.04)				
Intake air cleaner	Common "micro-star" dry-type filter for both carburettors				
Fuel system Fuel	Super (premium) Regular *	Super (Premium)			
Min. octane number, research method (to DIN 51600 standard)	98 91*	98			

* Low-compression engine

Specifications (1981 models)

Model	R 100	R 100 CS	R 100 RT	R 100 RS
Carburettor Pattern	Two inclined Bing constant-depression carburettors with needle jet, vacuum slide, throttle and central lever float			
Carburettor type left right	94/40/111 94/40/112			
Carburettor throat dia. mm (in)	40 (1.57)			
Main jet	160			
Needle jet	2.66			
Jet needle number	46–341			
Needle position	3			
Starting jet dia.	80			
Starting air jet dia. mm (in)	2.0 (0.08)			
Mixture passage dia. mm (in)	6.0 (0.236)			
Air passage dia. mm (in)	6.0 (0.236)			
Diameter of mixture passages in rotary slide mm (in)	2.0/1.2/0.7 (0.08/0.048/0.028)			
Idle jet	45			
Idle air jet dia. mm (in)	1.0 (0.04)			
Idle mixture regulating screw opening (turns)	1 to 1¼			
Bypass passage 1 dia. mm (in) Bypass passage 2 dia. mm (in)	0.8 (0.032) 0.65 (0.026)			
Float valve dia. mm (in)	2.5 (0.098)			

Specifications (1981 models)

Mixture preparation				
Model	R 100	R 100 CS	R 100 RT	R 100 RS
Float chamber vent dia. mm (in)	2.0 (0.08)			
Idle outlet passage dia. mm (in)	1.0 (0.04)			
Intake air cleaner	Common plate-type filter for both carburettors			
Fuel system Fuel	Regular	Super (Premium)		
Min. octane number, research method (to DIN 51600 standard)	91	98		

1/26 slide-type carburettor
(with choke and double float)

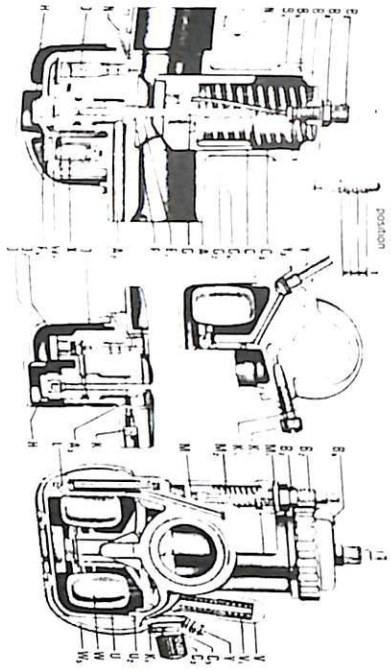

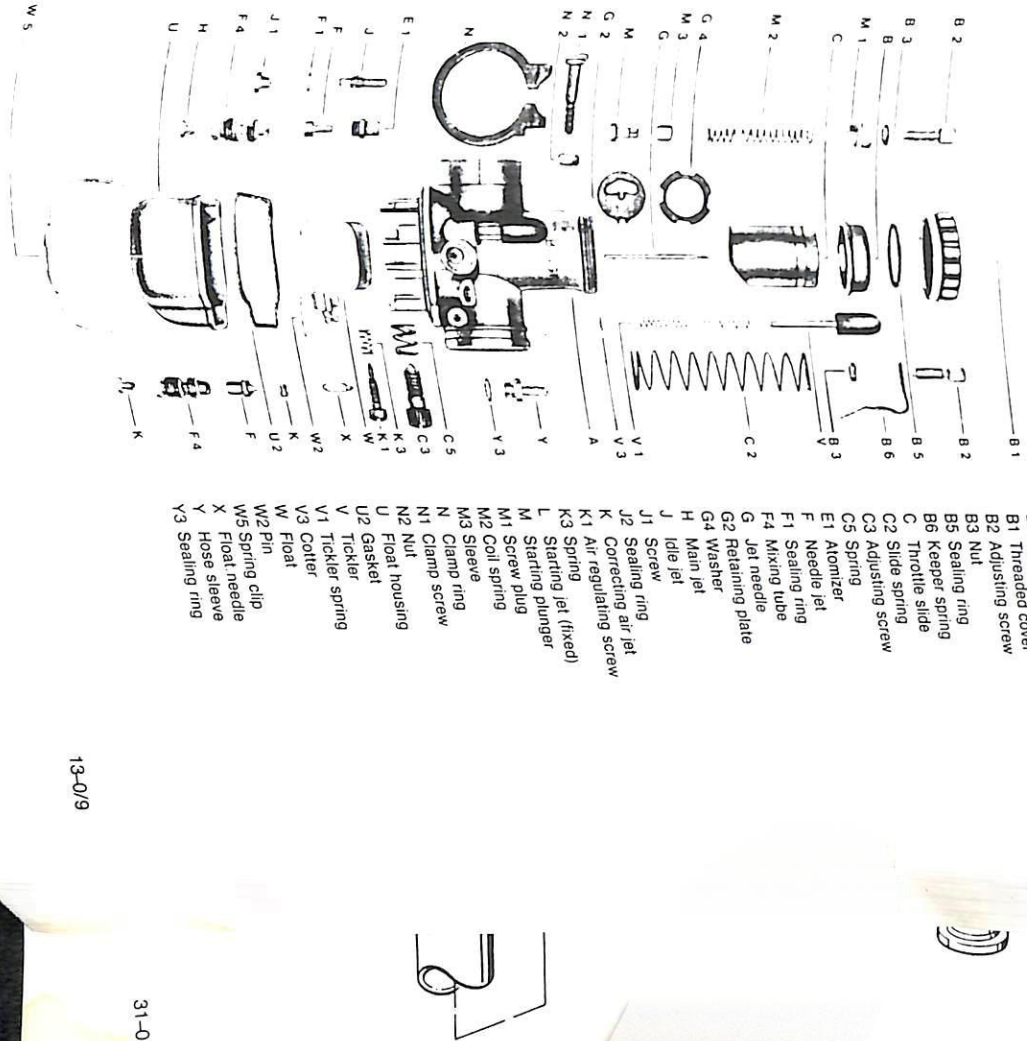

A Carburettor body
A2 Atomizer air passage
A3 Correcting air passage
B Cover plate
B1 Threaded cover
B2 Adjusting screw
B3 Nut
B5 Sealing ring
B6 Keeper spring
C Throttle slide
C2 Slide spring
C3 Adjusting screw
C5 Spring
E1 Atomizer
F Needle jet
F1 Sealing ring
F4 Mixing tube
G Jet needle
G2 Retaining plate
G4 Washer
H Main jet
J Idle jet
J1 Screw
J2 Sealing ring
K Correcting air jet
K1 Air regulating screw
K3 Spring
L Starting jet (fixed)
M Starting plunger
M1 Screw plug
M2 Coil spring
M3 Sleeve
N Clamp ring
N1 Clamp screw
N2 Nut
U Float housing
U2 Gasket
V Tickler
V1 Tickler spring
V3 Cotter
W Float
W2 Pin
W5 Spring clip
X Float needle
Y Hose sleeve
Y3 Sealing ring

Type 64 . . . 94 constant-depression carburettor

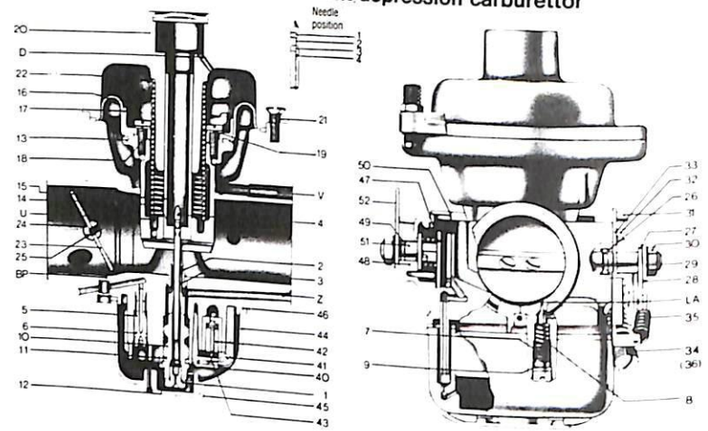

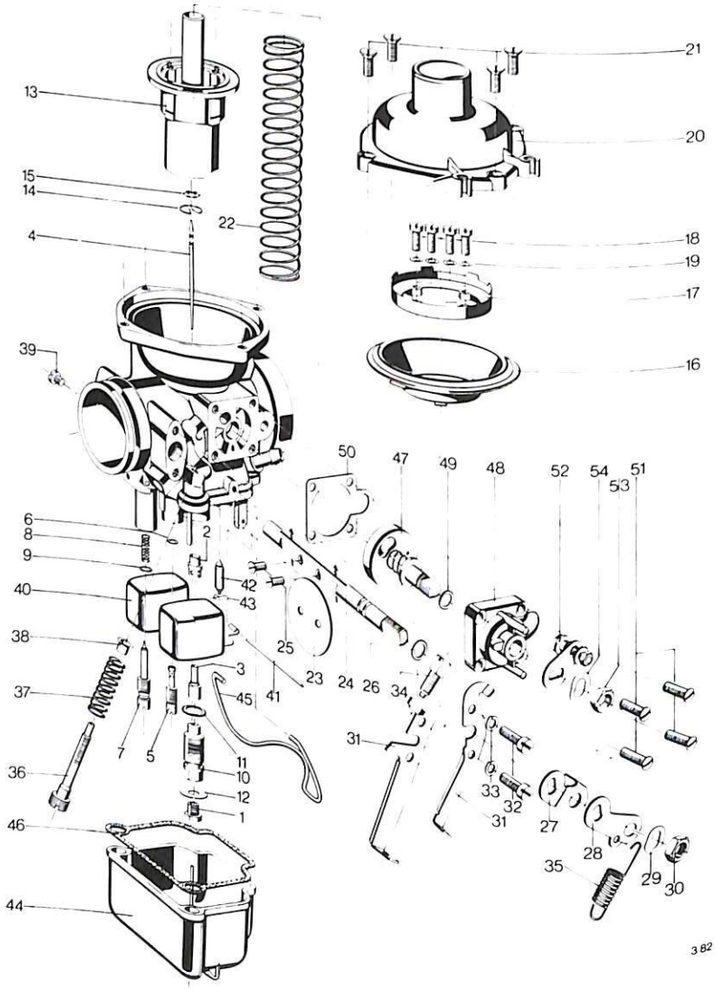

Type 64 . . . 94 carburettors

No.	Designation
1	Main jet
2	Atomizer
3	Needle jet
4	Jet needle
5	Idle jet
6	Sealing ring
7	Mixture regulating screw
8	Spring
9	Sealing ring
10	Jet block
11	Sealing ring
12	Washer
13	Plunger
14	Keeper
15	Washer
16	Diaphragm
17	Retaining ring
18	Screw
19	Lock washer
20	Cover
21	Screw
22	Spring
23	Throttle butterfly
24	Throttle pivot shaft
25	Screw
26	Sealing ring
27	Lever

No.	Designation
28	Lever
29	Lock washer
30	Nut
31	Retaining arm
32	Screw
33	Lock washer
34/36	Adjusting screw
35	Spring
37	Spring
38	Sleeve
39	Screw
40	Float
41	Peg
42	Float needle
43	Clamp spring
44	Float cap with starting jet
45	Spring clip
46	Gasket
47	Choke unit
48	Choke housing
49	Sealing ring
50	Gasket
51	Screw
52	Lever
53	Nut
54	Lock washer

Air cleaner (from 1981 models on)

1) Air cleaner housing, upper section
2) Air cleaner element
3) Air cleaner housing, lower section
4) Clip
5) Intake pipe
6) Hose clip
7) Rubber sleeve
8) Hex bolt
9) Washer
10) Hex nut
11) Machine screw

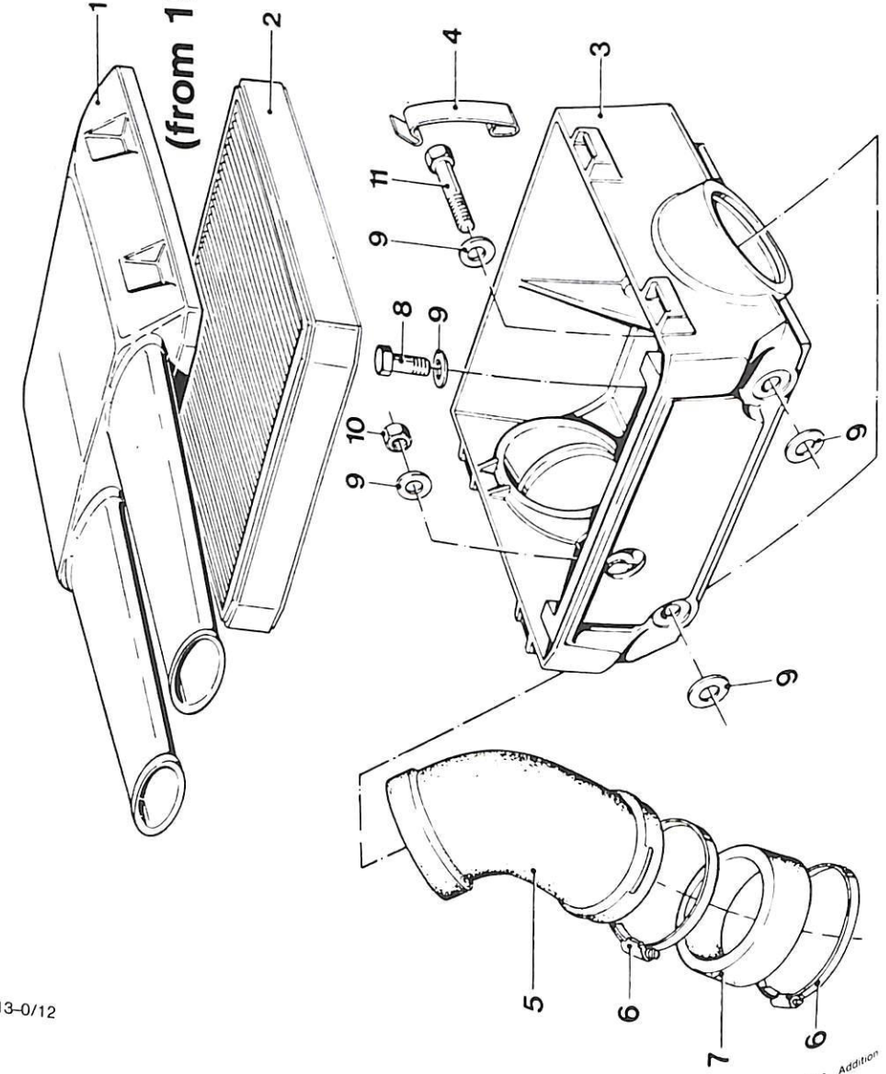

3.82 Addition

13 00 004 Engine idling – adjusting

Adjust engine idling with engine running at normal operating temperature and throttle twistgrip closed
For idle speed, see Technical Data
Adjust throttle cable free travel to 4 mm (0.16 in) initially, to prevent the throttle slides or butterflies from being suspended from the cables without any play

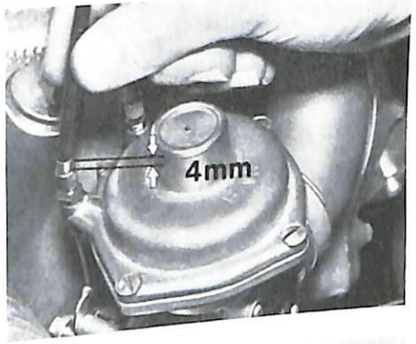

Carburetor with throttle slide
Pull off first one spark plug cap, then the other, to determine which cylinder departs the most from the normal idle speed of the engine. Increase idle speed at this cylinder to match the faster cylinder. This is done by turning throttle slide stop screw 2 clockwise (to speed up engine) or anticlockwise (to slow down engine).
To obtain the best possible mixture, carefully turn idle air regulating screw 1 in both directions and listen to the engine; if engine speed rises slightly, this is the more favorable setting.
Note:
Insert a suppressor cartridge or a suitable piece of metal at the detached spark plug cap to prevent sparks from jumping the gap to the protective seal and damaging it.

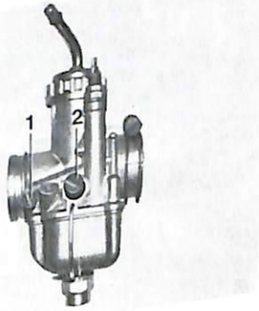

To synchronize the two carburetors, use 'Unitest' adjuster BMW No. 13 0 500 with the correct adapter caps.
Each time the throttle slide stop screw is moved, the idle air regulating screw must be reset as well. The carburetors are correctly synchronized when the needle on the tester is at zero. If the engine speed is then beyond the specified idle speed range of 800 – 1100 min⁻¹, turn throttle stop screws 2 on both sides to an equal extent either anti-clockwise or clockwise, to reduce or raise idle speed. Finally, reset mixture at idle air regulating screws 1.

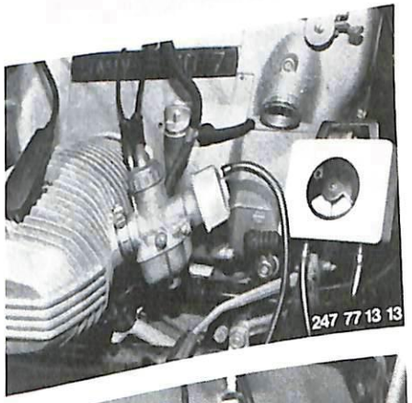

Constant-depression carburetor
Set the throttle cables to the basic position and adjust the cold-start (choke) cables so that when the choke is out of action the cold-start levers (arrow) are pressed down to their limit of travel.

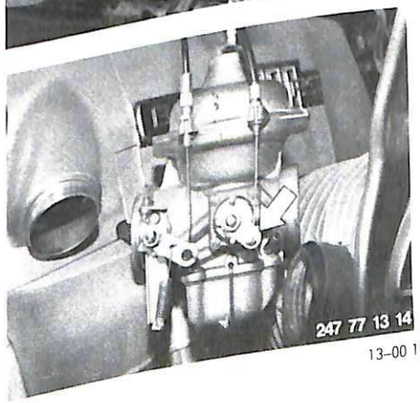

12.77 Alteration

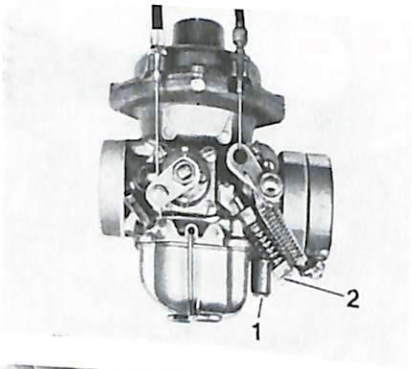

Set the idle mixture regulating screws 1 and throttle butterfly stop screws 2 on both carburetors to their basic positions.

This is done by screwing in the idle mixture regulating screw fully, then slackening off by a specific number of turns (see Technical Data). The throttle butterfly stop screw is tightened until it just touches the stop on the throttle butterfly lever, then slackened by one turn.

■

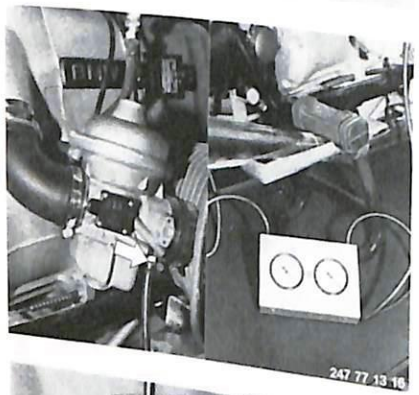

To synchronize the carburetors, use 'Duo-Test' unit, BMW No 13 0 700.

Remove the screw plug from the union for connecting the tester (arrow) and push on the rubber hose of the 'Duo-Test' unit.

Reset the throttle stop screws and idle mixture regulating screws on both sides of the engine alternately until the carburetors are synchronized.

If the engine idling speed is then beyond the specified range of 800 . 1100 min⁻¹, lower or raise it by turning both throttle butterfly stop screws clockwise or anti-clockwise by an equal amount.

Finally, reset the idle mixture regulating screws again.

■

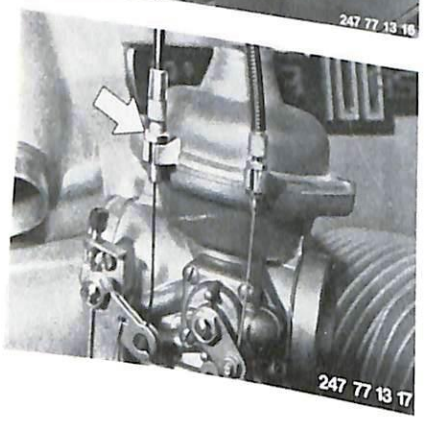

To adjust the throttle cables, raise engine speed slightly at the twistgrip and detach the two spark plug caps in turn to determine the speed at which each cylinder is operating. Adjust the throttle cables at the setscrew and lock with hex nut (arrow).

Warning: do not allow the engine to idle with the motorcycle at a standstill for more than 10 minutes.

■

13 10 004 Fuel level – checking and adjusting

Close the fuel tap and remove the float chamber from the carburettor.

Use the finger to push the float upwards and open the fuel tap – there should be no leakage of fuel. Let the float slowly return to its normal position – fuel should start to emerge when the base of the float is parallel with the lower edge of the carburettor housing, as illustrated.

If the fuel emerges too soon or too late, bend the tongue of the float as necessary.

■

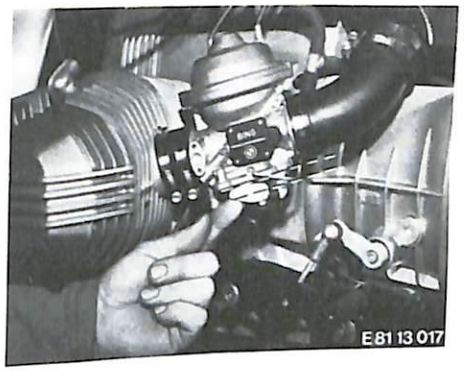

13 10 009 Carburettor – cleaning

Remove (install) left and right carburettors – 13 10 100.

Check and adjust fuel level – 13 10 004.

On **R 60/7 model,** take out the carburettor cover, throttle slide, idle jet, main jet, main jet carrier, accelerator pump, needle jet and atomizer. Wash these components in clean fuel and blow throught the jets and passages with compressed air.

■

Remove the dome cover, plunger with diaphragm, idle jet, main jet block, main jet, needle jet and atomizer. Wash all components in clean fuel and blow through jets and passages with compressed air.

■

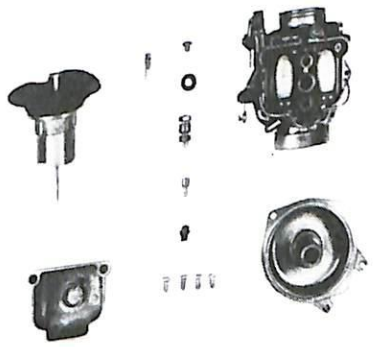

Note: on the carburettors for the R 60/7, the accelerator pump is in the main jet block (left picture). When the carburettor is in the idle position, the plunger (right picture) is pressed down by the jet needle.

During acceleration the plunger is released, pressed up by the spring under it and the volume of fuel above the plunger forced additionally through the needle jet into the inlet tract.

■

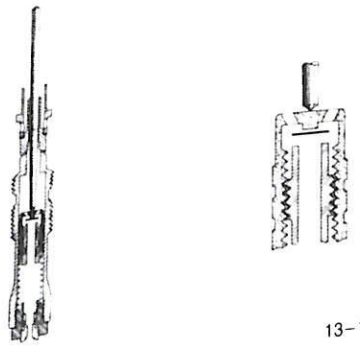

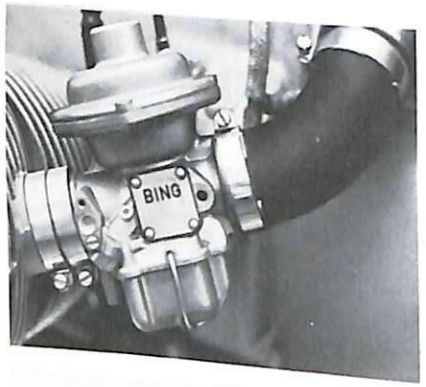

13 10 100 Left and right carburettors – removing and installing

On the R 60/7, unscrew the carburettor cover, pull the throttle slide out of the housing, release the choke fastening and pull it out with the choke slide.
On models with constant-depression carburettors, disconnect or detach the choke and throttle cables.

Loosen the hose clips or clamps and take off the carburettors.

■

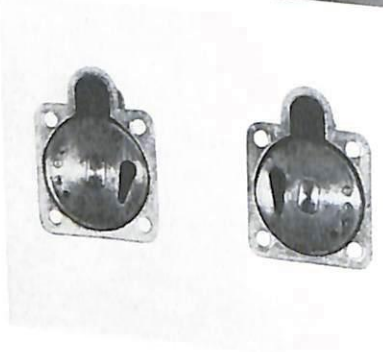

13 10 370 Cold-start (choke) housing – detaching and attaching

Remove (install) left and right carburettors – 13 10 100.

Loosen the 4 countersunk screws and take off the choke housing with rotary slide and gasket.

Make sure that the left and right choke housings are not accidentally confused.

Item 1 = left choke housing
Item 2 = right choke housing

■

13 23 080 Choke control lever – removing and installing (1981 models)

Press out the plastic cover with a small screwdriver. Unscrew and remove the retaining screw.

■

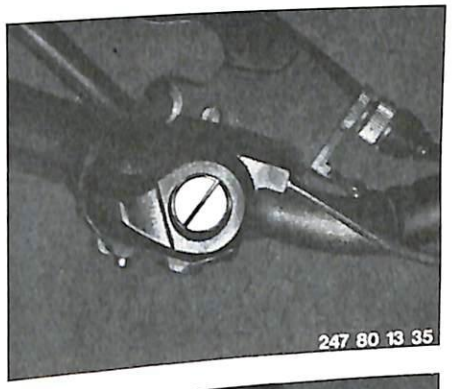

Take off the lever, guiding the cable through the slot in the housing.

When installing: the projections on the disc must locate in the slots on the housing (arrows).

■

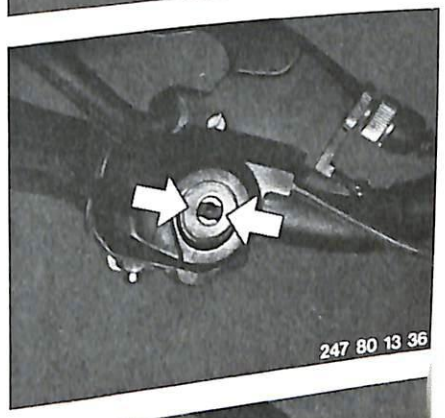

Disconnect the cable from the lever.

When installing: make sure that the detent plate (arrow) is correctly located.

■

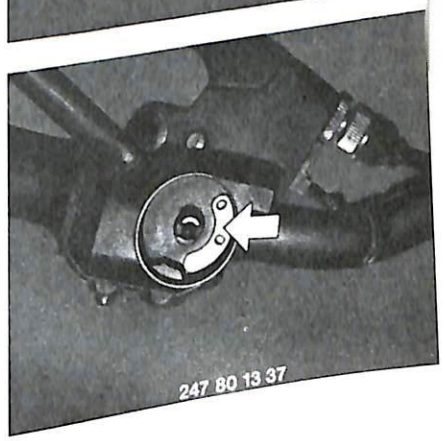

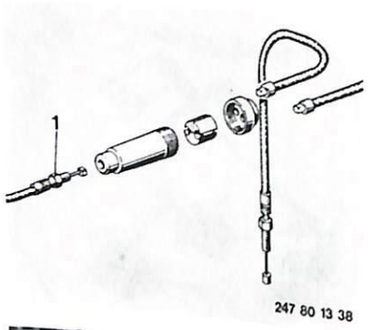

13 23 021 Choke cable – removing and installing (handlebar end)

Remove (install) choke control lever – 13 23 080.

Slacken the locknut (1) on the adjusting screw at the distribution block, and tighten the adjusting screw fully.

■

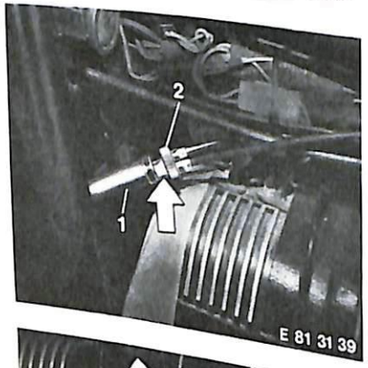

Turn the sleeve of the distribution block (1), holding the knurled section (2) at the same time.

Disconnect the cable from the distribution block (arrow).

When installing: adjust the cable so that the choke opens fully.

■

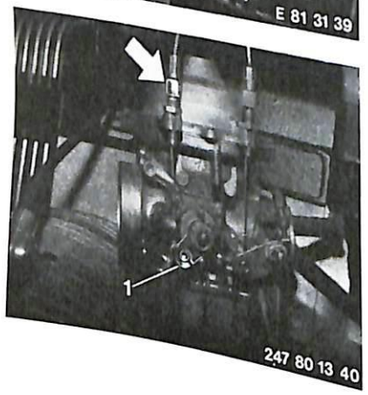

13 23 061 Choke cable – removing and installing (carburettor end)

Note: to make the illustration clearer, the carburettor has been detached from the cylinder head and turned round so that the opposite side is visible.

Loosen the locknut on the adjusting screw at the carburettor, and slacken off the screw (arrow) so that it emerges from the carburettor body.
Disconnect the cable from lever (1) on the choke assembly.

Disconnect the cable from the distributor block as described in 13 23 021.

■

13 72 000 Air filter element – removing and installing (single-sided breather)

Slacken the hose clip on the left air line and take off the air line after pushing back the rubber sleeve

■

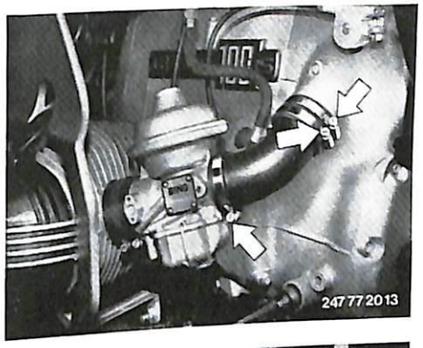

Remove the machine screw from the air filter chamber on the left and take off the chamber half shell

■

Take out the filter element

■

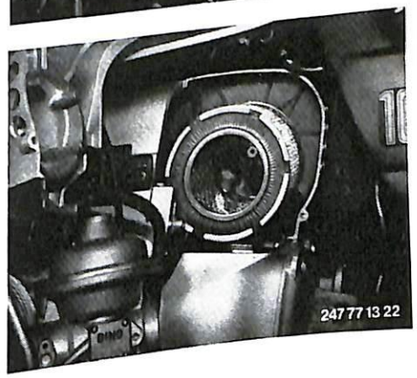

13 72 000 Air cleaner element – removing and installing (double-sided breather)

Remove (install) fuel tank 16 11 030

Remove the two Allen screws at left and right and take off the starter cover. Pull the engine breather hose out of the left half of the air cleaner housing

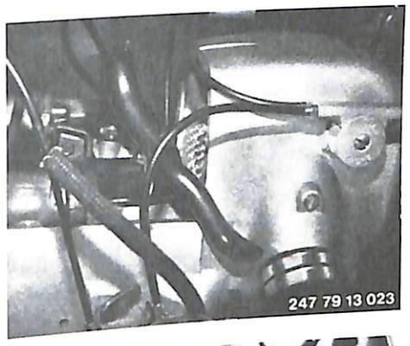

■

Slacken the hose clip screws for the left air hose, push back the the rubber sleeve and take off the air hose

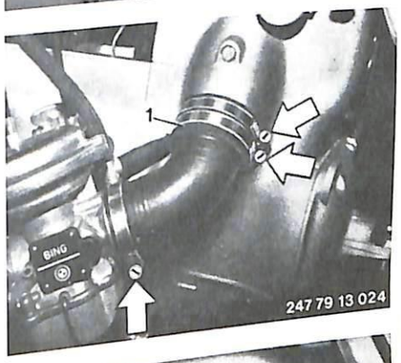

■

Remove the machine screw from the left of the air cleaner housing and pull off the housing shell

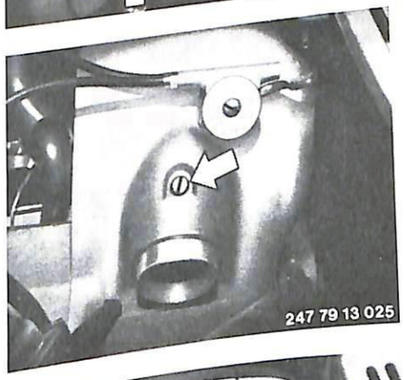

■

Pull out the air cleaner element

Note:

Push in the breather hose before installing the left housing shell

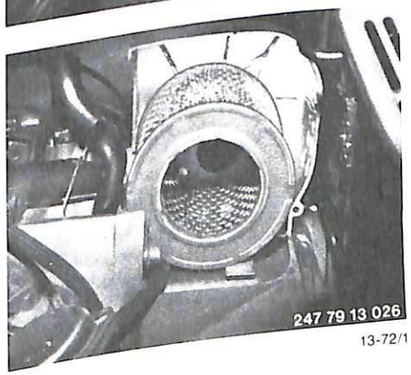

■

13 72 000 Air cleaner element – removing and installing (1981 models)

Using a screwdriver, lever off the retaining clips.

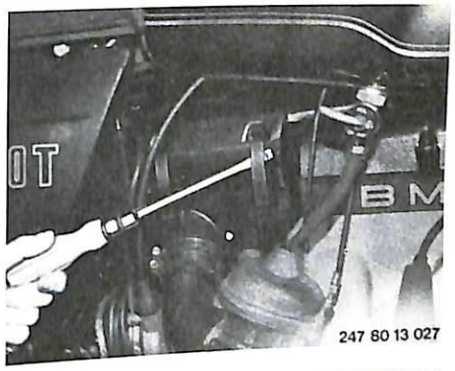

Pull out the plate-type filter element and slide in the new one. Secure the cover of the air cleaner housing with the clips, making sure that the element is properly located.

When installing: Note correct element position, with inscription at back and the arrow mark "TOP – OBEN" on top.

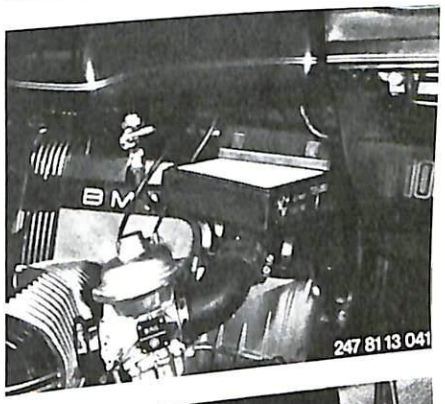

13 72 110 Intake venturi – removing and installing (1981 models)

Remove (install) the air cleaner – 13 72 000.

Loosen the hose clips at the air pipe and take off the pipe after pushing back the rubber sleeve.

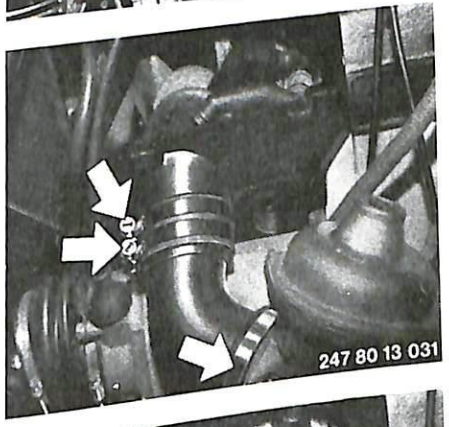

Force the stub pipe back from the inside with a screwdriver, then pull out the intake venturi.

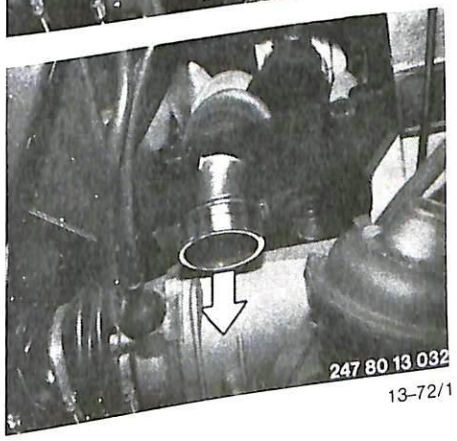

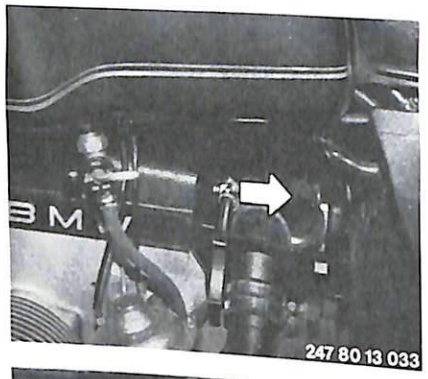

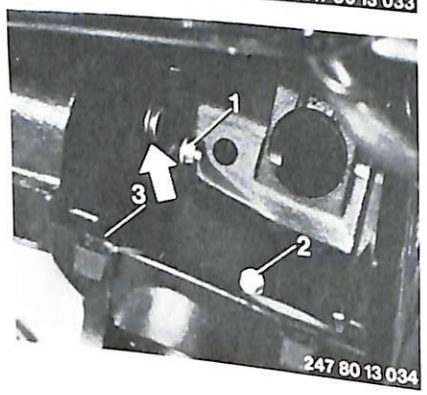

13 72 130 Air cleaner housing – removing and installing (1981 models)

Remove the air cleaner (13 72 000) and pull the housing out upwards.

Remove the battery (61 21 010)

Remove the battery carrier (61 21 100)

Pull the T-piece for the crankcase breather out of the air cleaner housing in the direction shown by the arrow.

■

Unscrew hex nut (1) and screws (2, 3) holding the housing. Press breather pipe (arrow) out of air cleaner housing.

Take off the housing.

■

16 Fuel tank and lines

Specifications ..... Page 16– 0/3
Specifications (1979 models) 16– 0/4
Specifications (1981 models) 16– 0/5
16 11 030 Fuel tank – removing and installing 16–11/1
16 12 190 Fuel tap – stripping down 16–12/1

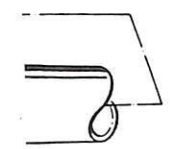

Technical Data

Model	R 60/7	R 75/7	R 80/7	R 100/7	R 100 S	R 100 RS
Tank capacity, l (Imp. gal.)	24 (5.3/6.3)					
Including reserve, l (Imp. gal.)	3 (0.6/0.8)					

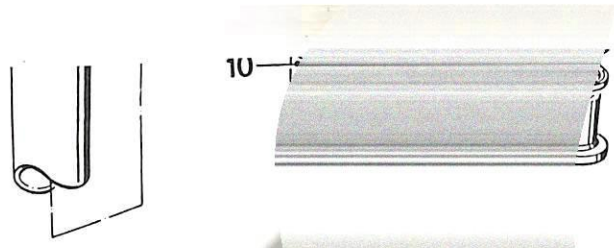

Fuel tank and lines

Specifications — '79 models

Model	*R 80/7*	*R 100 T*	*R 100 S*	*R 100 RT*	*R 100 RS*
Tank capacity, l (Imp. gal./US gal.)			*24 (5.3)*		
Including reserve, l (Imp. gal./US gal.)			*3 (0.6)*		

Fuel tank and lines

Specifications (1981 models)

Model		R 100	R 100 CS	R 100 RT	R 100 RS
Tank capacity	liters (imp., US gal)		24 (5.3,6.3)		
incl. reserve of	liters (Imp., US gal)		3 (0.6,0.8)		

Fuel tap

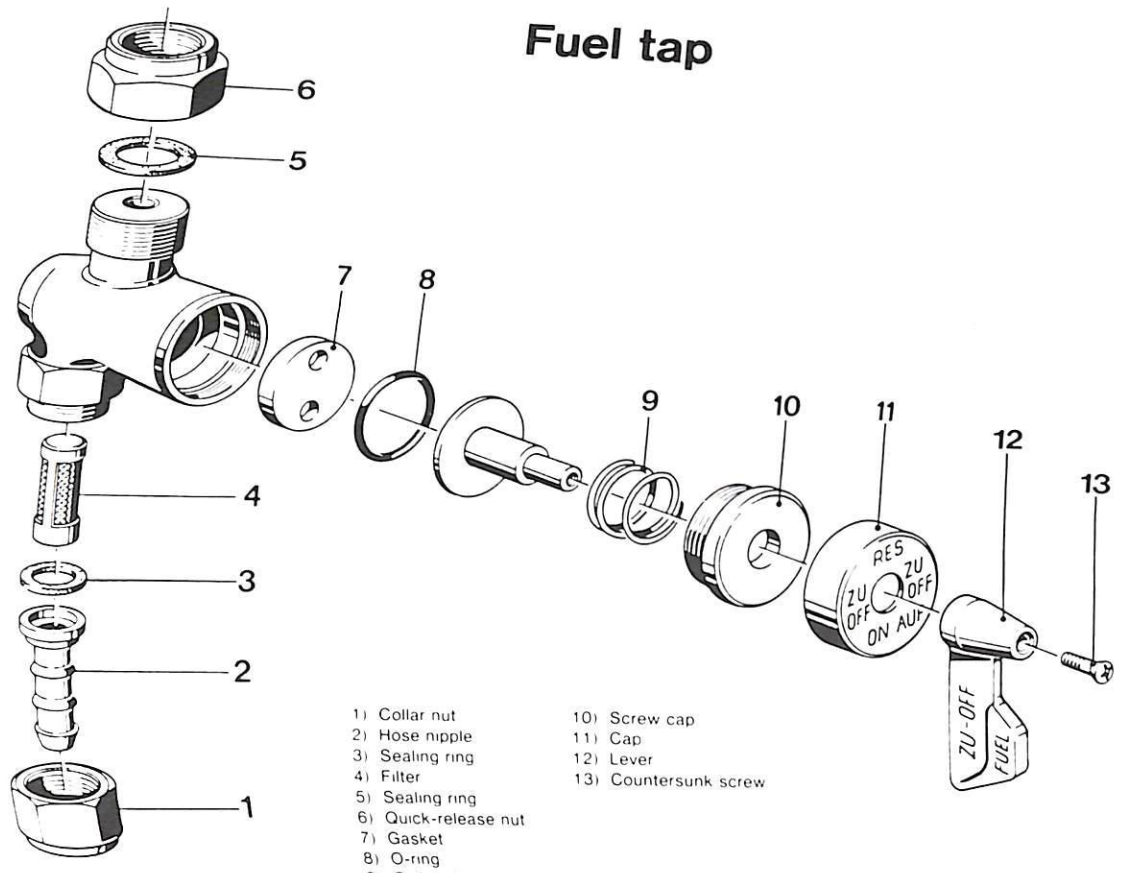

1) Collar nut
2) Hose nipple
3) Sealing ring
4) Filter
5) Sealing ring
6) Quick-release nut
7) Gasket
8) O-ring
9) Coil spring
10) Screw cap
11) Cap
12) Lever
13) Countersunk screw

3.82 Aldinger

3.82 Aldinger

Fuel tap

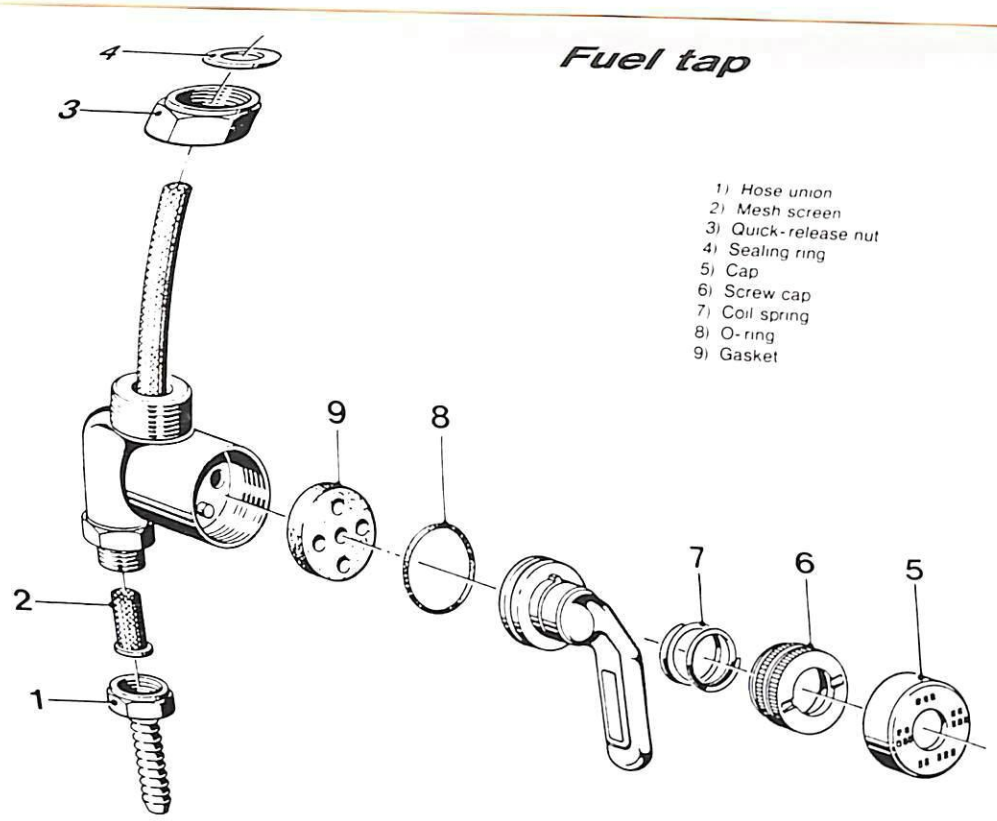

1) *Hose union*
2) *Mesh screen*
3) *Quick-release nut*
4) *Sealing ring*
5) Cap
6) Screw cap
7) Coil spring
8) O-ring
9) Gasket

16 11 030 Fuel Tank – Removing and Refitting

Close fuel taps (1) and take off hoses (2).

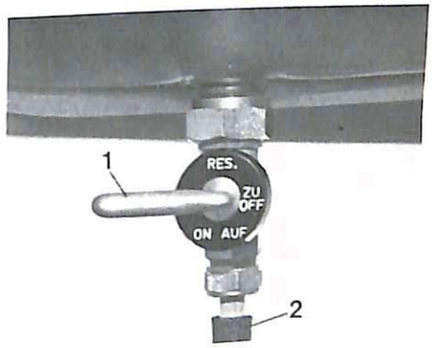

Lift the twin seat, unscrew the knurled knobs, raise the fuel tank slightly to the rear, lift at front and remove.

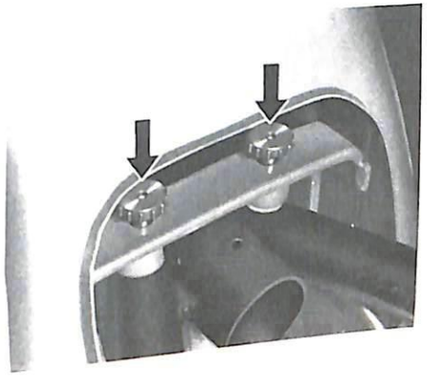

16 12 190 Fuel tap – stripping

Pull off the fuel hose turning slightly at the same time.
Detach the fuel tap from the fuel tank.

Unscrew the collar nut (1) and pull out the hose connection (2) with mesh strainer (3).
Take off cap (4). Unscrew threaded cap (5) and take off spring (6), slotted discs (7 and 8) and actuating lever (9).
Check cord ring seal (10) for damage and note gasket (11).

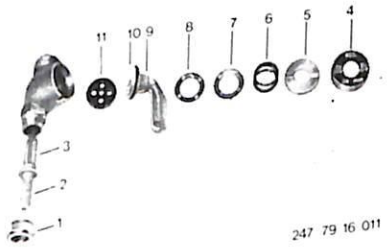

18 Exhaust system

Specifications ..... Page 18– 0/3
Specifications (1979 models) 18– 0/4
Specifications (1981 models) 18– 0/5
18 00 020 Exhaust system – detaching and attaching 18–00/1
18 00 020 Exhaust system – detaching and attaching (1981 models) 18–00/1
18 11 321 Muffler (silencer) – renewing 18–00/2

31–0/9

Exhaust system

Technical Data

Model	R 60 7	R 75 7	R 80 7	R 100 7	R 100 S	R 100 RS
Silencer diameter, mm(in)	87 (3.43)					
Exhaust pipe diameter, mm(in)	38 × 1.5 (1.50 × 0.06)					40 × 1.5 (1.57 × 0.06)

Tightening torques Nm (ft. lb)

Star nut for exhaust	160 ± 20 (118 ± 15)

All remaining bolts, screws and nuts are to be tightened in accordance with the normal values specified in the manufacturer's tables or in accordance with the latest BMW Standard Specification 60002.0.

Exhaust system

Specifications — '79 models

Model	R 80/7	R 100 T	R 100 S	R 100 RT	R 100 RS
Silencer diameter, mm (in)	87 (3.425)				
Exhaust pipe diameter, mm (in)	38 × 1.5 (1.496 × 0.06)	40 × 1.5 (1.57 × 0.06)			

Tightening torques Nm (ft. lb)

Star nut for exhaust 160 ± 20 (118 ± 15)

All remaining bolts, screws and nuts are to be tightened in accordance with the values specified in the manufacturer s tables or in accordance with the latest BMW Standard Spezification 60002 0

Exhaust system

Specifications (1981 models)

Model	R 100	R 100 CS	R 100 RT	R 100 RS
Exhaust pipe dia. mm (in)	38 x 1.5 (1.50 x 0.06)			

Tightening torques Nm (lb. ft)

Spider nut for exhaust pipe 200 + 20 (147 + 15)

All other bolts and nuts are to be tightened to the customary values as shown in the manufacturers' tables or the latest BMW 60002.0 standards sheet.

18 00 020 Exhaust System – Removing and Refitting

Use the special BMW 18 0 600 exhaust spanner to detach detach the exhaust nut from each cylinder head.

■

Unscrew the hexagonal nuts on the footrests and unscrew the hexagonal socket head bolts from the frame (arrow)

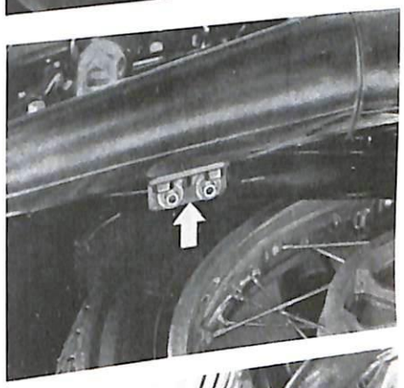

■

Slacken the hexagonal socket head bolts on the cross pipe and remove exhaust system

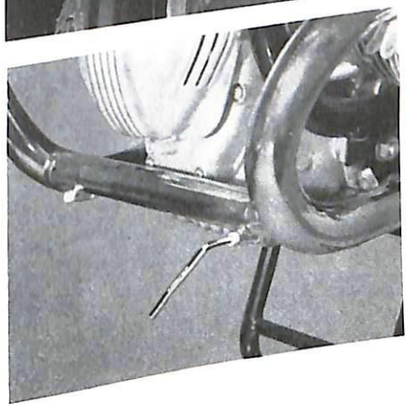

■

18 00 020 Exhaust system – removing and installing (1981 models)

Remove muffler (silencer) – 18 11 321.

Unscrew the exhaust port nuts at the cylinder heads with special wrench BMW No. 18 0 600.

■

Slacken the Allen screws at the front balancing pipe (arrows).

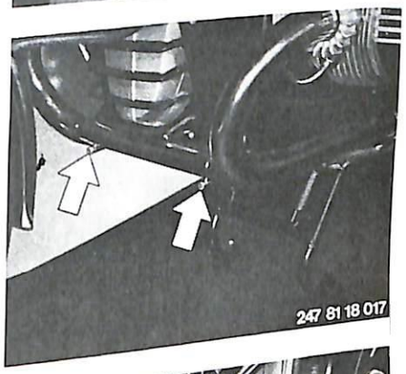

■

Unscrew the hex bolt at the rear engine mounting pin and take off the clip (arrow).
Loosen the clamp bolts (1) at the rear balancing pipe. Pull the exhaust pipes out of the cylinder heads and take off the complete exhaust system.

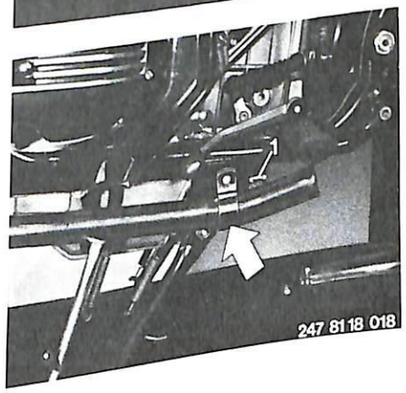

■

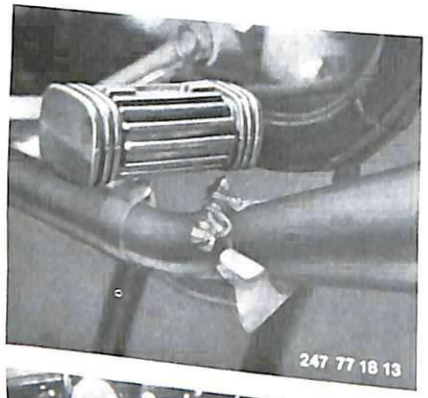

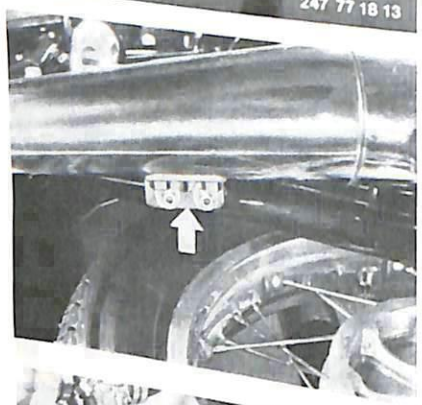

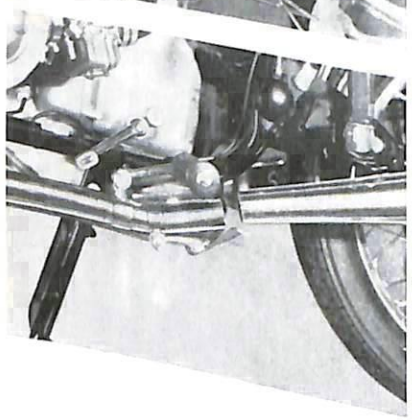

18 11 321 Silencer – Renewing

Slacken the hexagonal bolt on the pipe clamp and push back the pipe clamp.

■

Unscrew the hexagonal socket head bolts on the frame (arrow).

■

Pull off the silencer to the rear.

■

21 Clutch

Page

Specifications 21– 0/3
Specifications (1979 models) 21– 0/4
Specifications (1981 models) 21– 0/5
21 00 004 Clutch operating clearance – adjusting (1981 models) 21–00/1
21 21 000 Clutch – removing and installing 21–21/1
21 21 000 Clutch – removing and installing (1981 models) 21–21/1
21 51 020 Clutch withdrawal arm – removing and installing 21–51/1
21 51 020 Clutch withdrawal arm – removing and installing (1981 models) 21–51/1
Troubleshooting – clutch (1981 models) 21–51/3

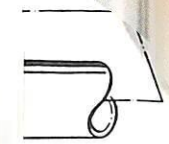

Technical Data

Model	R 60/7	R 75/7	R 80/7	R 100/7	R 100 S	R 100 RS
Type	Single plate dry type clutch with diaphragm spring					
Material thickness (diaphragm spring) mm(in)	2.6 (0.102)			2.8 (0.110)		
Diaphragm spring pressure when fitted, kp	180...220 (397...485)			202...220 (445...485)		
Height of diaphragm spring (relaxed) mm(in)	19.0±0.5 (0.748±0.020)			17.4±0.3 (0.685±0.012)		
Diaphragm spring dia. (pressed flat) mm(in)	183 (7.205)					
Test specification for diaphragm spring	When the edge of the disc is laid on the gauge plate the height differences in the spring tabs should be a maximum of 0.3 mm (0.011") or when the spring tabs are laid on the gauge plate the height deflection of the disc rim should be a maximum of 0.8 mm (0.031")					
Overall thickness of clutch plate mm(in) (segment and lining)	6±0.25 (0.236±0.010)					
Minimum thickness of clutch plate, mm(in)	4.5 (0.177)					
Clutch plate external diameter, mm(in)	180 (7.087)					
Maximum lateral runout of clutch plate at outer diameter, mm(in)	0.15 (0.006)					
Maximum vertical play of clutch plate, mm(in)	0.3 (0.012)					
Maximum deflection of diaphragm driver plate, mm(in)	0.1 (0.004)					
Maximum imbalance of clutch plate, cmg	6					
Clutch travel at throwout lever (cable), mm(in)	2 (0.079)					

Tightening torques Nm (ft. lb)

Clutch lever adjusting screw locknut	20...23 (14.7...17.0)
Clutch at flywheel	23 (17.0)

All other screws, bolts and nuts are to be tightened in accordance with the normal values indicated in the manufacturer's tables or in the latest BMW Standard Specification 60002.0.

Clutch operating mechanism

(up to 1981 models)

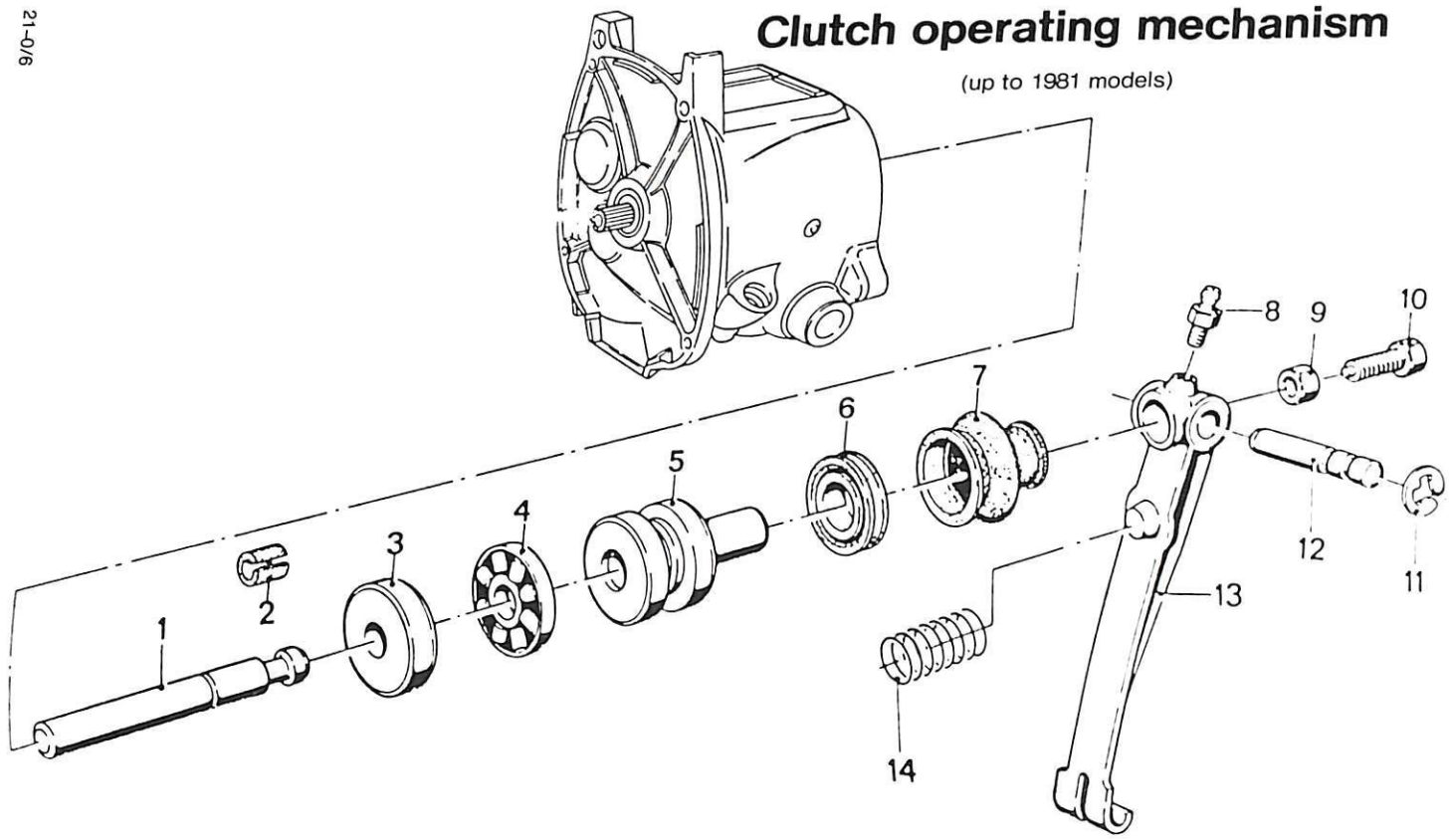

1) Pushrod
2) Felt ring
3) Thrust washer
4) Ball cage with balls
5) Piston
6) Sealing ring
7) Sealing sleeve
8) Grease nipple
9) Hex nut
10) Hex bolt
11) Circlip
12) Pivot pin
13) Clutch lever
14) Coil spring

Clutch operating mechanism (from 1981 models on)

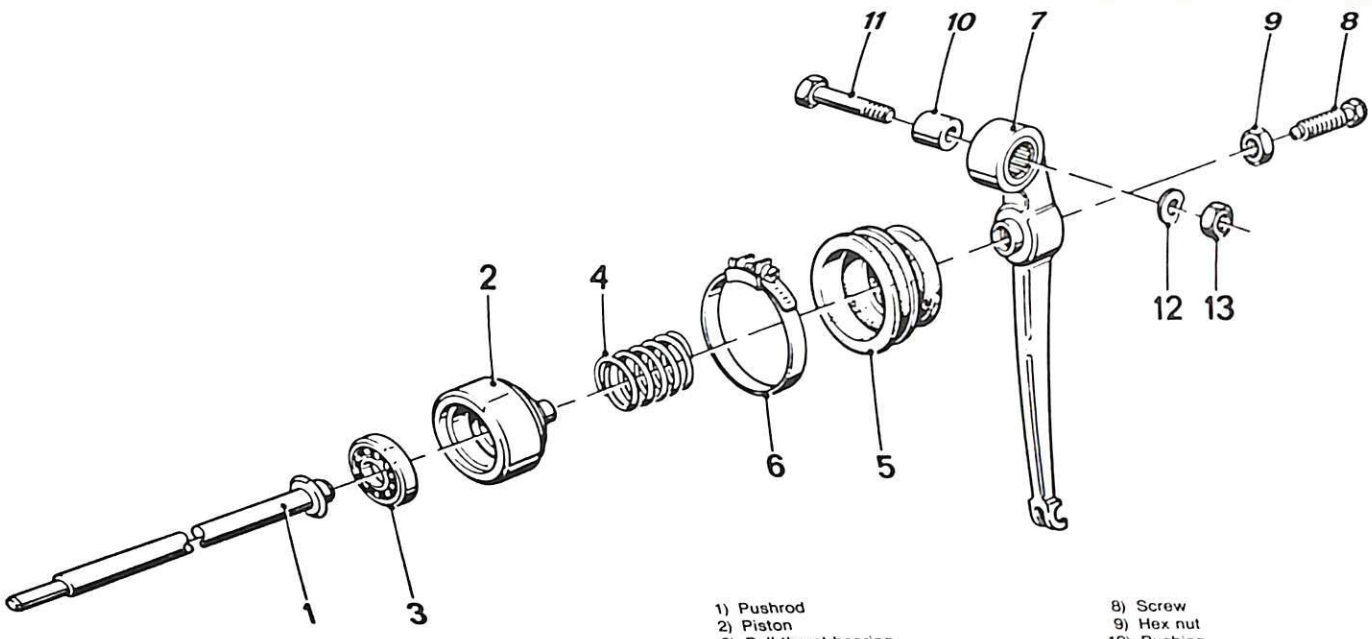

1) Pushrod
2) Piston
3) Ball thrust bearing
4) Spring
5) Sleeve
6) Clip
7) Clutch lever
8) Screw
9) Hex nut
10) Bushing
11) Hex bolt
12) Spring washer
13) Hex nut

Clutch (up to 1981 models)

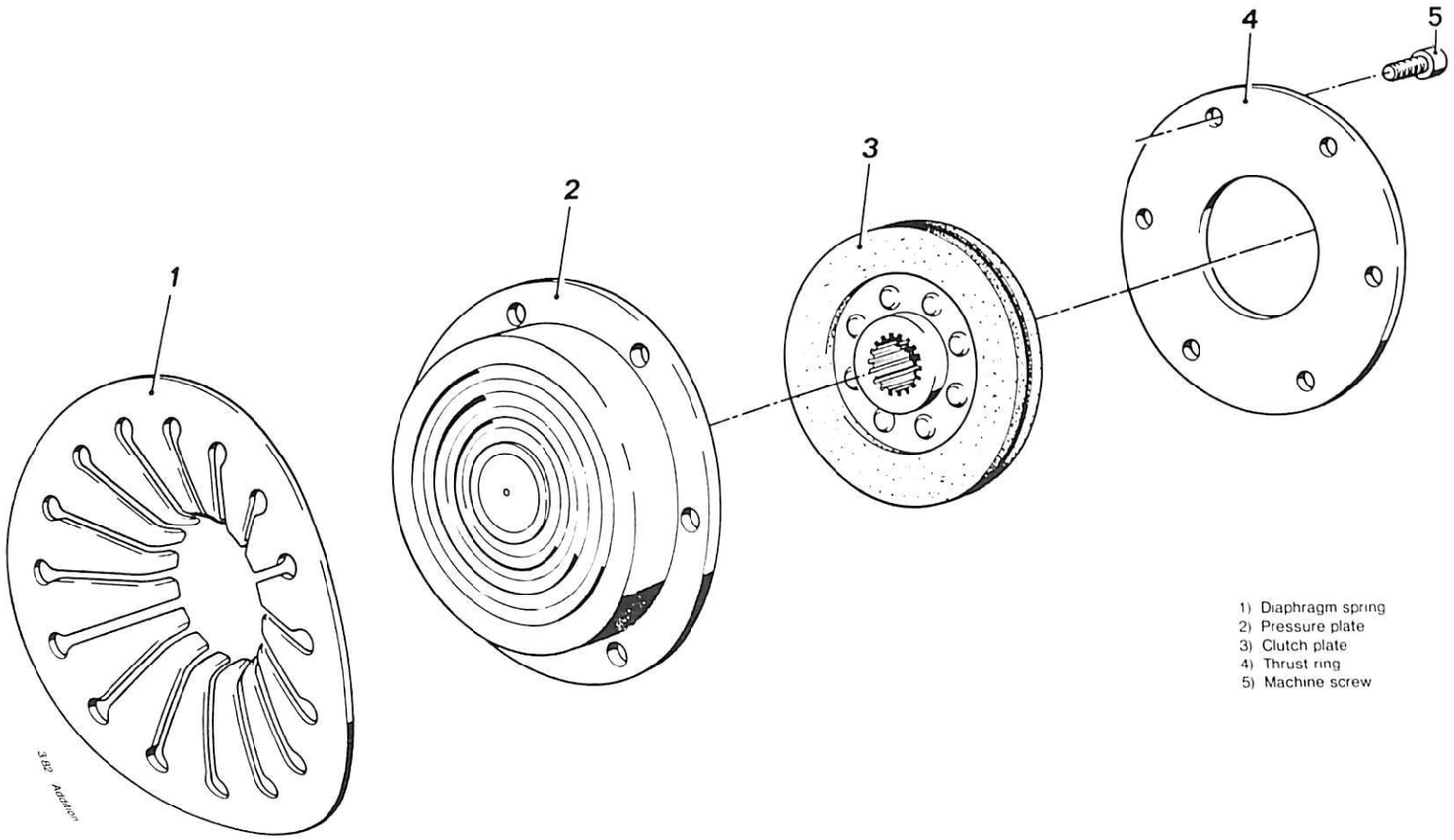

1) Diaphragm spring
2) Pressure plate
3) Clutch plate
4) Thrust ring
5) Machine screw

Clutch (from 1981 models on)

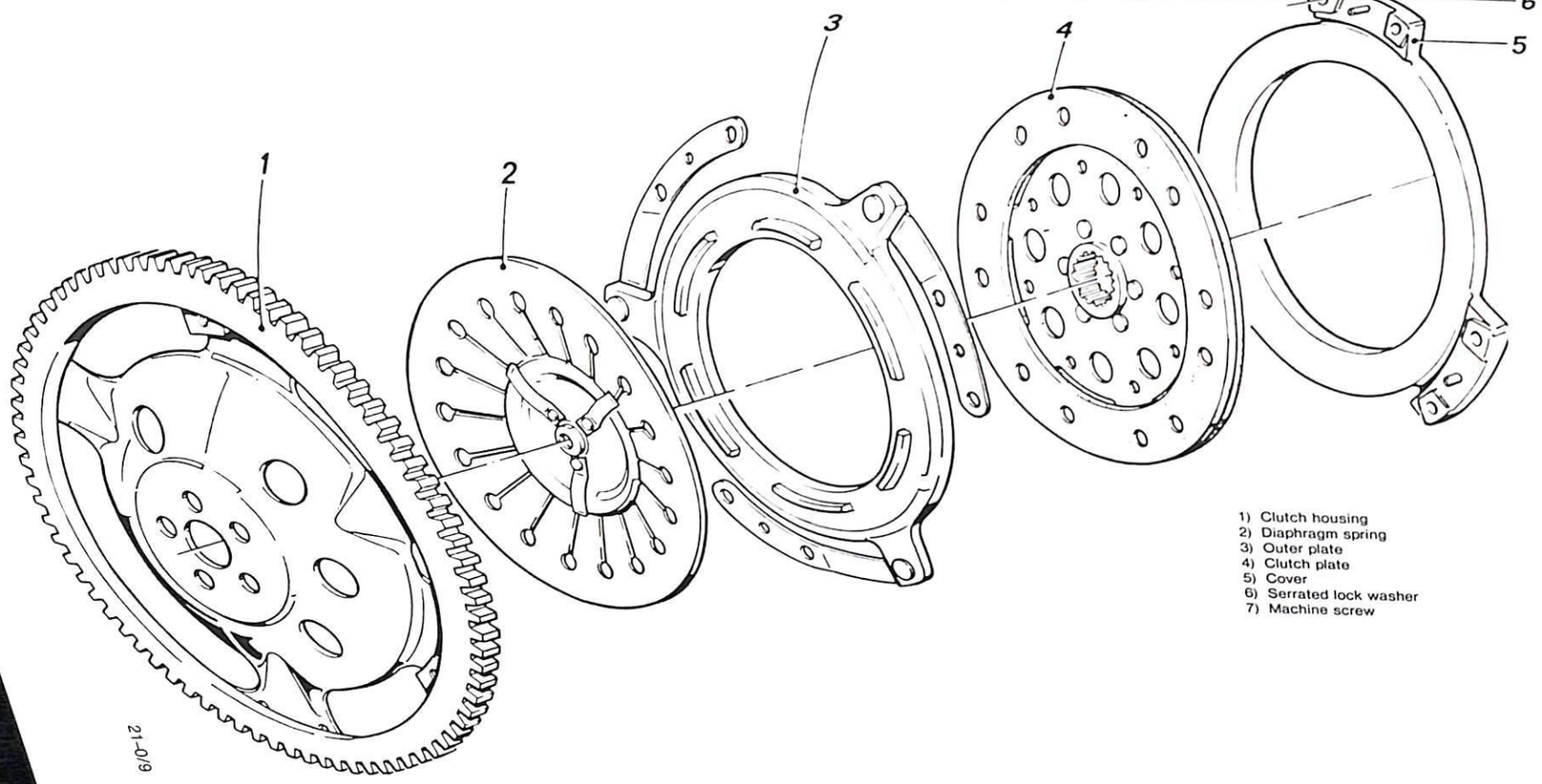

1) Clutch housing
2) Diaphragm spring
3) Outer plate
4) Clutch plate
5) Cover
6) Serrated lock washer
7) Machine screw

21 00 004 Clutch operating clearance – adjusting (1981 models)

Free travel at the clutch lever on the handlebar must be 2 + 0.5 mm (0.08 ± 0.02 in) adjust if necessary as follows:

- Unscrew locknut (1) on wire cable adjusting screw
- Turn adjusting screw (2)

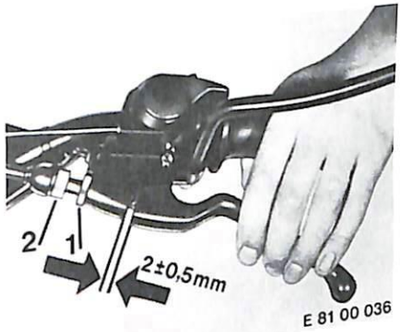

- Dimension "C" at the clutch lever on the gearbox must be 201 + 2 mm (7.91 + 0.08 in). The lever should be at an angle of 4° to the rear. Retighten locknut (1).
- Unscrew locknut "A" on the gearbox-end adjusting screw.
- Turn adjusting screw "B" until clutch lever free travel at the handlebar is 2 + 0.5 mm (0.08 + 0.02 in), then tighten locknut "A" again.

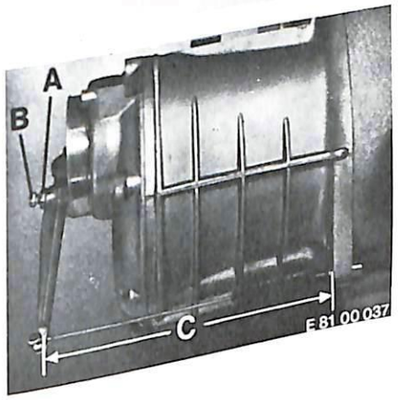

21 21 000 Clutch – removing and refitting

First possibility: Engine removed (11 00 050)
Second possibility: Gearbox removed (23 00 020) Engine remains in frame

Illustrations and text prepared after this preliminary work.
Use an Allen key to slacken six hexagonal socket head bolts, unscrew alternate fastening bolts, replace by three clamping bolts and screw down their nuts to contact the thrust ring.

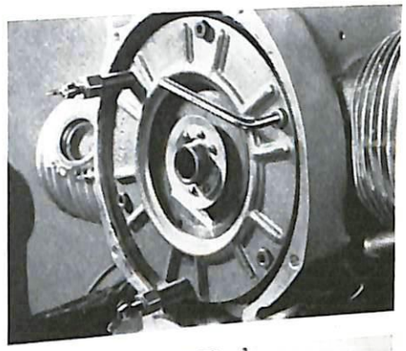

Remove the remaining three fastening bolts and turn back the clamping bolt nuts uniformly until the spring disc is fully relaxed.

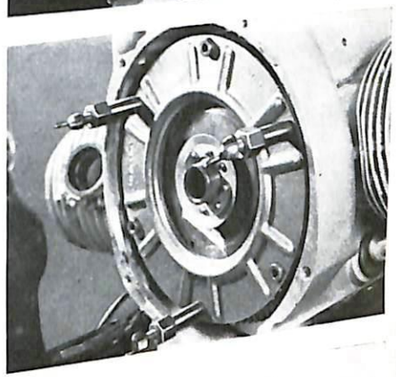

Remove the thrust ring, clutch plate, diaphragm and diaphragm spring.

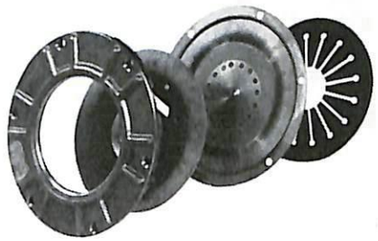

Checking and repair

Check the clutch plate for wear, the diaphragm for distortion and the spring for clamping force when fitted. Check the driven plate for lateral runout, wear tolerances and play; see Technical Data section.

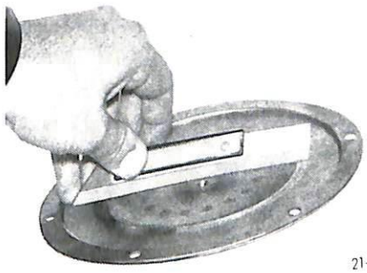

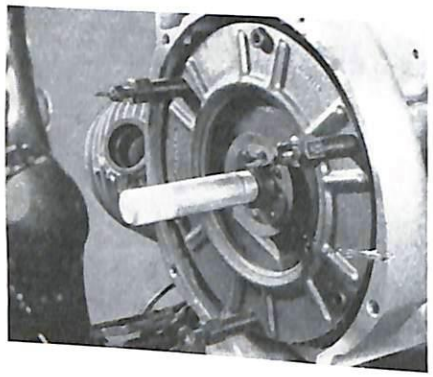

When re-assembling use the BMW 21 2 650 centering arbor to locate the clutch plate. See Technical Data for tightening torques.

Lightly coat inside splines of the clutch hub with "Molykote Longterm 2" lubricant.

■

21 21 000 Clutch – removing and installing (1981 models)

Remove (install) gearbox 23 00 020

The engine does not have to be removed.

Unscrew the six retaining bolts at the housing cover.

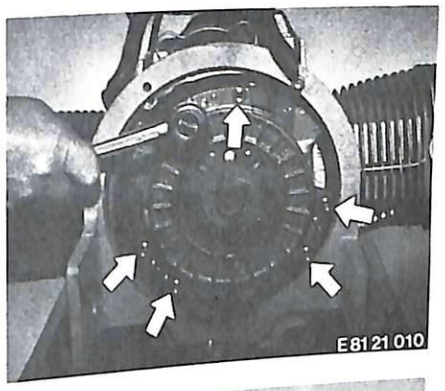

■

Take off the cover (1), clutch plate (2), outer plate (3) and diaphragm spring (4).

Note: when assembling, make sure that the colour marks for balancing are offset by 120° (at least 180°).

Grease with Molykote "U" inside splines of the clutch!

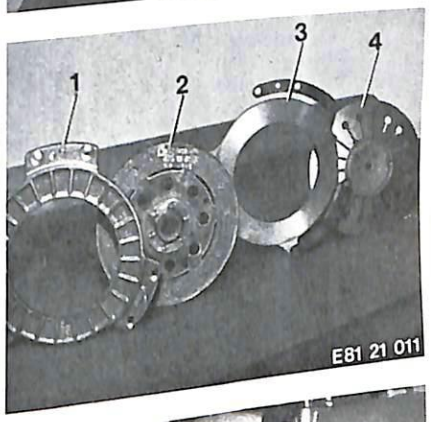

■

When installing, center the clutch plate with centering pin BMW No. 21 2 660

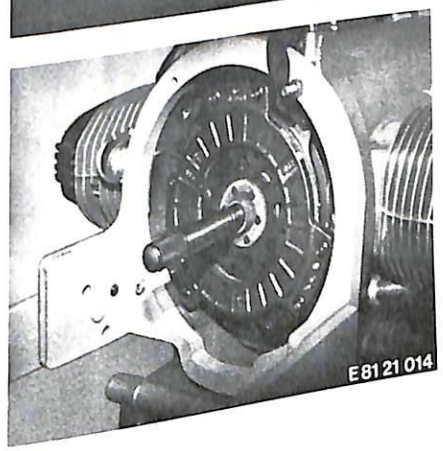

■

21 51 020 Clutch Throwout Lever – Removing and Refitting

Disconnect the clutch cable (1)

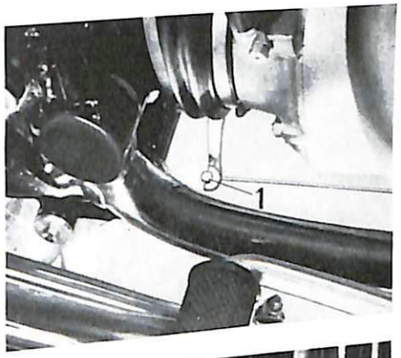

Extract cotter (2), take out pin (3) and lay the parts with thrust spring (4) to one side

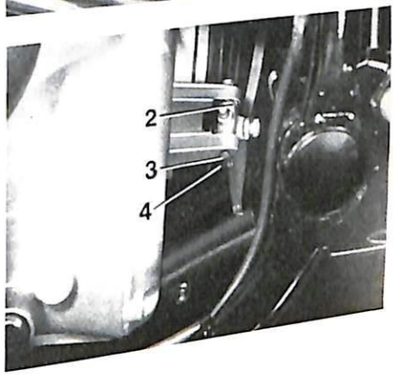

21 51 020 Clutch withdrawal arm – removing and installing (1981 models)

Disconnect the clutch cable from the withdrawal arm

Slacken the retaining nut (arrow) on the bearing mount, pull out the pin and take off the withdrawal arm

Adjust operating clearance – 21 00 004

Note: grease with Molykote "U" thrustbearings of the withdrawal arm!

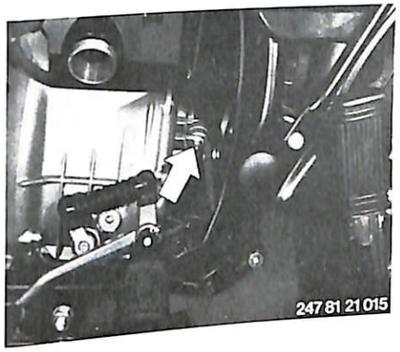

Troubleshooting – clutch

Fault	Cause	Remedy
Clutch judder	Input shaft incorrectly shimmed	Re-shim input shaft (see Pages 23–21/5 and 6)
Clutch is stiff to operate. clutch judder	Lack of grease on clutch plate/crankshaft splines	Clean and grease the splines

23 Gearbox

	Specifications	Page 23- 0/3
	Specifications (1979 models)	23- 0/5
	Specifications (1981 models)	23- 0/7
23 00 020	Gearbox - removing and installing	23-00/1
23 00 020	Gearbox - removing and installing (1981 models)	23-00/1
23 11 040	Gearbox cover - detaching and attaching/sealing	23-12/1
23 22 001	Complete gear cluster - renewing	23-21/1
23 31 001	Selector forks - renewing	23-31/1
23 31 210	Bearing mount for selector discs - removing and installing	23-31/1
23 31 861	Selector discs - renewing	23-31/2
23 31 881	Shift mechanism - renewing	23-31/2
23 31 401	Electric neutral indicator - renewing	23-31/3
23 51 010	Kick starter - removing and installing	23-31/4
	Troubleshooting - gearbox	23-31/5

Technical Data

Model	R 60 7	R 75 7	R 80 7	R 100 7	R 100 S	R 100 RS
Gearbox:	5-speed gearbox with dog clutch gear selection integral with engine, driving torque damped in all gears					
Gear shift system	Hooked lever shift					
Transmission ratios						
1st gear	4.4 : 1			Competition ratio: 3.38 : 1		
2nd gear	2.86 : 1			2.43 : 1		
3rd gear	2.07 : 1			1.93 : 1		
4th gear	1.67 : 1			1.67 : 1		
5th gear	1.50 : 1			1.50 : 1		
Type of oil above 5° C (41° F)	Brand-name hypoid gear oil SAE 90					
Type of oil below 5° C (41° F)	Brand-name hypoid gear oil SAE 80					
Filling capacity, litres (Imp. pints)	0.8 (1.4/0.85)					
Drive shaft: Axial float, mm(in)	0 . . . 0.1 (0 . . . 0.0039) (adjust with shims)					
Layshaft: Axial float, mm(in)	0 . . . 0.1 (0 . . . 0.0039) (adjust with shims)					
Output shaft: Axial float, mm(in)	0 . . . 0.1 (0 . . . 0.0039) (adjust with shims)					
Ball bearing seating in gearbox	Press fit (heat gearbox case to about 100° C (212° F) for assembly)					
Axial play of the free-running pinions in the shaft mm(in)	0.15 . . . 0.30 (0.006 . . . 0.012)					

Gearbox

Technical Data

Model	R 60/7	R 75/7	R 80/7	R 100/7	R 100 S	R 100 RS
Bushes on output shaft mm(in)	0.005...0.035 (0.00019...0.00138)					
Driving flange radial play, mm(in) Face runout, mm(in)	±0.05 (±0.0020) ±0.05 (±0.0020)					
Power transmission from gearbox to rear wheel	Enclosed universal-joint shaft in right-hand swing arm tube, universal joint at gearbox end. Curved spline coupling bell at axle drive end					
Axial float of foot-operated gear shift lever shaft, mm(in)	0.1 (0.0039)					
Overshift clearance between ratchet and selector points on the cam selector plate 1st to 5th gear, mm(in)	approx. 0.5 (0.02)					

Tightening torques Nm (lb. ft)

Mounting on engine	20...24	(14.7...17.7)	Gearbox case gearbox cover	7...8	(5.2...5.9)
driver flange on gearbox output shaft	200...220	(147...162)	Kick starter lever nut	20...23	(14.7...17.0)
			Oil filler plug	28...31	(21...22.9)
			Oil drain plug	23...26	(14.7...19.2)

All other bolts, screws and nuts are to be teghtened with the values recommended in the manufacturer's tables or the latest BMW Standard Specification 60002.0.

12 77 Alternator

Unterschriftenblatt

Gearbox

Specifications – '79 models

Model	R 80/7	R 100 T	R 100 S	R 100 RT	R 100 RS
Gearbox:	5-speed gearbox with dog clutch gear selection integral with engine. driving torque damped in all gears				
Gear shift system	Hooked lever shift				
Transmission ratios				Competition ratios	
1st gear	4.4 1			3.38 1	
2nd gear	2.86 1			2.43 1	
3rd gear	2.07 1			1.93 1	
4th gear	1.67 1			1.67 1	
5th gear	1.50 1			1.50 1	
Type of oil above 5°C (41°F) below 5°C (41°F)	Brand-name hypoid gear oil SAE 90 Brand-name hypoid gear oil SAE 80				
Filling capacity, litres (Imp. pints/US quarts)	0.8 (1.4/0.85)				
Drive shaft: Axial float, mm (in)	0...0.1 (0...0.0039) (adjust with shims)				
Layshaft: Axial float, mm (in)	0...0.1 (0...0.0039) (adjust with shims)				
Output shaft: Axial float, mm (in)	0...0.1 (0...0.0039) (adjust with shims)				
Ball bearing seating in gearbox	Press fit (heat gearbox case to about 100°C [212°F] for assembly)				
Axial play of the free-running pinions in the shaft mm (in)	0.15...0.30 (0.006...0.018)				

Gearbox

Specifications – '79 models

Model	R 80/7	R 100 T	R 100 S	R 100 RT	R 100 RS
Bushes on output shaft mm (in)	0.005 . . . 0.035 (0.00019 . . . 0.0013)				
Driving flange radial play, mm (in) Face runout, mm (in)	±0.05 (±0.0019) ±0.05 (±0.0019)				
Power transmission from gearbox to rear wheel	Fully-enclosed drive shaft with torsional vibration damper in right swinging arm tube; universal joint at gearbox end, coupling with curved splines at final drive end.				
Axial float of foot-operated gear shift lever shaft, mm (in)	0.1 (0.0039)				
Obershift clearance between ratchet and selector points on the cam selector plate 1st to 5th gear, mm (in)	approx. 0.5 (0.019)				

Tightening torques Nm (lb. ft)

Mounting on engine	20...24 (14.7...17.7)	Gearbox case/gearbox cover	7...8 (5.2...5.9)
driver flange on gearbox output shaft	200...220 (147...162)	Kick starter lever nut	20...23 (14.7...17.0)
		Oil filler plug	28...31 (21...22.9)
		Oil drain plug	23...26 (14.7...19.2)

All other bolts, screws and nuts are to be teghtened with the values recommended in thee manufacturer's tables or the latest BMW Standard Specification 60002.0.

Gearbox

Specifications (1981 models)

Model	R 100	R 100 CS	R 100 RT	R 100 RS
Gearbox:	5-speed, in unit with engine block, drive torque damped in all gears, claw-action shift			
Gear shift	Hook claw mechanism			
Gear ratios				
1st	4.4		Sports gearbox	
2nd	2.86		3.38	
3rd	2.07		2.43	
4th	1.67		1.93	
5th	1.50		1.67	
			1.50	
Oil grade above 5° C (41° F)	Brand-name hypoid gear oil, SAE 90			
below 5° C (41° F)	Brand-name hypoid gear oil, SAE 80		API class GL 5	
Oil content liters (Imp. pints, US quarts)	0.8 (1.4, 0.85)			
Input shaft endplay mm (in)	0 . . . 0.1 (0 . . . 0.004) – adjust with shims			
Countershaft endplay mm (in)	0 . . . 0.1 (0 . . . 0.004) – adjust with shims			
Output shaft endplay mm (in)	0 . . . 0.1 (0 . . . 0.004) – adjust with shims			
Ball bearing seats in housing	press fit (heat housing to app. 100° C [212° F])			
Endplay of free gears on shaft mm (in)	0.15 . . . 0.30 (0.006 . . . 0.012)			

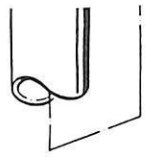

Gearbox

Specifications (1981 models)

Model	R 100	R 100 CS	R 100 RT	R 100 RS
Bushings on output shaft mm (in)	0.005 ... 0.035 (0.0002 ... 0.0014)			
Drive flange radial runout mm (in)	± 0.05 (0.002)			
Face runout mm (in	± 0.05 (0.002)			
Transmission from gearbox to rear wheel	Propeller shaft with torsional vibration damper enclosed in right swinging arm tube, universal joint at gearbox and domed coupling with curved splines at rear wheel end			
Enplay at gear shift pedal shaft mm (in)	0.1 (0.004)			

Tightening torques Nm (lb. ft)

Attachment to engine	33 (24)	Gearbox housing/cover	8 (5.9)
Drive flange at gearbox output shaft	221.5 (163)	Kick starter pedal nut	22.5 (16.5)
Bearing mount	19 (14)	Oil filler plug	31 (23)
		Oil drain plug	26 (19)

All other bolts and nuts are to be tightened to the customary values as shown in the manufacturers tables or the latest BMW 60002 0 standards sheet

Gear shift mechanism

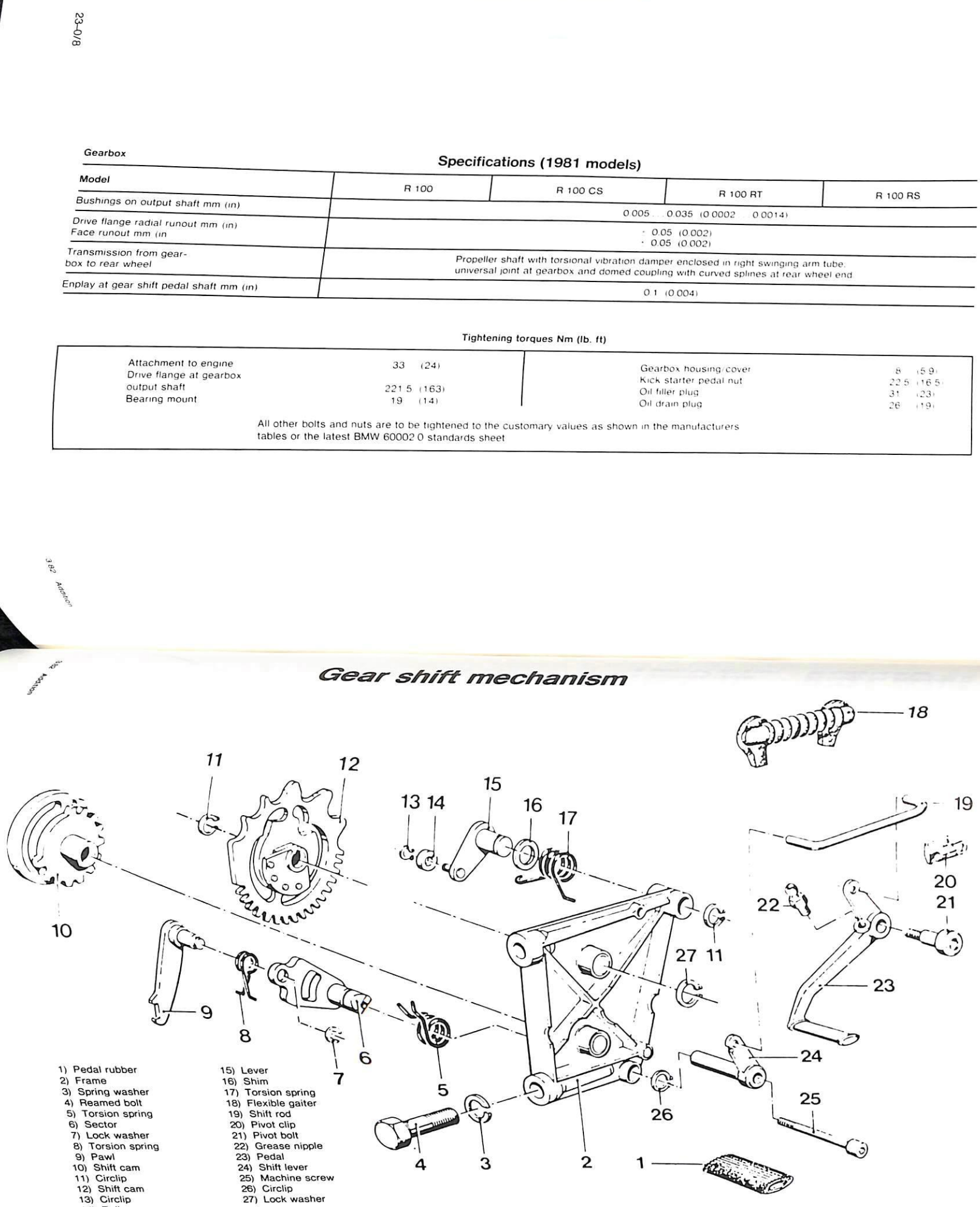

1) Pedal rubber
2) Frame
3) Spring washer
4) Reamed bolt
5) Torsion spring
6) Sector
7) Lock washer
8) Torsion spring
9) Pawl
10) Shift cam
11) Circlip
12) Shift cam
13) Circlip
14) Roller
15) Lever
16) Shim
17) Torsion spring
18) Flexible gaiter
19) Shift rod
20) Pivot clip
21) Pivot bolt
22) Grease nipple
23) Pedal
24) Shift lever
25) Machine screw
26) Circlip
27) Lock washer

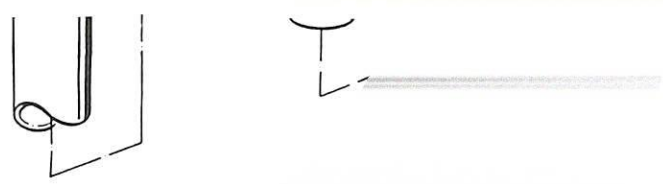

Gearbox input, output and countershafts

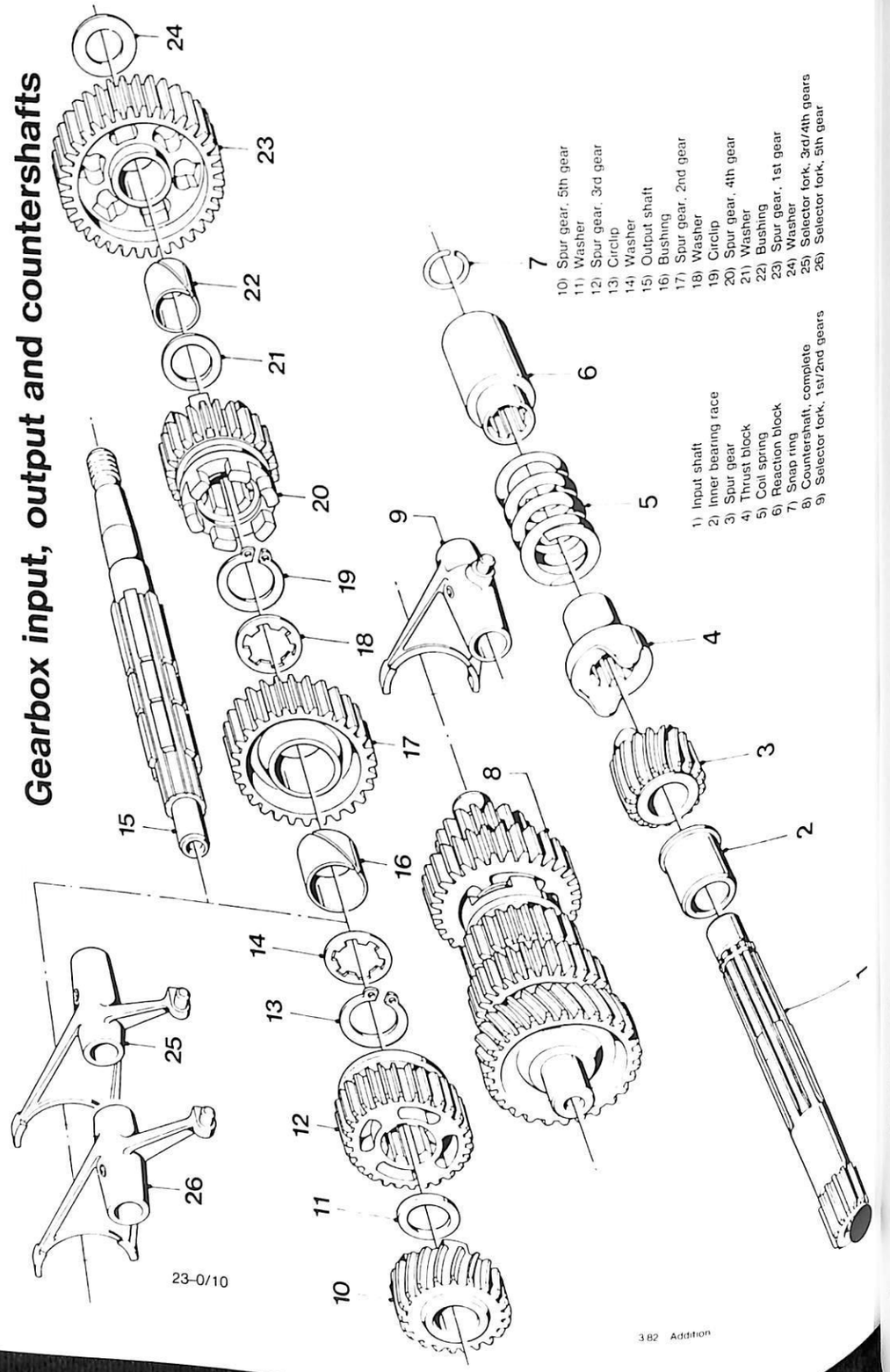

23 00 020 Gearbox – removing and refitting

Stand the motorcycle on its parking stand and on an additional support behind the parking stand.

Air filter – remove and refit (13 72 000).

Disconnect both choke cables at the carburetors and lay the left-hand half shell of the air filter housing with choke cables to one side.

Unscrew nut (1) with straight ring spanner. Slacken hexagonal bolt (2).

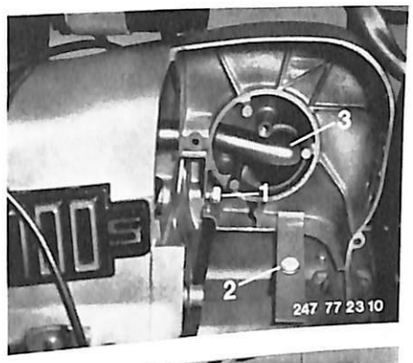

Take off the right-hand half shell of the air filter housing, at the same time pushing back breather hose (3).

Remove carburetor.

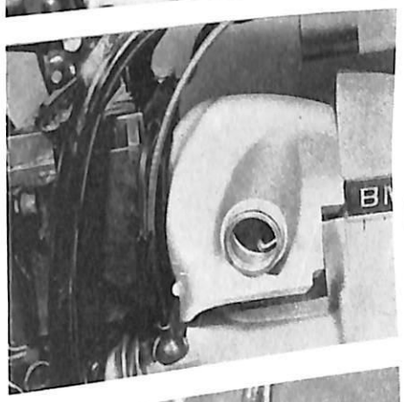

Push back the rubber protective cap on the speedometer drive end, after releasing the retaining screw and disconnecting the battery earth lead, withdraw together with the washer.

Battery – remove and refit 61 21 010

Battery bracket – remove and refit 61 21 100

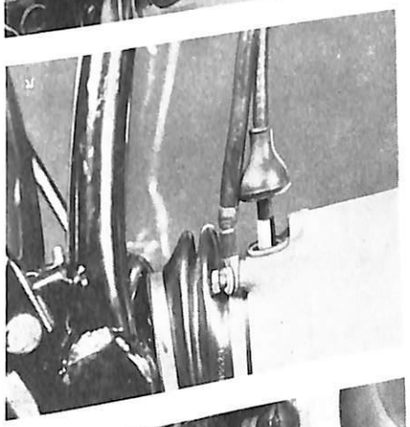

Loosen the rubber gaiter clamp on the gearbox and push back the gaiter as far as possible, not forgetting to place an oil drip tray in position.

Unscrew the four 12-sided bolts with a ring spanner and lay to one side with washers. Depress footbrake to hold the universal-joint shaft.

Tighten with BMW special tool 00 2 560. For torque, see Technical Data.

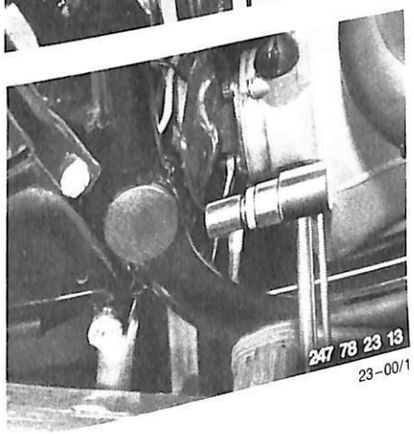

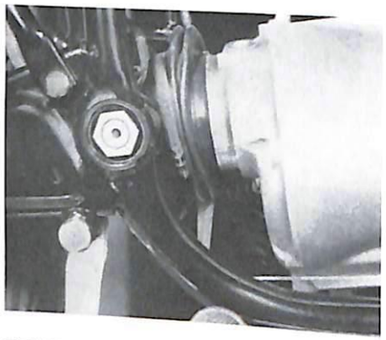

Take off the cap of the swinging arm mounting. Slacken the locknut on the bearing journals and unscrew both bearing journals.

When refitting the swinging ar. care must be taken to ensure that the two thrust collars do not project

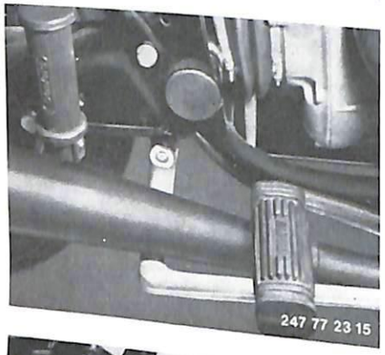

Remove footbrake lever, at the same time holding securely at the bearing bolt, and unscrew the locknut

On R 100 RS, with disc rear brake, detach brake linkage at brake cylinder (arrow) and disconnect tension spring

Clutch throwout lever – remove and refit 21 51 020

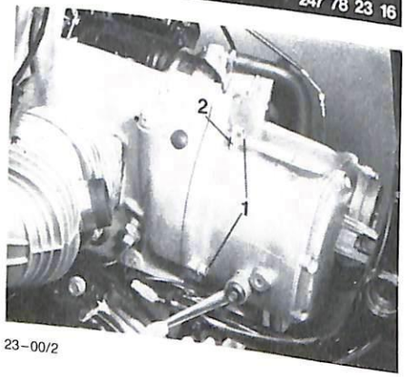

Unscrew the two hexagonal socket head bolts (1) and one hexagonal socket head thorugh bolt on the lower right of the gearbox.

When re-assembling, remember tab (2)

Disconnect gear shift linkage at pedal arm. Push back rubber gaiter, disengage spring and release pull rod from keeper with a screwdriver blade

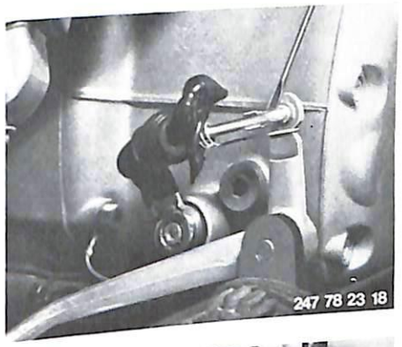

With the aid of a wooden wedge (approx. 20 mm², 400 mm [157 in] long) inserted between the tire and rear section of the frame, secure the swinging arm in its rearmost position.

Carefully remove the gearbox, place on footrest, disconnect lead for idling check

Take out gearbox completely.

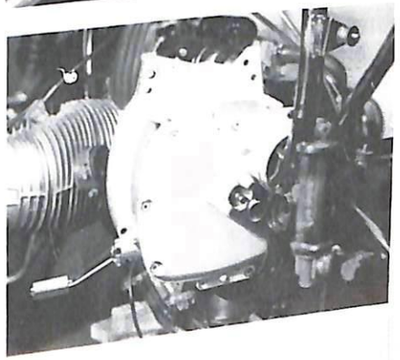

23 00 020 Gearbox – removing and installing (preparatory work for removing engine) (1981 models)

Remove the protective sheet from the lower frame tubes near the pushrod tubes.
Remove (install) air cleaner element – 13 72 000.
Remove (install) muffler (silencer) – 18 11 321.
Disconnect clutch operating cable at gearbox end.
Unscrew retaining nut (arrow) at bearing mount, pull out pin and take off withdrawal arm.

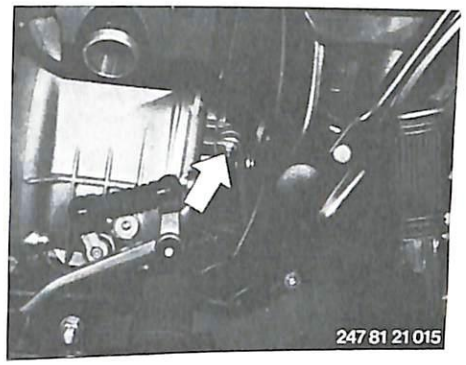

■

Pull back the rubber gaiter on the selector linkage and press the pullrod out of its keeper, using a screwdriver.

Detach footrest at frame.

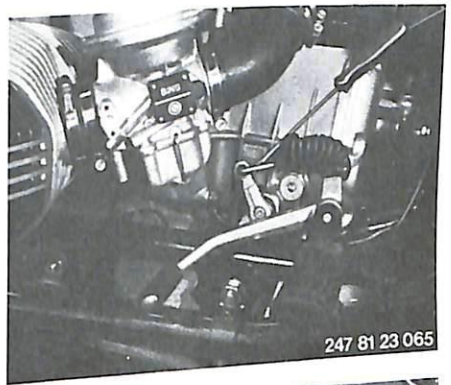

■

Loosen the hose clips at the left and right air pipes, push back the rubber sleeve and detach the pipes.

Detach the left carburettor from the cylinder head.

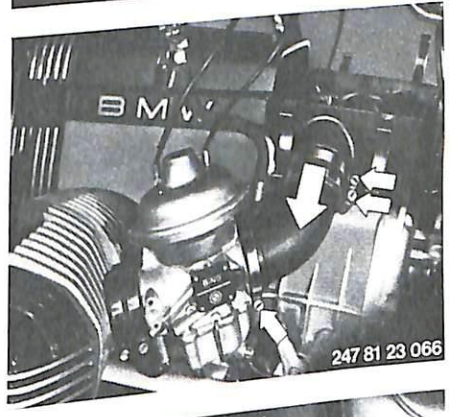

■

Pull the T-piece for the crankcase breather out of the air cleaner housing in the direction of the arrow.

■

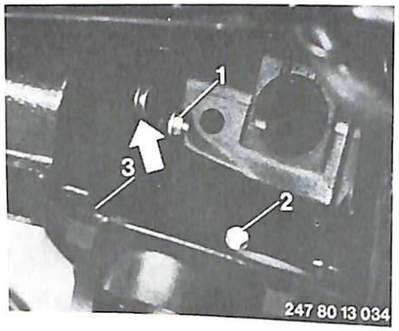

Press the breather pipe (arrow) out of the air cleaner housing. Unscrew hex nut (1) and hex bolts (2, 3) holding the housing.

■

Detach the rubber sleeve between the swinging fork and the gearbox at the gearbox end. Unscrew the twelve-sided bolts at the universal joint, preventing the rear wheel from turning by applying the brake. When installing, tighten the bolts with the special ring wrench BMW No. 00 2 560 and a torque wrench (for tightening torque, see Specifications).

Unscrew the hex bolt (arrow) and pull out the speedometer drive.

This will also release the battery earth (ground) cable.

■

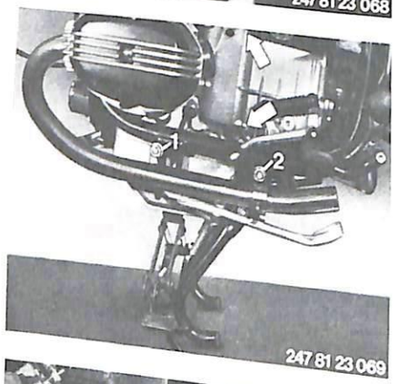

Unscrew the engine mounting pins (1, 2) and the bolts securing the gearbox to the engine (arrow) at left and right.

Support the engine with a scissors-pattern or hydraulic jack so that the mounting pins for the engine can just be pulled out.

Take off the front engine cover and pull the engine forwards as far as the lower frame tubes.

Take off the lower section of the air cleaner housing.

For tightening torques, see Specifications.

■

Detach the sleeve at the gearbox cover and remove it together with the spring. Push the gearbox back until the pushrod becomes visible. Using pliers, push the rod back through the gearbox until the gearbox can be lifted out. Catch the piston and thrust bearing with a cloth.

■

Turn the gearbox round on its side and pull the cable connecting shoes off the neutral indicating switch (arrow).

Remove the gearbox to the left and set it down carefully.

Note: before assembling grease with Molykote "U" splines of the input shaft!

■

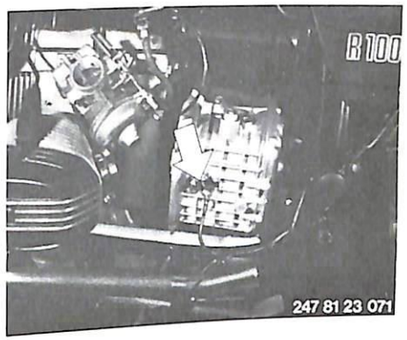

23 11 040 Gearbox cover – detaching and attaching/sealing

Remove (install) gearbox – 23 00 020.

Place gearbox on assembly stand and secure with two bolts at opposite corners.

Press the clutch withdrawal rod out of the gearbox.

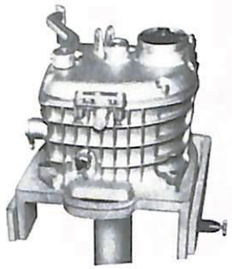

E 81 23 025

■

Remove the retaining screw, pull out the speedometer worm wheel guide sleeve and take out the worm wheel.

E 81 23 026

■

Attach counterholder BMW No. 23 1 700 without pressing-off spindle to the output shaft drive flange, using four bolts. Unscrew the retaining nut.

For tightening torque, see Specifications.

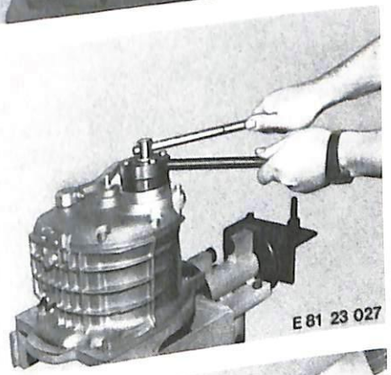

E 81 23 027

■

After bolting on counterholder BMW No. 23 1 700, force off the drive flange with the spindle. If necessary, strike the spindle lightly to loosen the taper seat.

When installing: the taper seats should be cleaned with a grease-free detergent and installed dry.

Oil the retaining nut with a high-viscosity oil.

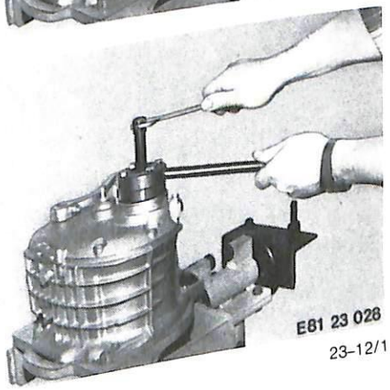

E 81 23 028

■

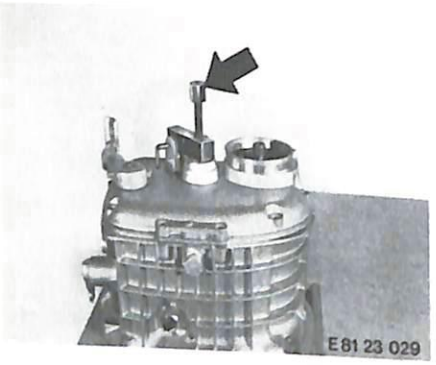

Unscrew the gearbox cover retaining bolts, heat the gearbox cover to app. 100° C (212° F) and force off with special tool BMW 23 1 630.

For tightening torques, see Specifications.

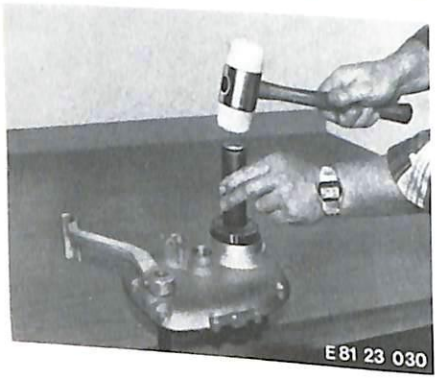

Remove the shim washers governing shaft endplay from the cover. Drive the sealing ring out of the cover with a suitable drift. Using special tool BMW No. 23 1 750, drive in a new sealing ring.

When installing: the open side of the sealing ring must face the output flange.

23 22 001 Complete gear cluster – removing and installing/stripping down

Remove (install) gearbox – 23 00 020.

Detach (attach/seal) gearbox cover – 23 11 040.

Strike the front end of the input shaft lightly with a plastic-faced hammer to dislodge the shaft, and pull it out of the housing.

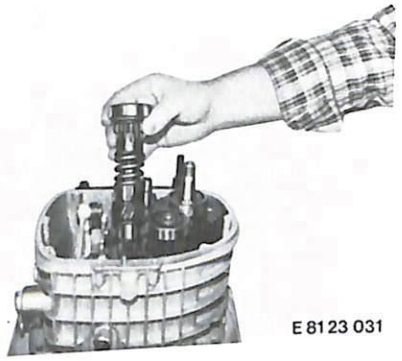

Using universal puller BMW No. 00 7 500, pull off the input shaft ball bearing with cover disc but without bearing bushing (use pressure head for crankshaft).

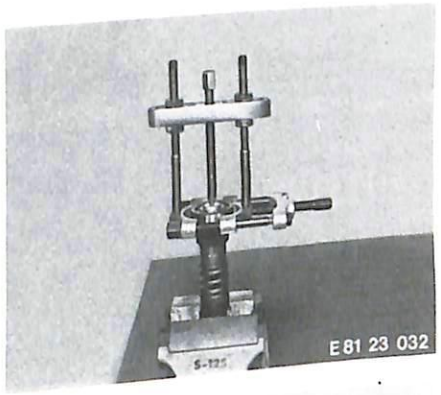

Lever out the small shaft sealing ring with a screwdriver.

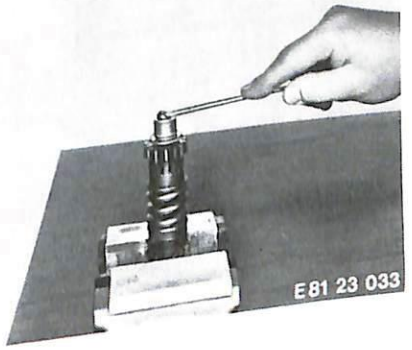

Using universal puller BMW No. 00 7 500 and the small pressure head, pull off the bearing bushing.

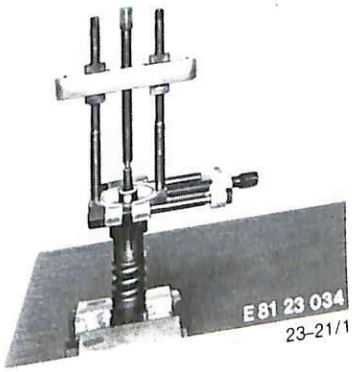

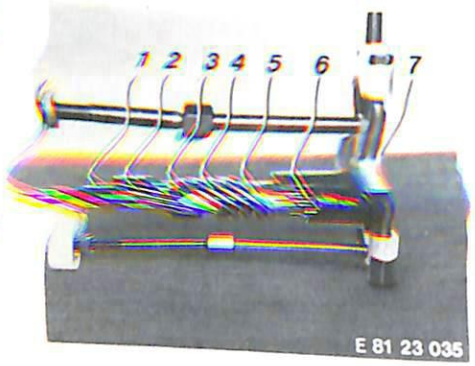

1 Input shaft
2 Spur gear
3 Thrust piece
4 Coil spring
5 Reaction piece
6 Snap ring
7 Universal puller, BMW No. 00 7 500

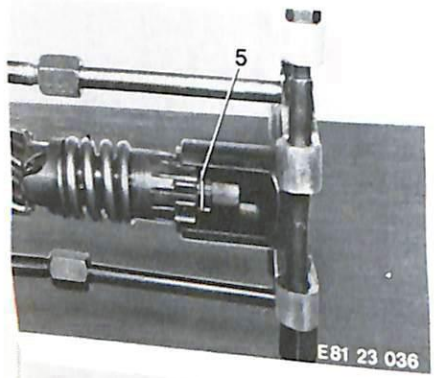

Compress the coil spring with the universal puller in conjunction with assembly bushing 23 2 655. Press out the circlip (5) with a drift or screwdriver, and release the puller.

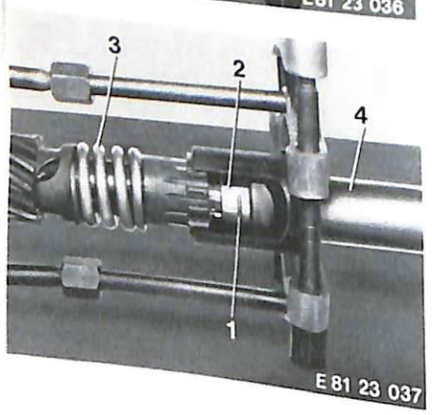

When assembling the input shaft, compress coil spring (3) with assembly bushing 23 2 655 and universal puller 00 7 500. Place circlip (1) on guide bushing (2) of special tool 23 2 650, and push on as far as the groove with sleeve (4).

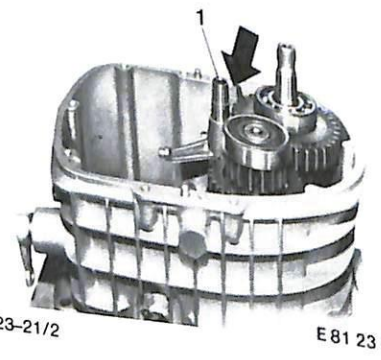

Remove (install) bearing mount for selector discs – 23 31 210.

Loosen and remove oil baffle plate (arrow). Pull out shaft for selector forks for 1st, 2nd and 5th gears (1). Remove the selector forks.

When installing: the short guide ends of the selector forks are placed together.

Heat the gearbox housing to 100° C (212° F) at the bearing seats for the output shaft and countershaft, and take out both shafts with the 3rd/4th gear selector fork (arrows).

When installing: the long guide end of the selector fork is towards the bottom of the housing.

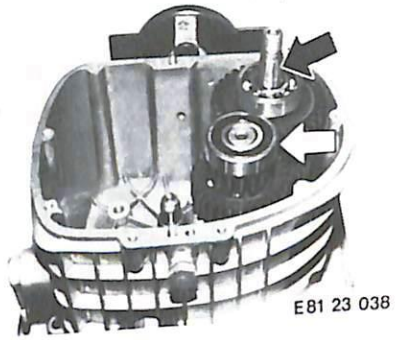

Renew the input shaft radial seal.

Lever out the existing sealing ring with a screwdriver. Drive the new sealing ring into position with drift BMW No. 21 1 650 and handle BMW 00 5 500.

Renew the input shaft roller bearing. Heat the gearbox housing to app. 100° C (212° F) and pull the bearing out (arrow) with a hook. Insert the new bearing while the housing is still warm.

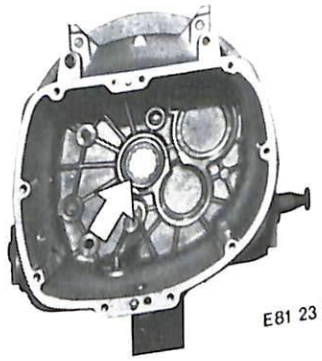

Renew the radial seal for the shift lever.

Lever the sealing ring out with a screwdriver, push the new sealing ring (arrow) on to the shift lever and press into the housing by striking lightly.

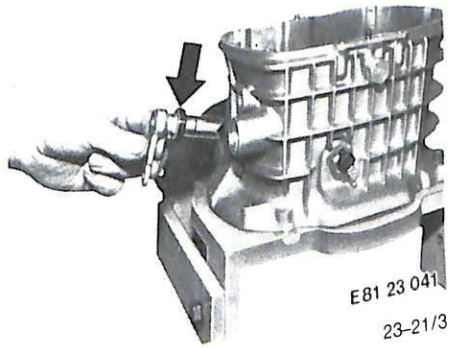

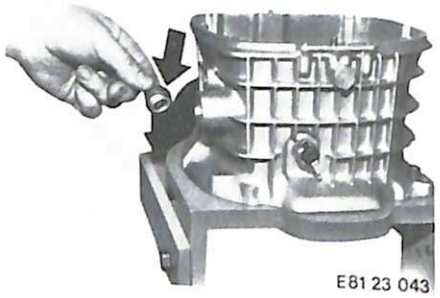

E81 23 043

Renew the pivot bearing for the shift lever.

Remove the radial sealing ring.

Pull the bearing out with the finger or with a hook. Oil the new bearing lightly and press it in.

■

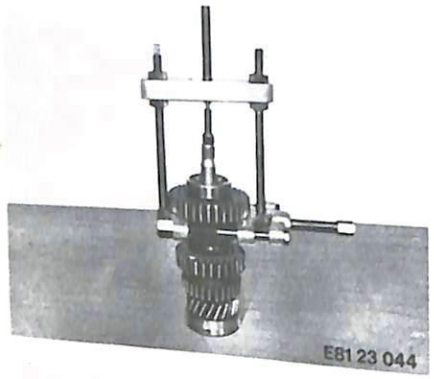

E81 23 044

Stripping down the output shaft:

Using universal puller BMW No. 00 7 500, pull off the 1st gear wheel with bearing. Take off the 4th gear wheel.

■

E81 23 045a

Clamp the output shaft into the vice with soft jaws. Remove the circlip from the bearing. Using universal puller BMW No. 00 7 500, pull off the 5th gear wheel with bearing. Take off the 3rd gear wheel.

■

E81 23 046a

Remove the Seeger circlip from the 2nd gear wheel. Pull the gear wheel with washer off the shaft.

Note: if the bushing pressed on to the shaft is defective, the output shaft must be renewed.

If defective, the countershaft must be renewed as a complete unit. Pull off the bearings (arrows) with Kukko puller BMW No. 00 7 500.

E81 23 045

■

Warm the gearbox casing to app. 80 – 100° C (176 – 212° F). Before the output shaft is installed, place the oil trap plate in the ball bearing bore of the housing. Insert the **output shaft and countershaft** (1, 2) together with the 3rd/4th gear selector fork (3) into the housing. Make sure that the shift fork does not jam. Next, insert the 1st/2nd/5th gear selector forks (4) with the small ends together, and secure with the shaft. Install shift block (5) in the neutral position, and insert the input shaft.

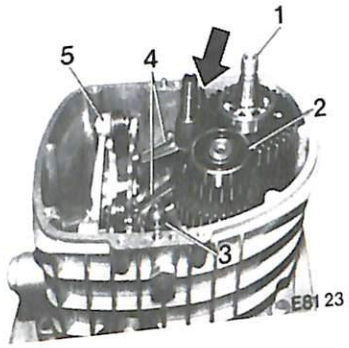

E81 23 050

■

To determine shaft location in the housing, attach measuring plate BMW No. 23 3 650 with two bolts (arrows) to hold it down firmly.

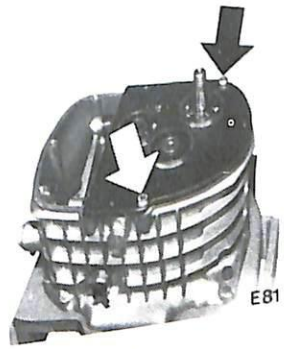

E81 23 047

■

To adjust endplay at the three gearbox shafts, use depth gauge BMW No. 00 2 550 to determine the distance between the ball bearing outer race and the measuring plate.

The measured distance plus the thickness of the material and the paper gasket (0.2 mm [0.008 in]) equals the actual distance.

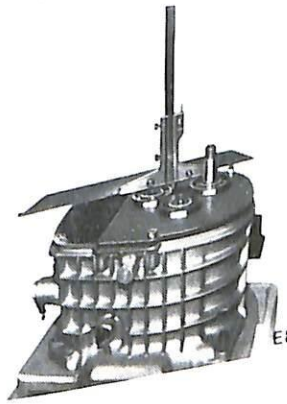

E81 23 048

■

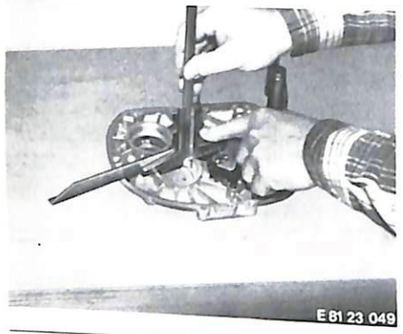

Measure the distance from the joint face on the cover to the base of the ball bearing seat in the cover.

It is advisable to draw up a table of measurements as in the example below.

For permissible endplay, see Specifications.

Cover		Input shaft	Countershaft	Output shaft
Dimension	mm (in)	15.35 (0.604)	15.75 (0.620)	15.35 (0.604)
Housing	mm (in)	7.25 (0.285)	7.30 (0.287)	7.30 (0.287)
+ Measuring plate	mm (in)	7.50 (0.295)	7.50 (0.295)	7.50 (0.295)
+ Gasket	mm (in)	0.20 (0.008)	0.20 (0.008)	0.20 (0.008)
Total dimension	mm (in)	14.95 (0.589)	15.00 (0.591)	15.00 (0.591)
Difference	mm (in)	0.40 (0.016)	0.75 (0.030)	0.35 (0.014)
Thickness of spacing shim including oil trap plate	mm (in)	0.35 (0.014)	0.70 (0.028)	0.30 (0.012)
Shim difference – thickness = endplay	mm (in)	0.05 (0.002)	0.05 (0.002)	0.05 (0.002)

23 31 001 Selector forks – removing and installing

Remove (install) gearbox – 23 00 020.

Detach (attach/seal) gearbox cover – 23 11 040.

Remove (install) selector mount.

While the housing is still warm, pull the shaft for the 1st/2nd/5th gear selector forks out and place aside together with the selector forks.

To renew the 3rd/4th gear selector forks, the gear cluster must be removed – 23 22 001.

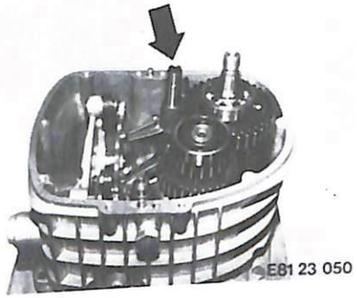

23 32 210 Bearing mount for selector discs – removing and installing

Remove (install) gearbox – 23 00 020.

Detach (attach/seal) the gearbox cover – 23 11 040.

Loosen Allen screw (arrow) and pull out the shift lever.

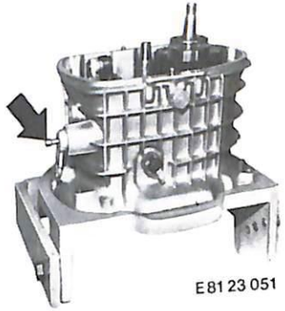

Loosen the two reamed bolts (arrows) holding the bearing mount.

For tightening torque, see Specifications.

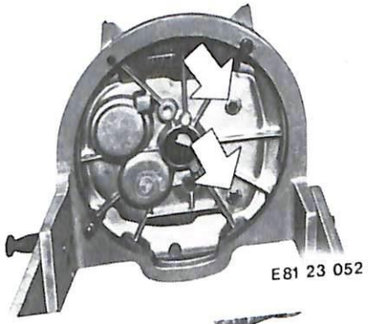

Tilt the bearing mount to free the selector forks.

Take out the bearing mount.

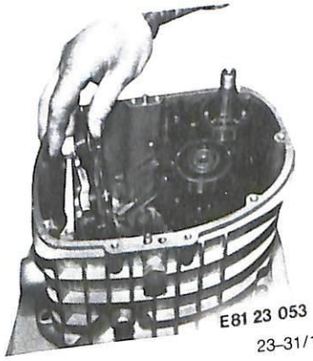

23 31 861 Selector discs – removing and installing

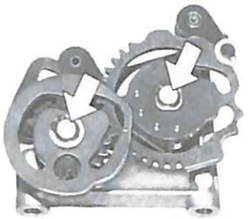

E 18 23 054

Remove (install) bearing mount – 23 31 210.

Take off the 2 Seeger circlips (arrows) holding the selector discs.

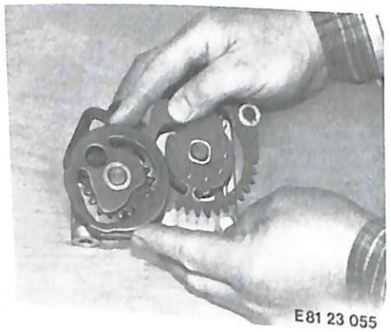

E81 23 055

Note: when assembling, make sure that the first teeth of the selector discs mesh together.

23 31 881 Shift mechanism – removing and installing

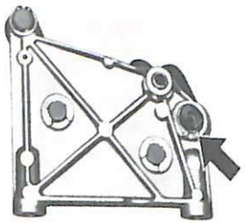

E81 23 056

Remove (install) the selector discs – 23 31 861.

Remove Seeger circlip (arrow) holding shift sector.

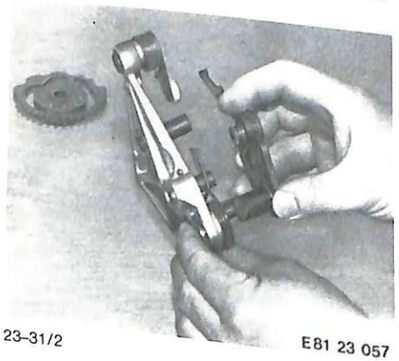

E81 23 057

Remove the complete shift sector. Leave the spring on the bearing mount.

Remove circlip (1) holding the pawl, and pull sector (2) away from pawl (3).

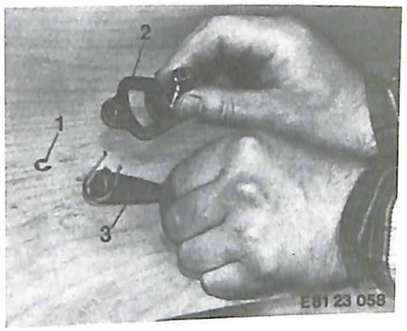

E81 23 058

Remove the Seeger circlip (arrow) for the gear locking element and pull the gear locking element out of the bearing mount.

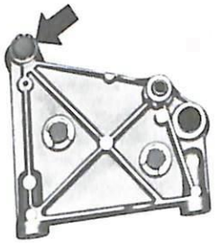

E81 23 059

23 31 401 Electric neutral indicator – removing and installing

The gearbox can ramain installed.

Unscrew the left and right nuts on the rear engine mounting rod and pull out the rod.

Drive the spacing tube (arrow) out of the engine block with a plastic-faced hammer.

Detach the electric cable. Unscrew and remove the neutral indicator.

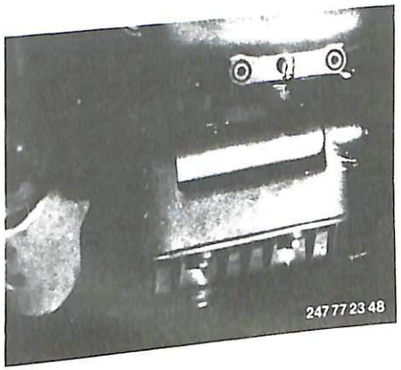

247 77 23 48

23 51 010 Kick starter – removing and installing

Detach (attach/seal) the gearbox cover – 23 11 040.

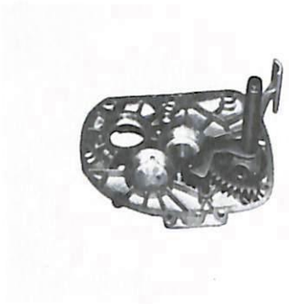

E 81 23 061

■

Remove the lock ring for the intermediate gear wheel and pull the gear wheel off the kick starter shaft.

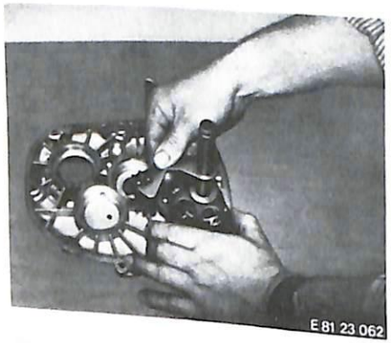

E 81 23 062

■

Loosen the wedge screw on the kick starter arm and drive it out with powerful hammer-blows. Pull off the arm.

Pull the kick starter shaft out of the gearbox cover.

For tightening torque, see Specifications.

E 81 23 063

■

Troubleshooting – gearbox

Malfunction	Cause	Remedy
Noise from gearbox	Defective bearing	Renew bearing
	Shift forks binding	Examine forks for rub marks, grind down or renew
	Gearbox shafts not shimmed correctly	Measure and determine new shim thicknesses
	Noise from gearwheels – incorrect endplay or radial play	Check endplay and radial play
Gear shift is stiff	Gearbox shaft shims not providing sufficient play	Measure and alter thickness of shims as necessary
	Pawl touching large shift disc (for 1st, 2nd and 5th gears)	Align pawl correctly
Gear shift is stiff when coasting (overrun)	Gearbox shafts wandering	Measure and alter thickness of shims as necessary
Gear shift sticking	Burr on shift cam or rough surface in journal guide	Re-machine or renew shift cam
	Shift fork sticking on output shaft, too much play	Check output shaft and fork, renew if necessary
Gear shift moves too far	Roller on locking device worn	Renew
	Too little spring tension on locking device	Check tension, renew spring if necessary
	Pawl is bent	Straighten pawl
Clutch judder	Input shaft not shimmed correctly	Measure and determine new shim thicknesses

26 Drive shaft

Specifications ..... Page 26– 0/3
Specifications (1979 models) 26– 0/4
Specifications (1981 models) 26– 0/5
26 11 000 Drive shaft – removing and installing (model without torsional vibration damper) 26–11/1
26 11 000 Drive shaft – removing and installing (model with torsional vibration damper) 26–11/1

Technical Data

Model	R 60 7	R 75/7	R 80 7	R 100 7	R 100 S	R 100 RS
Arrangement	Enclosed drive shaft in the right-hand swinging arm, with needle bearing universal joint at the gearbox end and curved-spline coupling at the input end					
Type of oil, over 5° C (41° F) below 5° C (41° F)	Brand-name hypoid gear oil SAE 90 Brand-name hypoid gear oil SAE 80					
Filling capacity, ltr. (Imp. pints)	0.15 (0.26/0.16)					

Tightening torques Nm (ft. lb)

Hexagonal nut on coupling bell housing	200...220 (147...162)
Twelve-sided bolt	38 + 4 (28+2.9)

All other bolts, screws and nuts are to be tightened in accordance with the usual figures as recommended by the manufacturers or in accordance with the latest BMW Standard Specification 60002.0.

Drive Shaft

Specifications — '79 models

Model	R 80/7	R 100 T	R 100 S	R 100 RT	R 100 RS
Arrangement	Fully-enclosed drive shaft with torsional vibration damper in right swinging arm tube; universal joint at gearbox end, coupling with curved splines at final drive end.				
Type of oil, over 5° C (41° F)	Brand-name hypoid gear oil SAE 90				
Type of oil, below 5° C (41° F)	Brand-name hypoid gear oil SAE 80				
Filling capacity, ltr. (Imp. pints)	0.15 (0.26)				

Tightening torques Nm (ft. lb)

Twelve-sided bolt	38 + 4 (28 + 2.9)

All other bolts, screws and nuts are to be tightened in accordance with the usual figures as recommended by the manufacturers or in accordance with the latest BMW Standard Specification 60002.0

11.78 Addition

3/82 Addition

Drive shaft

Specifications

Model	R 100	R 100 CS	R 100 RT	R 100 RS
Layout	Propeller shaft with torsional vibration damper enclosed in right swinging arm tube, universal joint running on needle roller bearing at gearbox end, domed coupling with curved splines at rear wheel end			
Oil grade above 5° C (41° F)	Brand-name hypoid gear oil, SAE 90 API class GL 5			
Oil grade below 5° C (41° F)	Brand-name hypoid gear oil, SAE 80 API class GL 5			
Oil content liters (Imp. pints, US quarts)	0.15 (0.26, 0.16)			

Tightening torques Nm (lb. ft.)

Twelve-sided bolt	40 (29.5)

All other bolts and nuts to be tightened to the customary values as shown in the manufacturers' tables or the latest BMW 60002.0 standards sheet.

Drive shaft

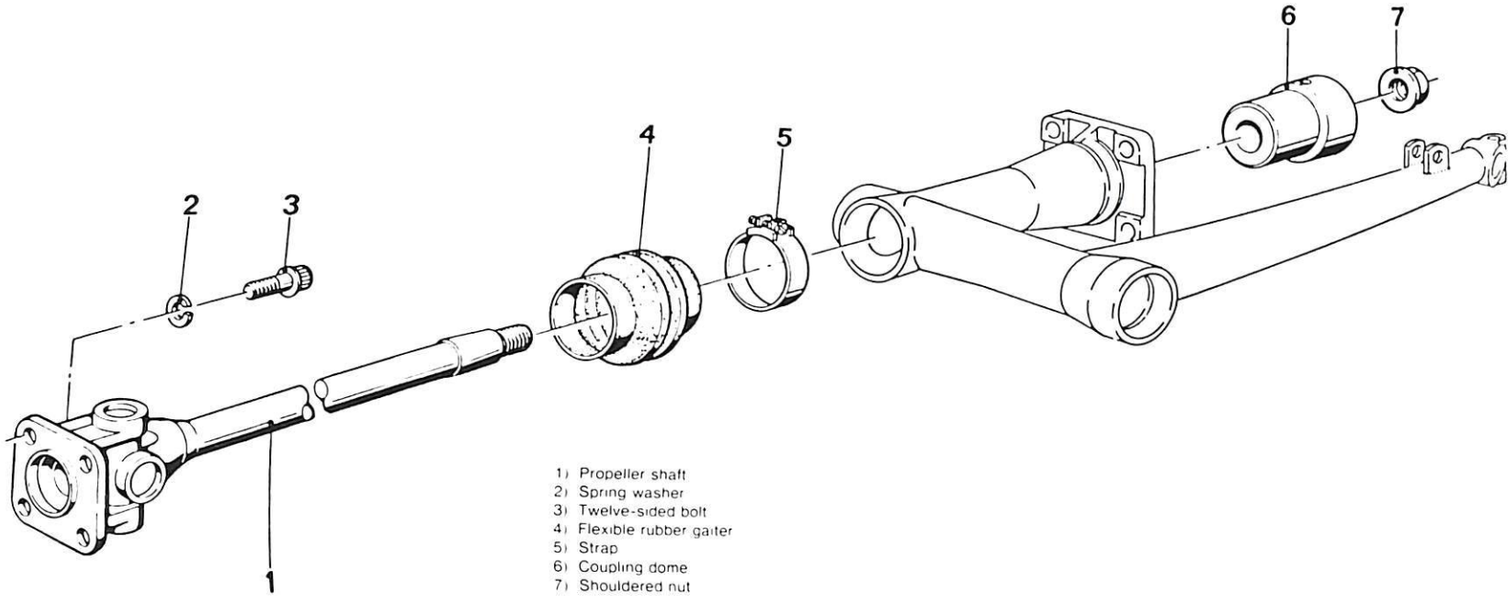

1) Propeller shaft
2) Spring washer
3) Twelve-sided bolt
4) Flexible rubber gaiter
5) Strap
6) Coupling dome
7) Shouldered nut

296

Drive shaft with torsional vibration damper (from 1979 models on)

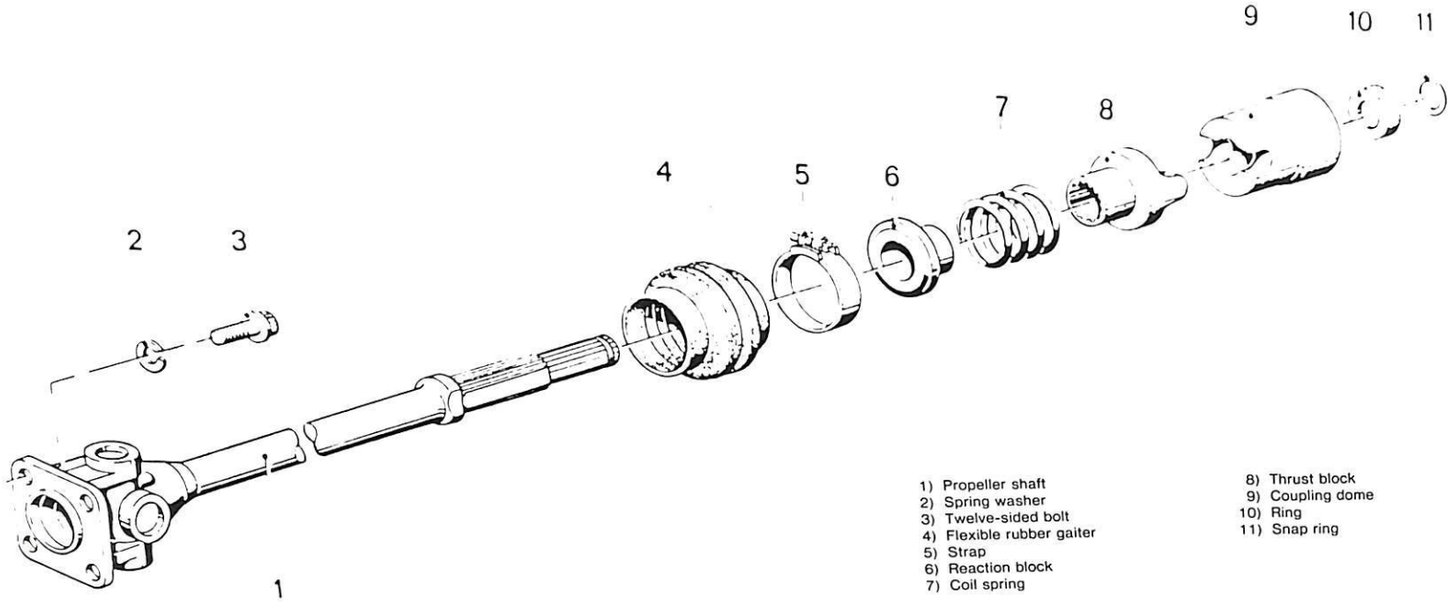

1) Propeller shaft
2) Spring washer
3) Twelve-sided bolt
4) Flexible rubber gaiter
5) Strap
6) Reaction block
7) Coil spring
8) Thrust block
9) Coupling dome
10) Ring
11) Snap ring

26 11 000 Drive shaft – removing and refitting (models without torsional vibration damper)

Rear wheel swinging arm – remove (33 17 350).

Clamp the rear wheel swinging arm in a bench vice fitted with jaw pads. Insert toothed back plate holder BMW No. 26 1 600 in the inside toothing of the coupling bell housing and unscrew the nut from the drive shaft with the aid of the appropriate socket wrench.

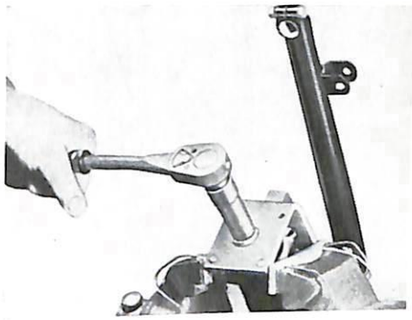

■

Using extractor 26 1 650, pull the coupling bell housing off the drive shaft.

If the housing is seated very securely, tighten the thrust spindle and give it a sharp blow. Remove drive shaft and housing.

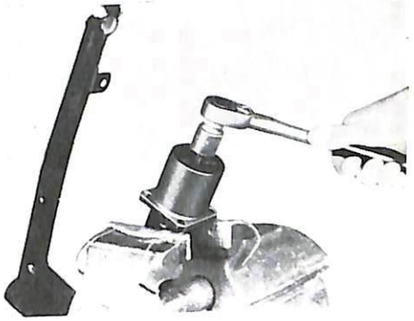

■

Check universal joint for wear. Test for radial play by turning to produce relative rotary movement between flange and shaft. Test for endplay (axial) by pushing along line of shaft.

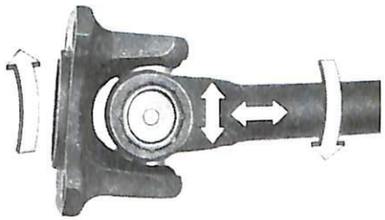

247 77 26 12

■

Note when fitting:

Before fitting the housing it is essential to clean the inside and outside cone with trichlorethylene (do not use petrol/gasoline). See Technical Data for tightening torque.

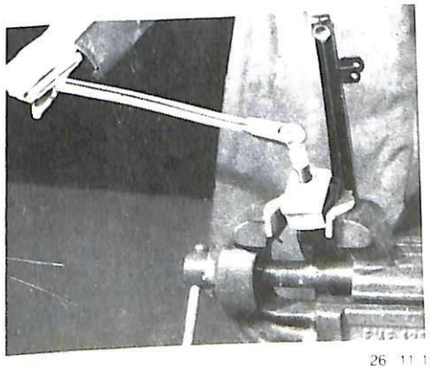

■

26 11 000 Drive shaft – removing and installing (models with torsional vibration damper)

Remove rear wheel swinging arm – 33 17 350.
Clamp BMW assembly fixture 26 1 700 into vise, and insert swinging arm into fixture

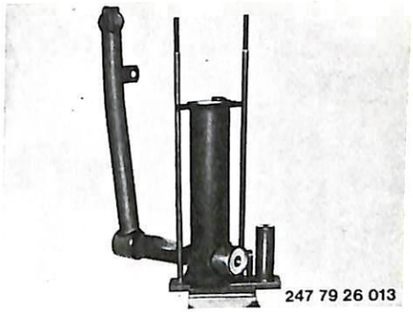

247 79 26 013

Attach upper plate of fixture and tension the fixture (use spacing sleeves (arrows) for short swinging arm)

247 79 26 014

Insert drift into slot and extract the snap ring.
Release the tension slowly from the fixture

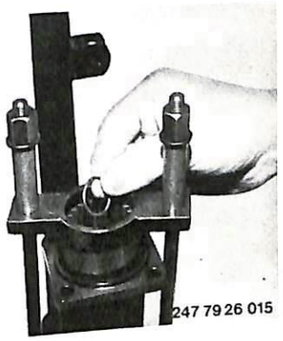

247 79 26 015

Remove the swinging arm from the fixture.
Pull the drive shaft and loose components out of the swinging arm.

1 Drive shaft
2 Thrust block
3 Spring
4 Reaction block
5 Coupling shell
6 Ring
7 Snap ring

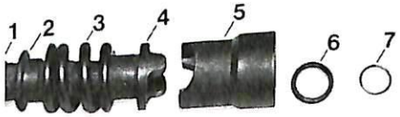

247 79 26 016

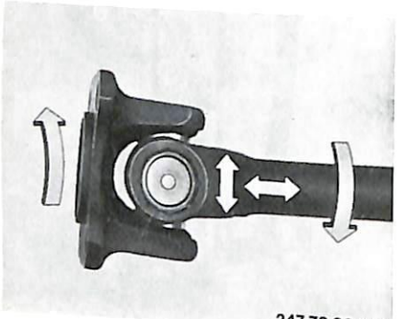

247 79 26 018

Check universal joint for wear: check radial play by turning flange and shaft in opposite directions, and determine endplay by pulling and pushing the two components along the axis of the shaft. Renew drive shaft if necessary.

■

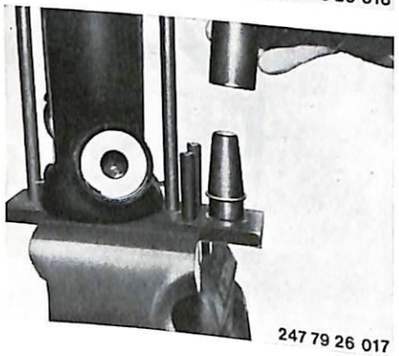

247 79 26 017

When installing:

Use slip-over and driving sleeves to install snap ring (7). Press ring over taper of slip-over sleeve with driving sleeve. Mount the slip-over sleeve on the drive shaft and force the snap ring into its groove with a hammer and the driving sleeve.
After the fixture has been released, the snap ring must be correctly located in ring (6).

■

31 Front forks

		Page 31– 0/3
Specifications		31– 0/5
Specifications (1979 models)		31– 0/7
Specifications (1981 models)		31–42/1
31 42 009	Measuring telescopic forks	31–42/2
31 42 050	Steering damper – removing and installing	31–42/2
31 42 100	Telescopic forks – removing and installing	31–42/6
31 42 103	Telescopic forks – stripping and assembling	31–42/6
31 42 103	Telescopic forks – stripping and assembling (1981 models)	31–42/9
31 42 321	Taper roller bearing for telescopic forks – removing and installing	31–42/11
	Troubleshooting – front forks	

Front Forks

Technical Data

Model	R 60/7	R 75/7	R 80/7	R 100/7	R 100 S	R 100 RS
Wheel bearing lubrication	Branded multipurpose lubricating grease with 180° C (355° F) drip point					
Front wheel castor, mm(in)	approx. 95 (3.74) – no provision for adjustment					
Steering lock	approx. 42° to either side					35°
Front fork lock angle	42°					35°
Spring travel (75 kg [165 lb] load) mm(in) Upward mm(in) Downward mm(in)	200 (7.87) 120 (4.72) 80 (3.15)					
Test fitting length (measured from top of support tube to the machined surface on the lower fork mount) mm(in)	160 (6.30)					
Fork stand tube	hard chromed					
Fork sliding tube	light metal casting					
Fork bridge, lower	light metal forging					
Oil capacity per fork column, litre (Imp. pint)	0.25 (0.44, 0.26)					
Type of oil	Shock absorber oil, Shell 4001, Shell Aero Fluid 4, BP Aero Hydraulic 1, Castrol DB Hydraulic Fluid, Castrol Shock Absorber 1–318					
Telescopic fork stand tube (hard chromed) Outer diameter mm(in)	$36^{-0.050}_{-0.075}$ $\left(1.417^{-0.002}_{-0.003}\right)$					
Stand tube for telescopic fork (maximum permissible deflection in mm) (in)	0.1 (0.004)					
Fork sliding tube inside diameter mm(in)	$36^{+0.025}_{0}$ $\left(1.417^{+0.001}_{0}\right)$					
Running play of fork sliding tube on fork stand tube, maximum, mm(in)	0.24 (0.0094)					

Front axle

Specifications (1979 models)

Model	R 80/7	R 100 T	R 100 S	R 100 RT	R 100 RS
Extl. dia. of piston on damper tube mm (in)	27.7 ± 0.1 (1.091 ± 0.004)				
Intl. dia. of fixed fork tube mm (in)	28 ± 0.15 (1.102 ± 0.006)				
Piston clearance in fixed fork tube mm (in)	0.05 . . . 0.55 (0.002 . . . 0.022)				
Relaxed length of fork spring mm (in)	567 (22.32)			543 (21.38)	

Tightening torques Nm (lb. ft)

Telescopic fork centering nut	120 . . . 130	(88 . . . 96)	Base screw in slider tube	80 . . . 100	(59 . . . 74)
Clamp bolt at clamp ring	10 . . . 12	(7.4 . . . 8.8)	M 8 x 1 mm nut connecting damper, base screw and slider tube	22 . . . 23	(16.2 . . . 17.0)
Upper spring support for telescopic forks	120 . . . 130	(88 . . . 96)	Axle clamp bolt	15 ± 2	(11 ± 1.5)
Clamp bolts at lower fork bridge	35 . . . 40	(26 . . . 29)	Upper mudguard stirrup	20 . . . 25	(14.7 . . . 18.4)
End plug at damper tube (bottom) and piston (spring support) at top	25	(18.4)			

All other bolts and nuts are to be tightened as shown in the manufacturers' tables or on the latest BMW 60002.0 standards sheet.

Front axle

Specifications (1981 models)

Model	R 100	R 100 CS	R 100 RT	R 100 RS
Wheel bearing lubrication	Brand-name anti-friction bearing grease, usable temperature range –30 . . . + 140 °C (–22 . . . +284 °F), drip point 150 . . . 230 °C (302 . . . 446 °F), high corrosion protection, good water/oxidation resistance; e.g. Shell Retinax A			
Front wheel caster mm (in)	app. 95 (3.74); not variable			
Steering lock angle	app. 42 ° to each side		35 °	
Front fork angle	42 °		35 °	
Suspension travel (75 kg [165 lb] load) mm (in)	200 (7.87)			
Test length when installed (measured from top of support tube to machined face on lower fork guide) mm (in)	app. 161 (6.34)			
Fixed fork tubes	hard chromium-plated			
Sliding fork tubes	cast light alloy			
Lower fork bridge	forged light alloy			
Oil content per fork leg (initially or when changing oil) liters (Imp. pints. US quarts)	0.22 (0.39, 0.23) +0.1 (0.18, 0.1)			
Oil grade	Shell 4001; Shell Aero Fluid 4; Castrol DB Hydraulic Fluid; Castrol Shock Absorber Oil 1-318; Castrol Fork Oil Extra Light; Castrol LHM (preferred for below 0 °C / 32 °F); Aral P 3441 shock absorber oil; Aral 1010; Mobil Aero HFA; Mobil DTE 11; Esso Univis J 13; BP Aero Hydraulic; BP Olex HLP 2849			
Telescopic fork fixed tube (hard chromium-plated) extl. dia. mm (in)	$36^{-0.050}_{-0.075}$ ($1.417^{-0.002}_{-0.003}$)			
Max. permissible runout of fixed fork tube mm (in)	0.1 (0.004)			
Fork slider tube intl. dia. mm (in)	$36^{+0.025}_{0}$ ($1.417^{+0.001}_{0}$)			
Clearance between fork slider and fixed fork tubes, max. mm (in)	0.05 . . . 0.1 (0.002 . . . 0.004)			

Specifications (1981 models)

Model	R 100	R 100 CS	R 100 RT	R 100 RS
Extl. dia. of piston on damper tube mm (in)	27.7 ± 0.17 (1.091 ± 0.007)			
Intl. dia. of fixed fork tube mm (in)	28 + 0.15 (1.102 + 0.006)			
Piston clearance in fixed fork tube mm (in)	0.15 . . . 0.62 (0.006 . . . 0.024)			
Relaxed length of fork spring mm (in)	539^{+12} ($21.22^{+0.47}$)			
Wire diameter of fork spring mm (in)	4.25 (0.167)			

Tightening torques Nm (lb. ft)

Cap nut	120	(88)	Retaining bolt for damper in slide tube	35	(26)
Slotted nut	zero play		Axle clamp bolts	17	(12.5)
Fork bridge clamp bolts	40	(29)	Oil drain plugs	8	(5.9)
Upper spring mount	120	(88)	Oil filling plugs	9	(6.6)

All other bolts and nuts are to be tightened as shown in the manufacturers' tables or on the latest BMW 60002.0 standards sheet.

Fixed fork tube with damper (from 1981 models on)

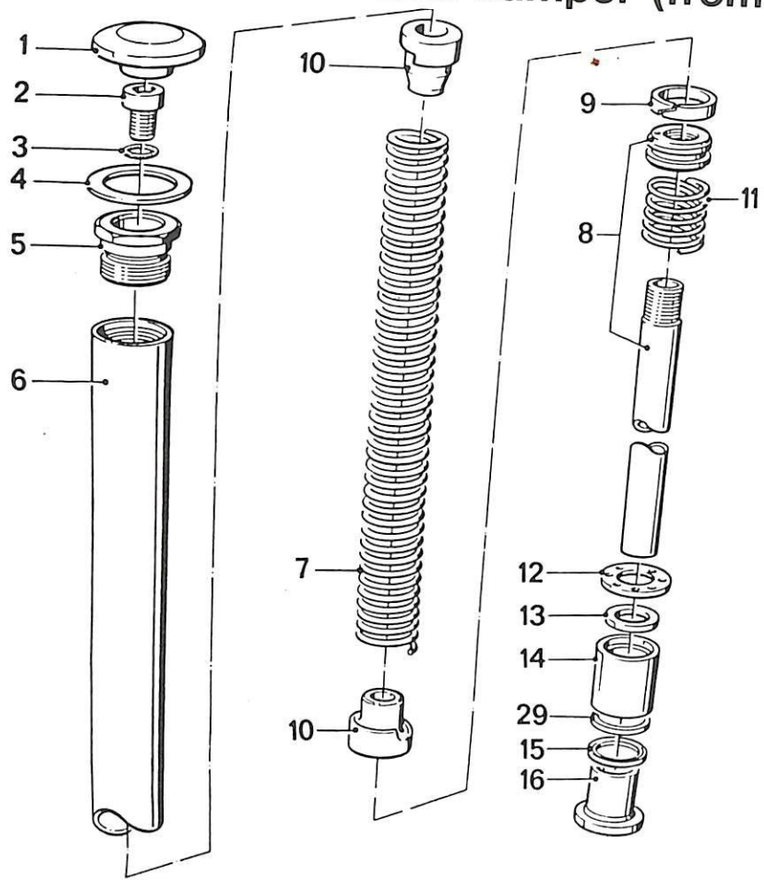

1) End cap
2) Machine screw
3) Sealing ring
4) Shim washer
5) Support bearing
6) Fixed tube
7) Coil spring
8) Damper
9) Guide ring
10) Spring support
11) Coil spring
12) Shim washer
13) Valve disc
14) Valve housing
15) Lock ring
16) Damper tube mount

Fixed fork tube with damper

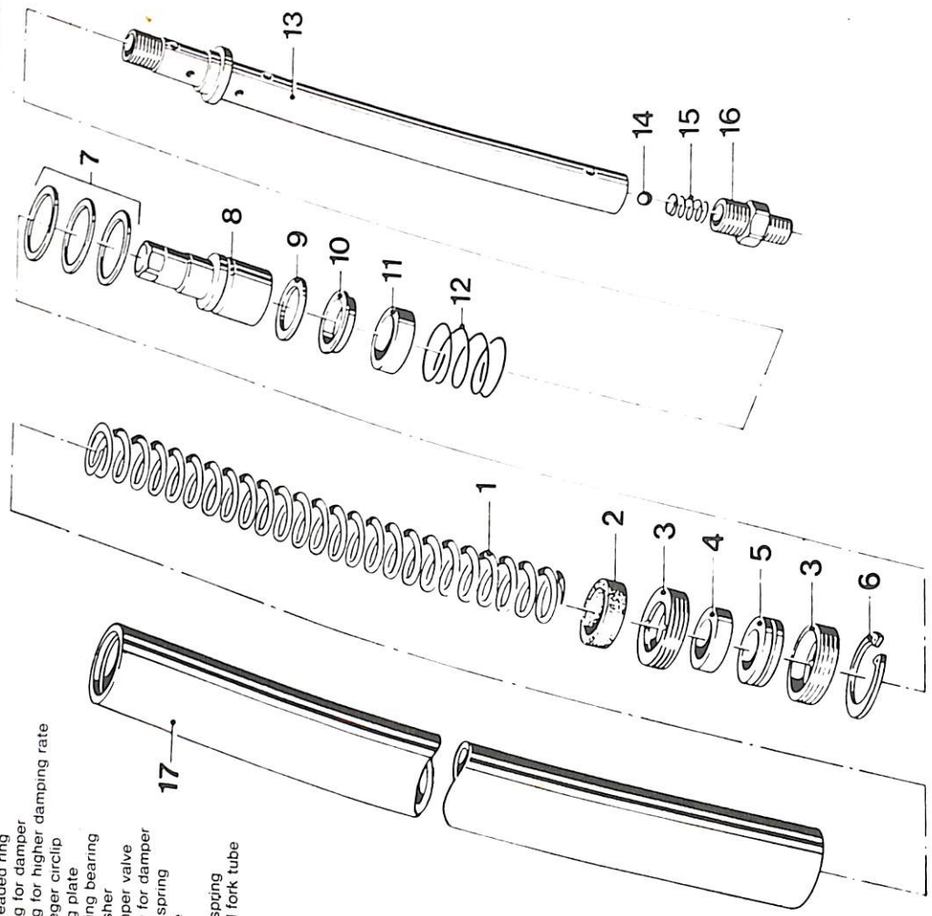

1) Fork spring
2) Stop bushing
3) Threaded ring
4) Ring for damper
5) Ring for higher damping rate
6) Seeger circlip
7) Ring plate
8) Spring bearing
9) Washer
10) Damper valve
11) Ring for damper
12) Coil spring
13) Tube
14) Ball
15) Coil spring
16) Fixed fork tube

31 42 009 Measuring telescopic forks

Remove (install) telescopic forks – 31 42 100.

Strip down telescopic forks – 31 42 103.

In particular when the forks have been damaged, it is important to examine the lower fork guide and the fixed and slider tubes carefully for possible cracks.

Lay both the ends of the removed fixed tubes in Vee guides or hold in a center cradle to test for straightness.

See Specifications for relevant measurements.

Warning: bent slider tubes **must not be re-aligned; there is a risk of fatigue fracture.**

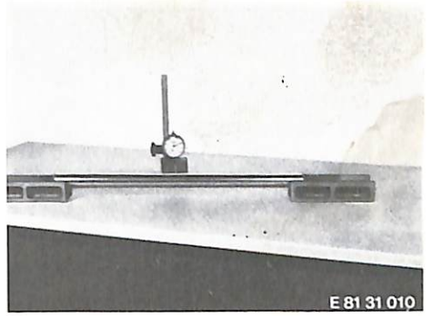

To check the lower fork guide, insert two new slider tubes (test length when installed measured from upper edge of support tube to machined face on lower fork guide=161 mm [6.34 in]).

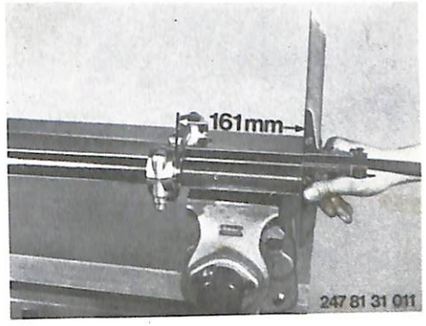

Lay two BMW No. 31 4 620 measuring rules over the ends of the slider tubes and check for straightness.

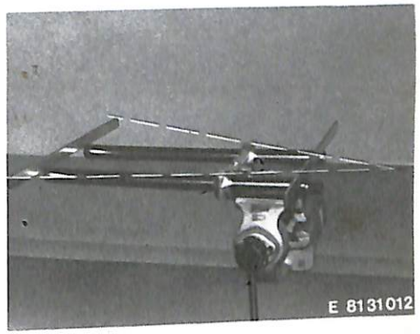

Test the slider tubes for parallelity with a slide gauge. Check that the fork guide tube is flush with the slider tubes, and mount the upper fork bridge. First, screw the spring mount (1) into the fork guide tube, then the cap nut (2). It should be easy to screw the centering collar into the fork bridge.

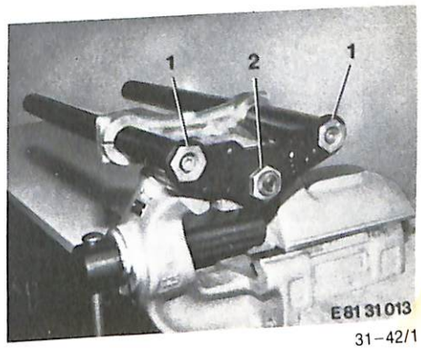

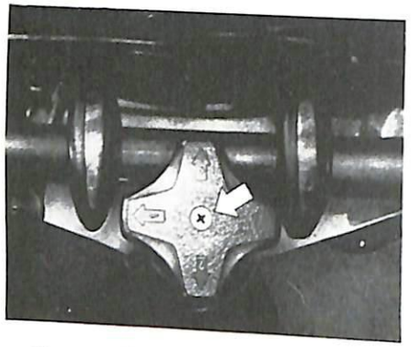

31 42 050 Steering damper – removing and installing

Remove the countersunk screw from the star handle. Pull off the star handle and the rubber.

On the R 100 RT/RS, detach the left and right engine fairings. Remove the screen panel and the center engine fairing. Take off the fuel tank.

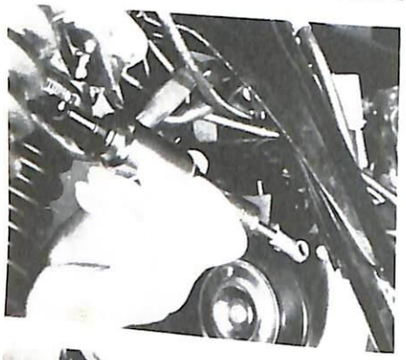

Pull off the safety hoop and press the damper out of the ball sockets.

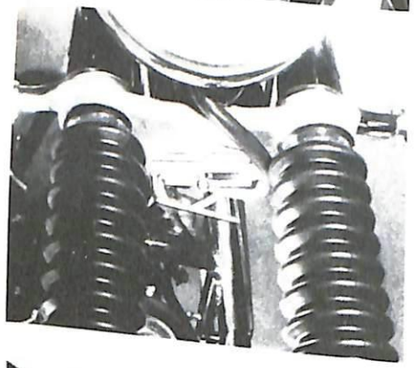

Remove the 2 machine screws on the plate. Detach the plate with slide and latch, and remove the gearwheel downwards.

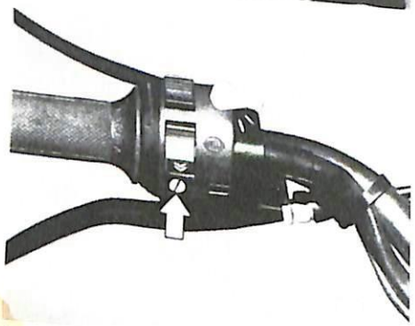

31 42 100 Telescopic forks – removing and installing

Remove (install) front wheel – 36 30 300.
Remove (install) front mudguard – 46 61 000.
Remove (install) steering damper – 31 42 050.

On R 100 RT/RS, detach left and right engine fairings. Detach screen panel and center engine fairing. On R 100 S/CS, detach cockpit fairing – 43 63 020.

Disconnect the earth (ground) cable at the battery. At the left handlebar grip, take out the closure screw (arrow) of the combined electric switch. Remove the plastic tape from the handlebar.

Remove the switch from the right steering handle in the same way. The screw is shown by an arrow.

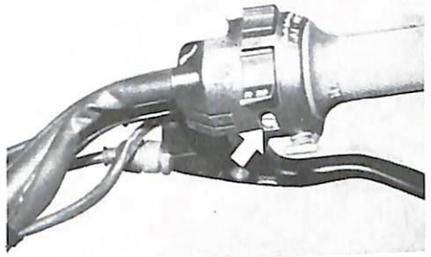

Detach star handle for steering damper and impact-absorbing pad (R 100 RS only).

Remove two nuts with spring washers from the clamp mountings for the handlebar. Lay aside the handlebar with fittings and attached cable controls.

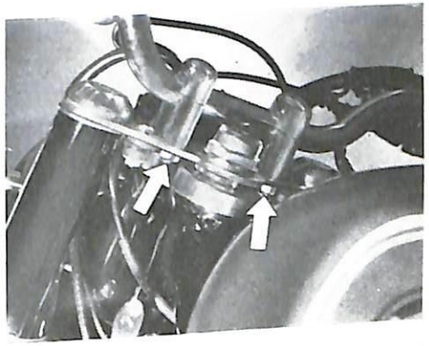

Remove one screw with washer, two rubber rings and rubber sleeve from the left and right of the headlamp; allow the headlamp to hang downward taking care to avoid damage.

Note when fitting: Align headlamp beam (63 10 004).

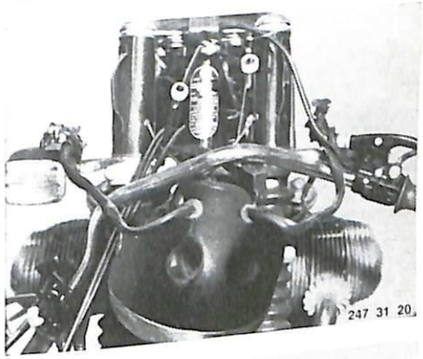

Unscrew the two light metal caps left and right with a socket wrench.

Remove centering nut (see Technical Data for tightening torque).

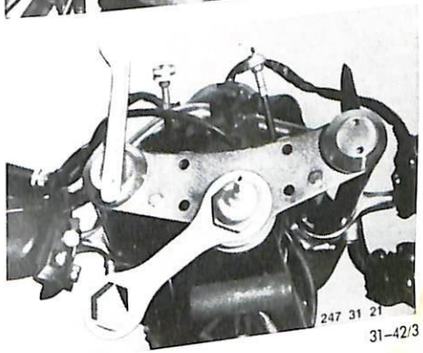

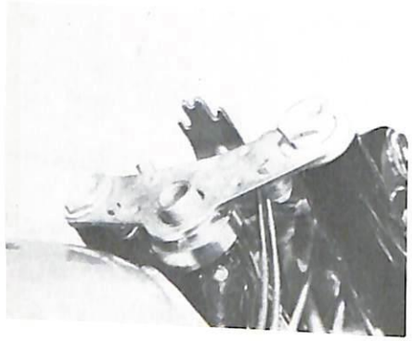

Unscrew the two upper spring seatings with their shims (see Technical Data for tightening torque) and take off the upper fork yoke.

■

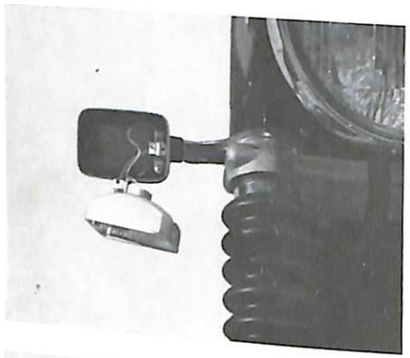

Unscrew the lenses from the left and right turn indicators and detach the leads from the reflectors.

■

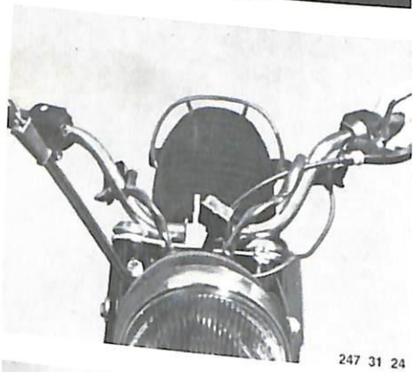

247 31 24

Note when fitting: Care must be taken to ensure accurate positioning of the control cables

■

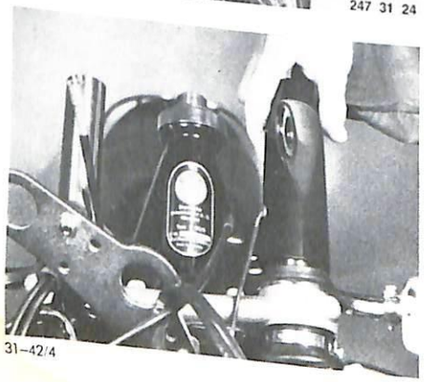

31–42/4

Remove left and right headlamp mounts with rubber rings and turn indicator leads (the bottom rubber rings are provided with bores for breather tubes in the fork yoke and for leads to the turn indicators).

Remove turn indicator housing with mount.

■

Unscrew the brake pipe holder from the left slider tube. If the motorcycle has a twin front disc brake, also detach the brake pipe holder from the right slider tube.

■

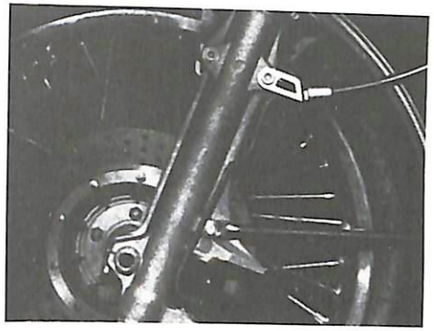

When installing: to avoid having to bleed the brakes, **do not** slacken off brake pipe screw (1).

Unscrew end cap (2) and remove complete with spring. Pull out the eccentric pin (see removal and installation of swing caliper – 34 11 020).

On the 100 RT/RS, remove the center engine fairing and the screen panel. Remove the steering damper – 31 42 050.

From 1981 models on, detach the brake caliper from the fork slider tube.

■

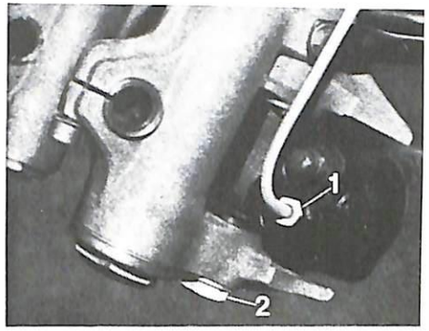

Unscrew the grooved nut. Remove the protective cap for the ring.

Pull the fork down out of the frame, striking lightly with a plastic-faced hammer if necessary on the fork guide tube to free it. Note the presence of the taper roller bearings. The outer races for the upper and lower taper roller bearings remain in the frame tube.

When installing: coat the bearing races and taper roller bearings with grease.

Install the upper taper roller bearing (1) and carefully insert the forks with the lower taper roller bearing (2) into the frame.

Important: note make of bearings.

■

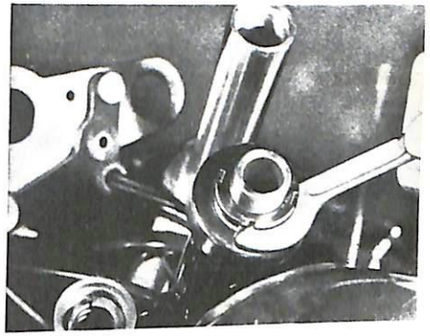

The wiring harness, speedometer drive shaft and revolution counter drive shaft must pass below the lower fork bridge.

Install the protective cap for the upper taper roller bearing and screw on the slotted nut. Tighten the nut until there is no play in the steering. Using a plastic-faced hammer, strike the upper and lower fork guide tubes lightly. When finally tightening the cap nut, note that the threads of the slotted nut penetrate deeper into the thread of the fork guide tube, so that the bearing is preloaded to a greater value. If necessary, slacken off the slotted nut by app. 1/2 turn and retighten the cap nut.

Adjust the steering – 32 00 054.

■

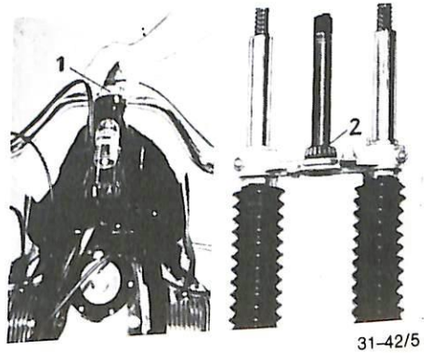

31–42/5

31 42 103 Telescopic fork – dismantling and assembling

Telescopic fork – remove and refit (31 42 100).
After removal, empty the fork by pumping motion at the sliding tubes.

Clamp the fork in a bench vice with the BMW 31 4 600 clamping block.

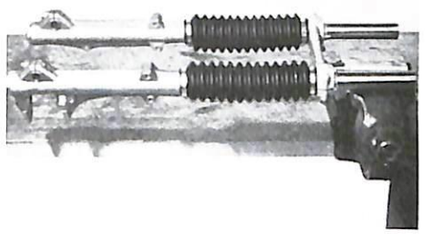

■

Loosen off two clamping straps each on the left and right of the rubber gaiter. Remove the rubber caps from the bottom screw couplings, unscrew the M 8 × 1 damper fastening nut (see Technical Data for tightening torque) at the same time holding firmly in place with an Allen key.

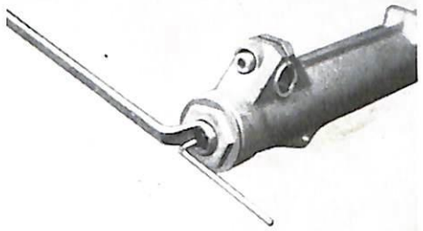

■

Draw off the sliding tubes, remove rubber gaiter.

Note when fitting: Use BMW tool 31 4 650 to tap in a new cap-type gasket.

■

When fitting the rubber gaiter, slide the appropriate vent aperture onto the clamping pin in the lower fork guide.

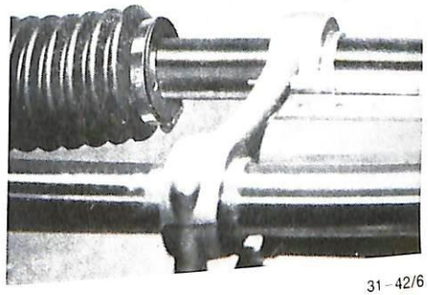

■

Remove the bottom screw plug.

Note when fitting: When assembling tighten the screw plug to the prescribed torque rating (see Technical Data).

Remove soft metal sealing washers from the end bolts of the damper.

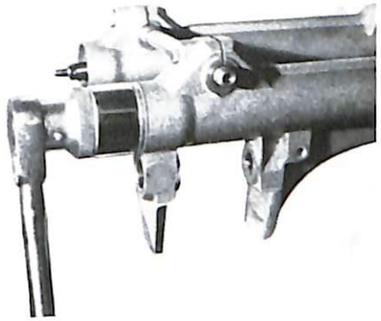

Note when fitting: Always use new sealing washers for re-assembly.

Lift out circlip on the damper nozzle.

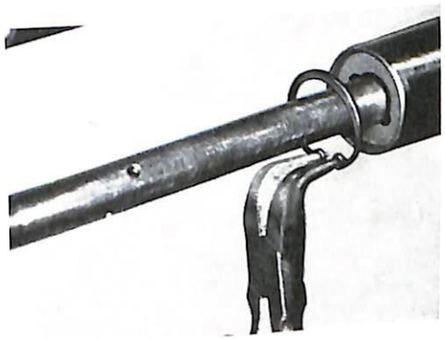

Remove the floating damper nozzle (consisting of two threaded rings and damper ring) with a suitable tool (Seeger circlip pliers).

Note tightening torque when fitting (see Technical Data).

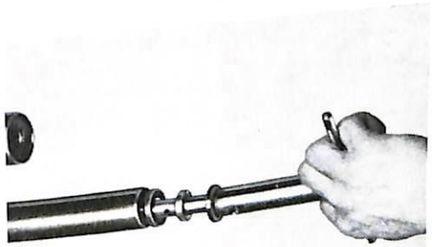

Withdraw the damper with plastic stop and carrier springs **downward.**

Note when fitting: When refitting the complete damper unit use the BMW 31 4 700 assembly sleeve to protect the plunger rings.

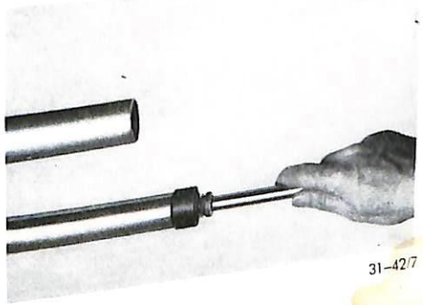

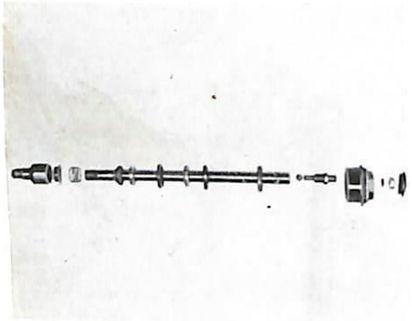

Check telescopic fork measurements – 31 42 009.

Clamp the complete damper at the hexagon of the end bolt and unscrew the spring seating on the top of the damper tube.

Remove in sequence: spring seating with plunger rings, damper valve and valve spring.

Remove ball valve: clamp the damper tube at the damper stop carefully between soft metal jaw pads and unscrew the end bolt. Take out the thrust spring and ball.

■

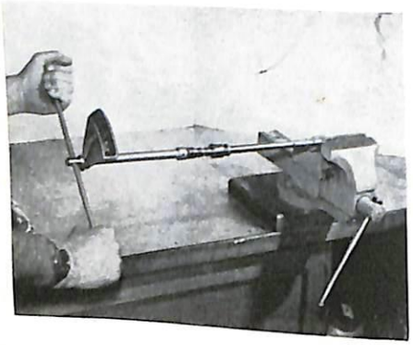

Note when fitting: Clamp the damper tube at the end bolt hexagon and use a torque wrench on the spring seating hexagon to tighten both screw couplings to the prescribed torque rating (see Technical Data).

Fill 280 cc. of the prescribed grade of oil (see Technical Data) in each fork column of the assembled fork unit and depress the fork strongly 4–5 times to allow any air to escape.

■

Note when fitting: If the lower fork yoke is to be renewed it is necessary for correct installation of the stand tube for the lower and upper fork yokes to be fitted in the frame complete together with preset steering bearings (with slotted nut and centering nut tightened). Only then are the fork stand tubes pushed through the lower fork yoke to come into full contact with the upper fork guide.

Tighten the clamping screws for fastening the stand tubes to the prescribed tightening torque (see Technical Data).

If only one single fork stand tube is renewed, the exact fitting height can be taken from the opposite stand tube.

■

31 42 103 Telescopic forks – stripping and assembling (1981 models)

Clamp the fixed fork tube into the vice, using wood block clamp BMW No. 31 4 600 (arrow).

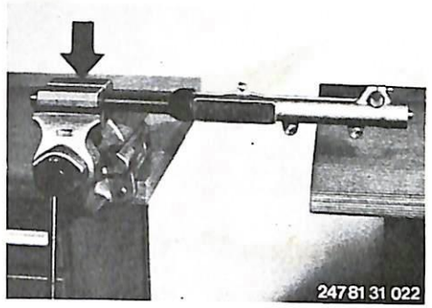

■

Unscrew the Allen screw holding the damper in the slider tube, and pull off the tube.

Note: hold with the quick-release axle while unscrewing.

For tightening torque, see Specifications.

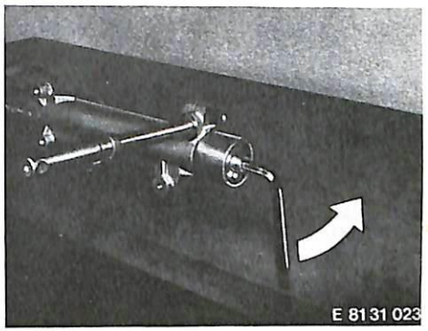

■

Pull damper guide (1) off damper (2).

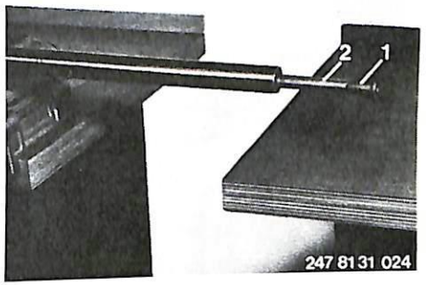

■

Remove the circlip with Seeger circlip pliers, and pull the complete damper out of the fixed fork tube.

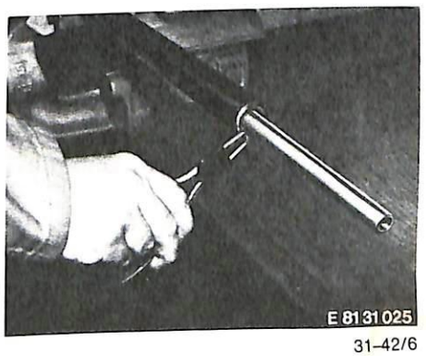

■

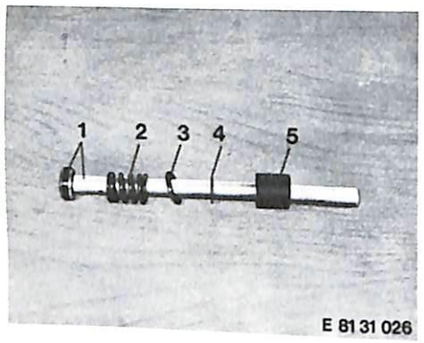

1 Piston with damper tube
2 Coil spring
3 Perforated disc
4 Distributor disc
5 Valve housing

■

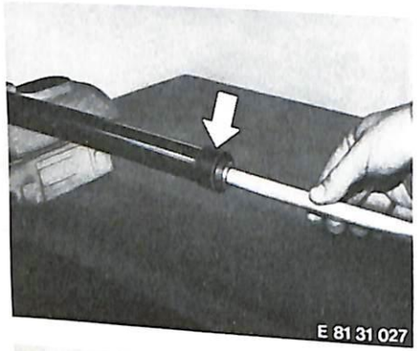

When installing the damper in the fixed tube, use guide sleeve BMW No. 31 4 720 (arrow) to compress the piston ring.

■

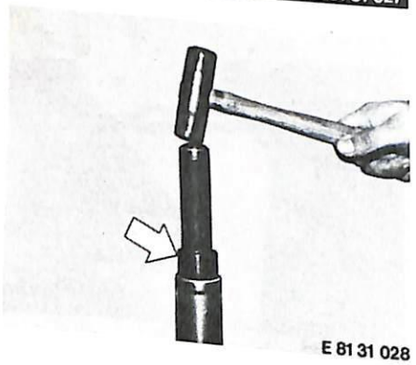

Carefully lever the sealing ring out of the slider tube with a screwdriver. Drive in the new sealing ring with hand grip BMW No. 00 5 500 and drift BMW No. 31 4 650 (arrow).

■

31 42 321 Taper roller bearings – removing and installing

Remove (install) telescopic fork – 31 42 100.

Take the upper taper roller bearing out of the steering head. Pull out the outer bearing races using Kukko puller BMW No. 00 5 560 and support ring BMW No. 31 4 800 (arrow).

■

Pull in the upper and lower outer taper roller bearing races with cup washer and Allen screw (3) one after the other using the spindle of the frame reference gauge (1) with spacer BMW No. 31 4 820 (2), a shim washer and hex nut (3).

■

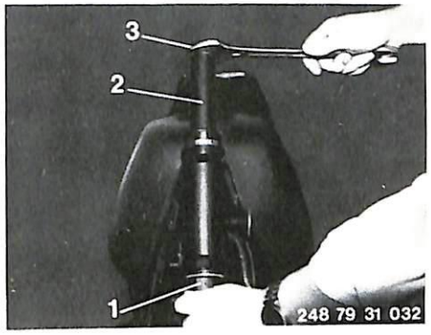

To renew the lower taper roller bearing, heat the lower fork guide to approx. 100° C (212° F), force through the guide tube downwards and insert again immediately.

Note: Mark (paint or punch mark) the guide tube and fork bridge – position of slot for thiefproofing lock.

Heat the bearings to approx. 80° C (176° F) for assembly.

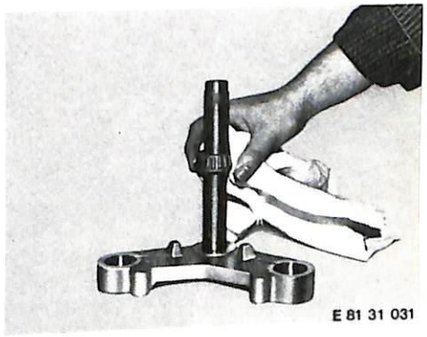

Troubleshooting – telescopic forks

Fault	Cause	Remedy
Response moment too high (stiction)	Trapped stresses in forks	Release axle clamp bolt and fully compress the forks a few times
Weak damping	Incorrect oil level (too high or too low)	Check and correct oil level
Rattling sound when a rapidly repeated series of shocks occurs	Excessive play at valve housing	Install a shim washer between the Seeger circlip and the valve housing

32 Steering

Specifications		Page 32- 0/3
Specifications (1979 models)		32- 0/4
Specifications (1981 models)		32- 0/5
32 00 454	Steering - adjusting	32-00/1
32 71 000	Handlebar - removing and installing	32-71/1
32 73 030	Throttle cable - removing and installing	32-73/1
32 73 030	Throttle cable - removing and installing (1981 models)	32-73/1

Steering

Technical Data

Model	R 60/7	R 75/7	R 80/7	R 100/7	R 100 S	R 100 RS
Steering lock	42° to each side					35°
Width of handlebar mm(in)	600 (23.6)					548 (21.6)
Width of US handlebar version mm(in)	680 (26.8)					548 (21.6)
Handlebar tube diameter mm(in)	22 (0.87)					
Steering damper (R 100 RS)	hydraulic, adjustable in 2 stages					

Tightening torque Nm (lb. ft) + friction value Ncm

Cap nut for telescopic fork	120 . . . 130 Nm	(88 . . . 96 lb ft)
Steering bearing		350 ± 20 Ncm

All remaining screws, bolts and nuts are to be tightened in accordance with the customary values recommended in the manufacturers' tables or in accordance with the latest BMW Standard Specification 60002.0

Steering

Specifications – '79 models

Model	R 80/7	R 100 T	R 100 S	R 100 RT	R 100 RS
Steering lock	42° to each side			35	
Width of handlebar mm (in)	600 (23.6)			690 (26.8)	548 (21.6)
Width of US handlebar version mm (in)	680 (26.8)			690 (26.8)	548 (21.6)
Handlebar tube diameter mm (in)	22 (0.87)				
Steering damper (R 100 RS)	hydraulic, adjustable in 2 stages				

Tightening torque Nm (lb. ft) + friction value Ncm

Cap nut for telescopic fork	120 . . . 130 Nm (88 . . . 96 lb. ft)
Steering bearing	350 ± 20 Ncm

All remaining screws, bolts and nuts are to be tightened in accordance with the customary values recommended in the manufacturers' tables or in accordance with the latest BMW Standard Specification 60002.0

11.78 Addition

11.79 Addition

Steering

Specifications (1981 models)

Model	R 100	R 100 CS	R 100 RT	R 100 RS
Steering lock angle	42° to each side		35°	
Handlebar width mm (in)	600 (23.6)		690 (27.2)	548 (21.6)
Handlebar width, US models mm (in)	680 (26.8)		690 (27.2)	548 (21.6)
Handlebar tube diameter mm (in)	22 (0.87)			
Steering damper			2-stage hydraulic adjustment	

Tightening torques Nm (ft. lb)

Cap nut for telescopic forks	120 (88)
Steering bearings	zero play

All other bolts and nuts are to be tightened as shown in the manufacturers' tables or on the latest BMW 60002.0 standards sheet.

Left handlebar grip (1981 models)

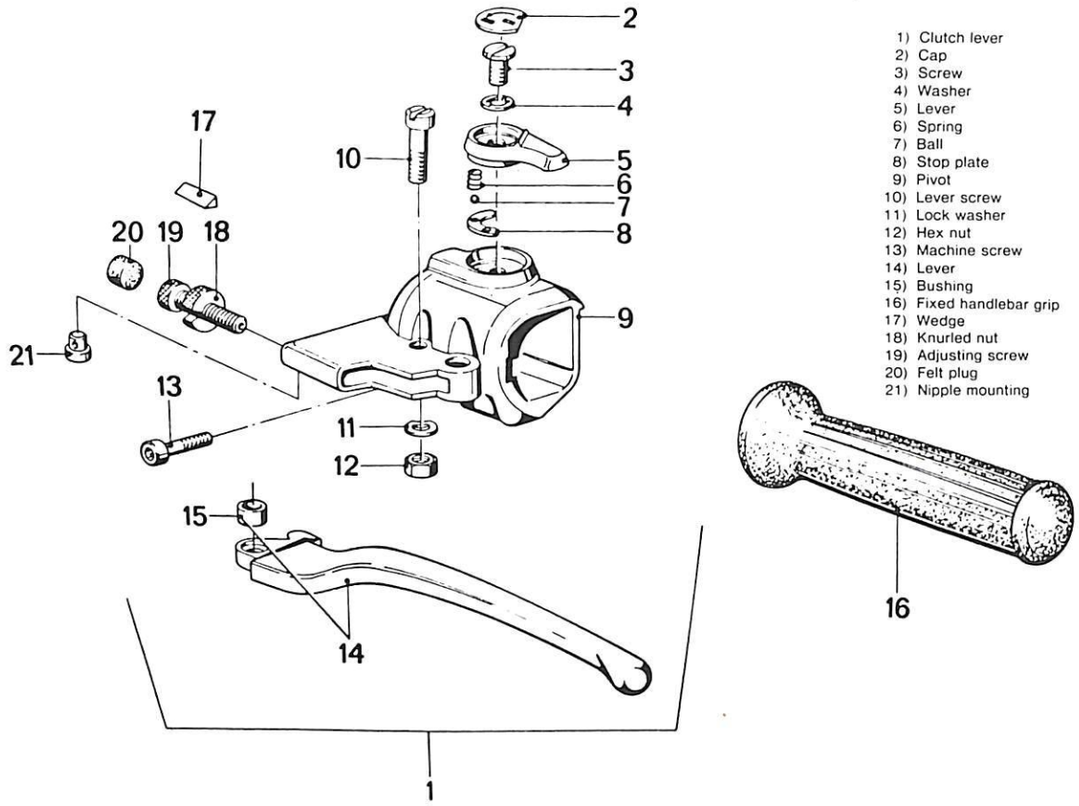

1) Clutch lever
2) Cap
3) Screw
4) Washer
5) Lever
6) Spring
7) Ball
8) Stop plate
9) Pivot
10) Lever screw
11) Lock washer
12) Hex nut
13) Machine screw
14) Lever
15) Bushing
16) Fixed handlebar grip
17) Wedge
18) Knurled nut
19) Adjusting screw
20) Felt plug
21) Nipple mounting

Right handlebar grip (1981 models)

1) Hydraulic brake assembly
2) Lever
3) Hex nut
4) Washer
5) Screw
6) Twistgrip tube
7) Rubber grip
8) Screw
9) Cover
10) Cam
11) Housing
12) Plunger
13) Lock ring
14) Fluid tank
15) Flexible diaphragm
16) Washer
17) Cover
18) Hex bolt
19) Machine screw
20) Serrated washer
21) Plug
22) O-ring
23) Cylinder with tank
24) Screw
25) Wedge
26) Knurled screw
27) Plug
28) Sleeve

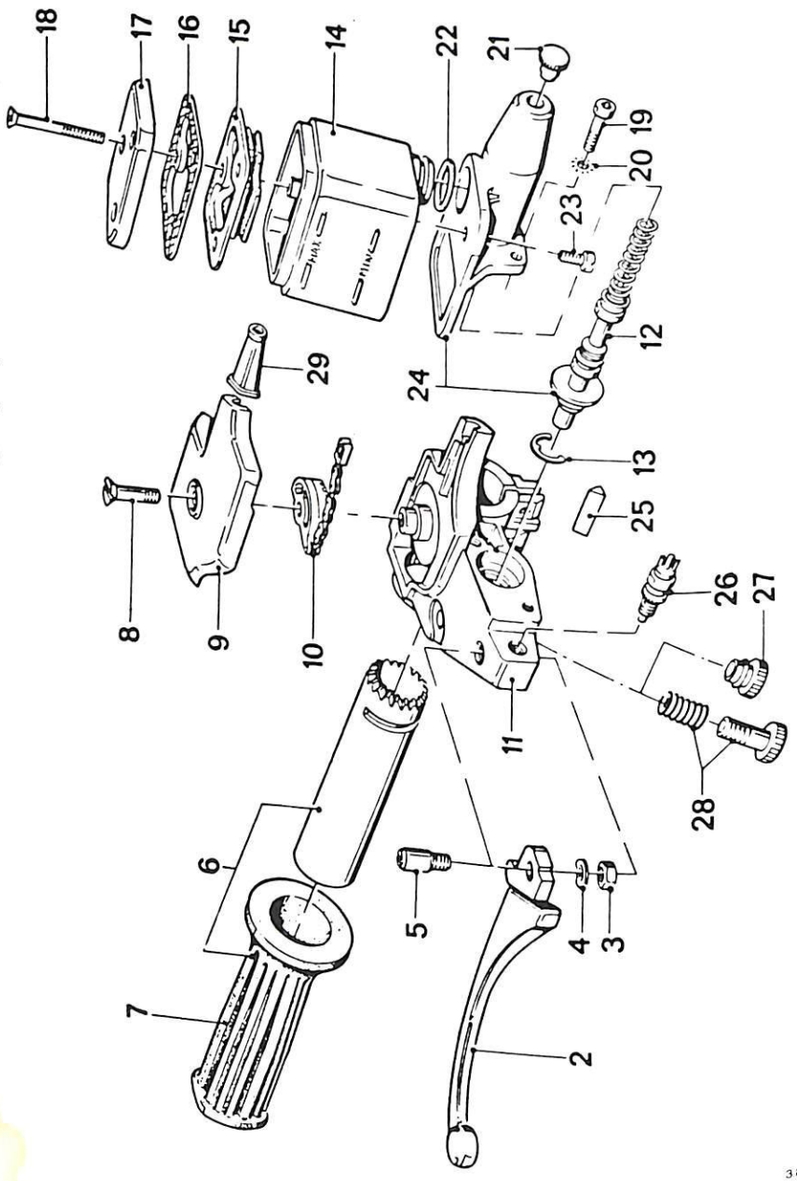

3.82 Addition

32 00 454 Steering – adjusting

Set the hydraulic steering damper to position "0". Slacken off the screw at the star handle, pull off the handle and detach the crash pad.

Push the sealing sleeves for the integral cockpit fairing down the forks.

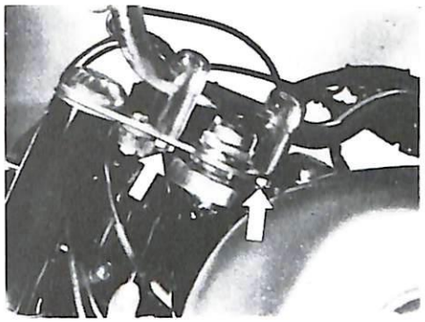

Slacken the centering nut and set the bearings to zero play by turning the slotted nut with hook wrench BMW No. 31 4 870. Relieve trapped stresses in the bearings by means of light blows on the centering nut.

When tightening the centering nut, prevent the slotted nut from turning.

When installing: tighten the centering nut with hex ring wrench BMW No. 31 4 850.

For tightening torque, see Specifications.

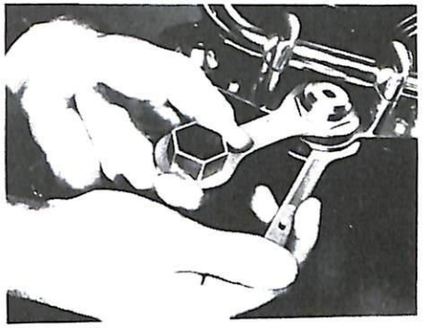

If the steering head bearings are correctly adjusted, the handlebars should just fall round to the full right lock position when the motorcycle is on its stand.

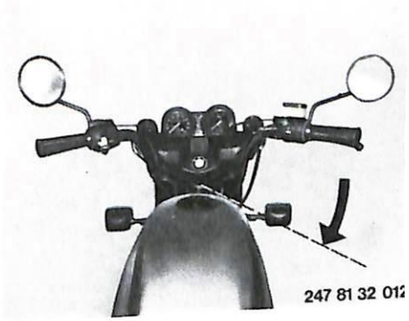

3.82 Alteration

32 71 000 Handlebars – removing and refitting

Disconnect the battery earth (ground) lead.

Remove the Phillips-head screw from the star grip and lift off the star grip and impact-absorbing pad.

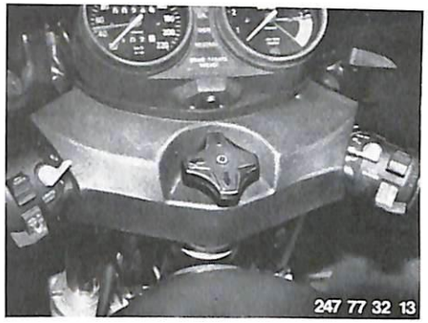

■

Remove two nuts each with spring washers from the handlebar clamp mounts (arrows).

Lay aside the handlebar with instruments and control cables on the tank on a suitable soft underlay.

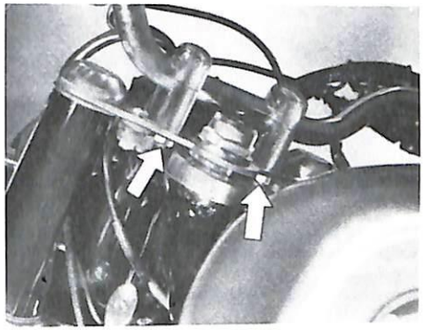

■

Unscrew the right-hand hexagonal socket head bolt (arrow) on the housing for throttle twist grip and brake lever and draw off the housing as a complete unit.

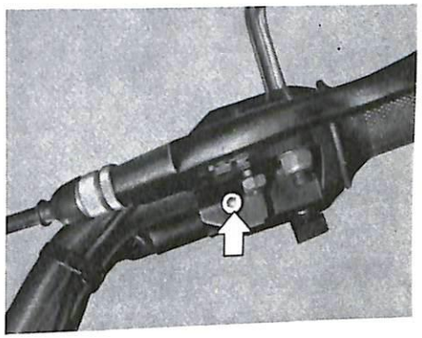

■

Remove left handlebar grip by blowing through handlebar tube from right with compressed air. Unscrew socket head bolt (arrow) from housing and withdraw assembly from handlebar tube.

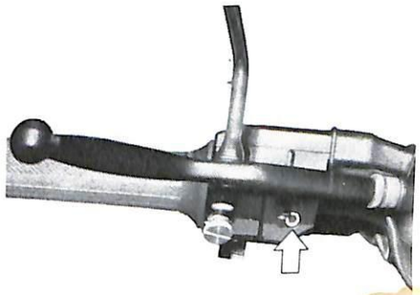

■

32 73 030 Throttle cable – removing and refitting

Push back the splash guard cap 1 and unscrew cover 2.

Disconnect the throttle cable.

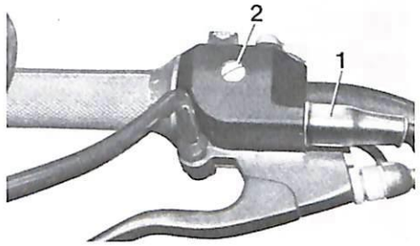

Note when fitting: Before assembly grease the adjusting cam and toothing on the throttle grip. When refitting care must be taken to ensure that slot end "a" in the throttle grip coincides with the rear end of recess "b" in the grip. Thread the lower control cable through the double nipple and fit, together with the tension chain and adjusting cam, in the grip so that the "c" and "d" markings are opposite each other on the cam and the grip. Fit the upper throttle cable in the double nipple. Replace cover and at the same time pull back the upper throttle cable sleeve sufficiently to allow the throttle cable end sleeve to engage in its seat in the cover recess. Screw down the cover and push on the splash guard cap. Only if this procedure is followed the full functional travel of the throttle cables is ensured.

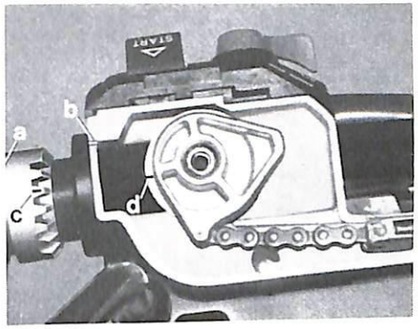

Fuel tank – remove and refit (16 11 030).

R 60/7

Unscrew the cover from the carburetor housing and remove with spring and throttle valve.

Disconnect the throttle cable.

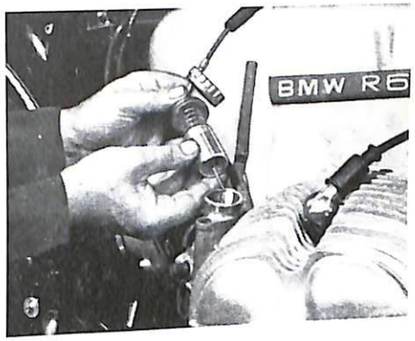

R 75/7 – R 100 RS

Unscrew Bowden cable adjusting screw (arrow) on the carburetor cover. Disconnect the control cable with nipple at the throttle flap lever

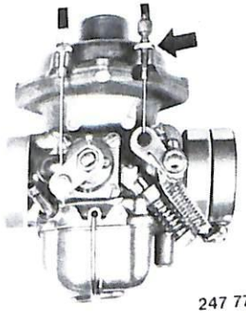

32 73 030 Throttle cable – removing and installing (1981 models)

Remove the fuel tank – 16 11 030.

Push back the moisture-seal cap on the cable, unscrew the throttle cable mechanism cover and disconnect the cable from the chain (arrow).

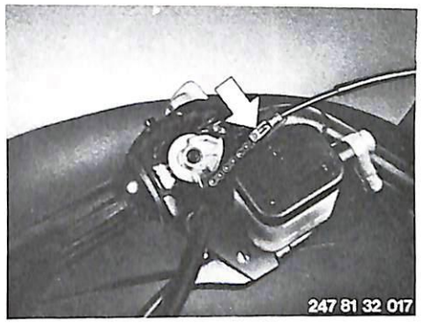

■

When installing: grease the teeth and the cam in the twistgrip before assembly. Make sure that the mark on the teeth at the twistgrip is aligned with the mark on the cam.

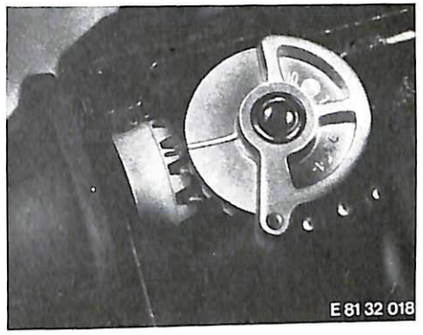

■

Slacken off the locknut (1) on the adjusting screw at the junction block, and tighten the adjusting screw fully.

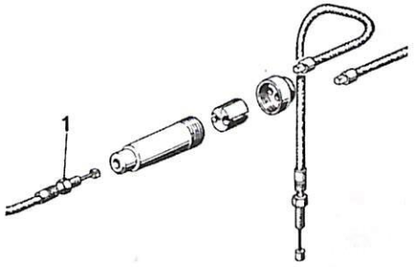

■

Turn the sleeve of the junction block (1), holding the knurled section (2) firmly.

Disconnect the cables from the junction block (arrow).

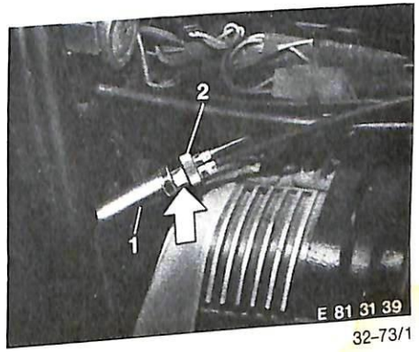

■

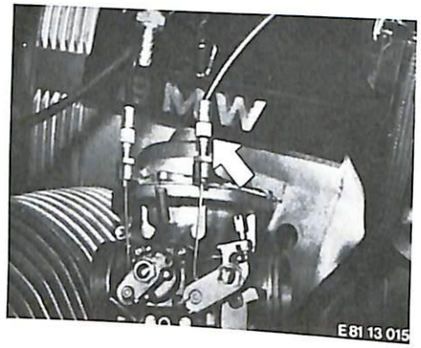

Slacken the locknut on the adjusting screw at the carburettor and remove the screw (arrow) from the carburettor body. Detach the cable from the throttle control.

Note: regulating engine idle speed and mixture – 13 00 004.

Important: to make the illustration clearer, the carburettor has been detached from the cylinder head and turned round so that the opposite side is visible.

■

33 Rear wheel drive and suspension

Specifications		Page 33– 0/3
Specifications (1979 models)		33– 0/5
Specifications (1981 models)		33– 0/7
33 10 050	Final drive – removing and installing	33–10/1
33 10 113	Final drive – stripping and assembling	33–10/3
33 12 051	Bevel drive pinion and crown wheel – removing and installing	33–12/1
33 17 350	Rear swinging fork – removing and installing	33–17/1
33 17 381	Taper roller bearings for rear swinging fork – renewing	33–17/2
33 52 100	Spring-damper strut – removing and installing	33–52/1
33 52 021	Damper – removing and installing	33–52/1
	Troubleshooting – rear wheel drive	33–52/3

Final Drive

Technical Data

Model	R 60 7	R 75 7	R 80 7	R 100 7	R 100 S	R 100 RS
Toothing system	Klingelnberg (Palloid) helical					
Number of teeth	11 : 37 * 9 : 32	10 : 32	10 : 32 ** 11 : 37	11 : 34	11 : 32	11 : 33
Transmission ratio	1 : 3.36 * 1 : 3.56	1 : 3.2	1 : 3.2 ** 1 : 3.36	1 : 3.09	1 : 2.91	1 : 3.0
Special version: Number of teeth		11 : 37	11 : 37	10 : 32	11 : 33	11 : 32
Special version: Transmission ratio		1 : 3.36	1 : 3.36	1 : 3.3	1 : 3.0	1 : 2.91*
Type of oil: initial filling	Brand-name running in hypoid gear oil SAE 90					
After the first oil change, over 5° C (41° F)	Brand-name hypoid gear oil SAE 90					
below 5° C (41° F)	Brand-name hypoid gear oil SAE 80					
Filling quantity, ltr (Imp pints)	0.25 (0.44/0.26)					
Tooth backlash, mm(in)	0.15 . . . 0.20 (0.006 . . . 0.008)					
Lateral play in crown wheel	Zero play (without seal)					
Rear wheel suspension	Long swinging arm and spring struts with triple adjustment and double-acting hydraulic shock absorbers.					
Spring travel, mm(in)	125 (4.92)					
Maximum length, mm(in)	316±2 (12.44±0.08)					
Minimum length, mm	216±2 (8.50±0.08)					
Shock absorber test						
Test stroke, mm(in)		25 (0.98)	75 (2.95)	50 (1.97)		
Test speed min^{-1}		100	100	382		
Tension stage, kp (lb)		30±5 (66±11)	58±5 (128±11)	80±10 (176±22)		
Compression stage, kp (lb)		5±3 (11±6.6)	9±3 (19.8±6.6)	28±5 (62±11)		

* 1978 model
** version with low-compression engine

Rear Axle

Technical Data

Model	R 60 7	R 75 7	R 80 7	R 100 7	R 100 S	R 100 RS
Bearing spring Fitting length, mm(in)	199.1 (7.84)					
Length relaxed, mm(in)	251 (9.88)					
Spring outer diameter, mm(in)	49.6 (1.953)					
Spring inner diameter, mm(in)	41.8 + 0.3 (1.646 + 0.012)					
Wire thickness, mm(in)	7.5 ± 0.04 (0.2953 ± 0.0016)					
Spring compression at 120.2 mm (4.732 in) spring travel, kp mm²	105					
Long swinging arm Type of oil over 5 C (41 F) below 5 C (41 F)	Brand-name hypoid gear oil SAE 90 Brand-name hypoid gear oil SAE 80					
Filling capacity, ltr (Imp. pints)	0.15 (0.26 0.16)					

Tightening torques Nm (ft.lb)

Nut on drive pinion	150 ... 15 (111 ... 11)	Oil drain plug rear wheel drive	23 ... 26 (17.0 ... 19.2)
Threaded ring on drive pinion	100 ... 120 (73.8 ... 88.5)	Oil filler plug on swing arm	14 (10.3)
Oil filler plug on rear wheel drive	28 ... 31 (20.6 ... 22.9)	Oil drain plug on swing arm	14 ... 16 (10.3 ... 11.8)
Bearing bolts on swing arm	10 ... 12 (7.4 ... 8.8)	Nuts on drive housing	18 ... 21 (13.3 ... 15.5)
Shock absorber rod on spring strut eyelet, top	34 ... 39 (25.1 ... 28.8)	Locknut for swing arm bearing bolts	100 ... 120 (73.8 ... 88.5)
		Clamp screw for rear spindle	14 ... 18 (10.3 ... 13.3)

All other bolts, screws and nuts are to be tightened in accordance with the customary values indicated in the manufacturers' tables or according to the latest BMW Standard Specification 60002.0

Final Drive

Specifications – '79 models

Model		R 80/7	R 100 T	R 100 S	R 100 RT	R 100 RS
Toothing system		Klingelnberg (Palloid) helical				
Number of teeth		10 : 32 **11 : 37	11 : 33	11 : 32	11 : 33	
Transmission ratio		1 : 3,2 **1 : 3,36	1 : 3,0	1 : 2,91	1 : 30	
Special version:	Number of teeth	11 : 37	11 : 32	11 : 33	11 : 32	
	Transmission ratio	1 : 3,36	1 : 2,91	1 : 3,0	1 : 2,91	
Type of oil: initial filling		Brand-name running in hypoid gear oil SAE 90				
After the first oil change,	over 5° C (41° F) below 5° C (41° F)	Brand-name hypoid gear oil SAE 90 Brand-name hypoid gear oil SAE 80				
Filling quantity, ltr (Imp pints/US quants)		0.25 (0.44/0.26)				
Tooth backlash, mm (in)		0.15 ... 0.20 (0.006 ... 0.008)				
Lateral play in crown wheel		Zero play (without seal)				
Rear wheel suspension		Long swinging arm and spring struts with triple adjustment and double-acting hydraulic shock absorbers.				
Spring travel, mm (in)		125 (4.921)				
Maximum length, mm (in)		316 ± 2 (12.44 ± 0.078)				
Minimum length, mm (in)		216 ± 2 (8.50 ± 0.078)				
Shock absorber test Test stroke, mm (in) Test speed min⁻¹ Tension stage, kp (lb) Compression stage, kp (lb)			25 (0.984) 100 30 ± 6 (66 ± 13.2) 5 ± 3 (11 ± 6.6)	75 (2.925) 100 62 ± 7 (136.4 ± 15.4) 9 ± 3 (19.8 ± 6.6)	50 (1.950) 382 88 ± 10 (176 ± 22) 28 ± 5 (62 ± 11)	

** version with low-compression engine

Rear Axle

Specifications – '79 models

Model	R 80/7	R 100 T	R 100 S	R 100 RT	R 100 RS
Bearing spring Fitting length, mm (in)	199.1 (7.838)				
Length relaxed, mm (in)	251 (9.881)				
Spring outer diameter, mm (in)	49.6 (1.952)				
Spring inner diameter, mm (in)	41.8+0.3 (1.645+0.0118)				
Wire thickness, mm (in)	7.5±0.04 (0.2952±0.0015)				
Spring compression at 120.2 mm (4.732 in) spring travel, kp/mm²	105				
Long swinging arm Type of oil over 5° C (41° F) below 5° C (41° F)	Brand-name hypoid gear oil SAE 90 Brand-name hypoid gear oil SAE 80				
Filling capacity, ltr (Imp. pints/US quarts)	0.15 (0.26/0.16)				

Tightening torques Nm (ft. lb)

Nut on drive pinion	150+15 (111...11)	Oil drain plug rear wheel drive	23...26 (17.0...19.2)
Threaded ring on drive pinion	100...120 (73.8...88.5)	Oil filler plug on swing arm	14 (10.3)
Oil filler plug on rear wheel drive	28...31 (20.6...22.9)	Oil drain plug on swing arm	14...16 (10.3...11.8)
Bearing bolts on swing arm	10...12 (7.4...8.8)	Nuts on drive housing	18...21 (13.3...15.5)
Shock absorber rod on spring strut eyelet, top	34...39 (25.1...28.8)	Locknut for swing arm bearing bolts	100...120 (73.8...88.5)
		Clamp screw for rear spindle	14...18 (10.3...13.3)

All other bolts, screws and nuts are to be tightened in accordance with the customary values indicated in the manufacturers tables or according to the latest BMW Standard Specification 60002 0.

Rear wheel drive and suspension

Specifications (1981 models)

Model		R 100	R 100 CS	R 100 RT	R 100 RS
Tooth contact pattern		Klingelnberg (Palloid) spiral bevel			
Number of teeth		11:33	11:32	11:33	
Ratio		1:3.0	1:2.91	1:3.0	
Special version:	Number of teeth	11:32	11:33	11:32	
	Ratio	1:2.91	1:3.0	1:2.91	
Oil grade (initial filling)		Brand-name running-in hypoid gear oil, SAE 90, API class GL 5			
After first oil change	above 5° C (41° F) below 5° C (41° F)	Brand-name hypoid gear oil, SAE 90 Brand-name hypoid gear oil, SAE 80 API class GL 5			
Oil content l (Imp. pints, US quarts)		0.35 (0.62, 0.37) max., up to level check plug			
Tooth backlash mm (in)		0.08...0.14 (0.003...0.006)			
Crownwheel side play mm (in)		0.1 (0.004)			
Rear suspension:		Long-arm swinging fork with 3-position spring struts incorporating double-acting hydraulic dampers			
Suspension travel mm (in)		125 (4.92)			
Max. length mm (in)		316 ± 2 (12.44 ± 0.08)			
Min. length mm (in)		216 ± 2 (8.50 ± 0.08)			
Damper test: Test stroke mm (in) Speed min⁻¹ Traction phase kp (lb.f) Compression phase kp (lb.f)		25 (0.98) 100 30 ± 6 (66 ± 13) 5 ± 3 (11 ± 7)	75 (2.95) 100 62 ± 7 (137 ± 15) 9 ± 3 (20 ± 7)	50 (1.97) 382 88 ± 10 (194 ± 22) 28 ± 5 (62 ± 11)	

Specifications (1981 models)

Model	R 100	R 100 CS	R 100 RT	R 100 RS
Suspension springs – installed length mm (in)	199.1 (7.84)			
Relaxed length mm (in)	251 (9.88)			
Extl. dia. of spring mm (in)	49.6 (1.95)			
Intl. dia. of spring mm (in)	41.8 + 0.3 (1.65 + 0.01)			
Wire thickness mm (in)	7.5 ± 0.04 (0.295 ± 0.002)			
Spring force at 120.2 mm (4.73 in) spring travel kp (lb.f)/mm²	105 (231.5)			
Long-arm swinging fork				
Oil grade – above 5 °C (41 °F)	Brand-name hypoid gear oil, SAE 90			
– below 5 °C (41 °F)	Brand-name hypoid gear oil, SAE 80		API class GL 5	
Oil content l (Imp. pint, US quart)	0.15 (0.26, 0.16)			

Tightening torques Nm (lb.ft)

Final drive oil drain plug	25.5 (18.8)	Nut on input pinion	165 (122)
Swinging fork oil filler plug	screwed in but not over-tightened	Threaded ring in final drive casing	118 (87)
Swinging fork oil drain plug	15.7 (11.6)	Final drive oil level check screw	10 (7.4)
Nut for final drive cover	17.7 (13.1)	Swinging fork pivot pin	10 + 2 (7.4 + 1.5)
Spring strut lug at piston rod	38 + 2 (28.0 + 1.5)	Locknut for swinging fork pin	100 + 20 (74 + 15)
Twelve-sided nut for final drive housing/swinging fork mounting	47 (35)	Spring strut retaining bolts	35 + 5 (26 + 3.7)

All other bolts and nuts are to be tightened as shown in the manufacturers tabels or on the latest BMW 60002.0 standards sheet

Rear wheel drive

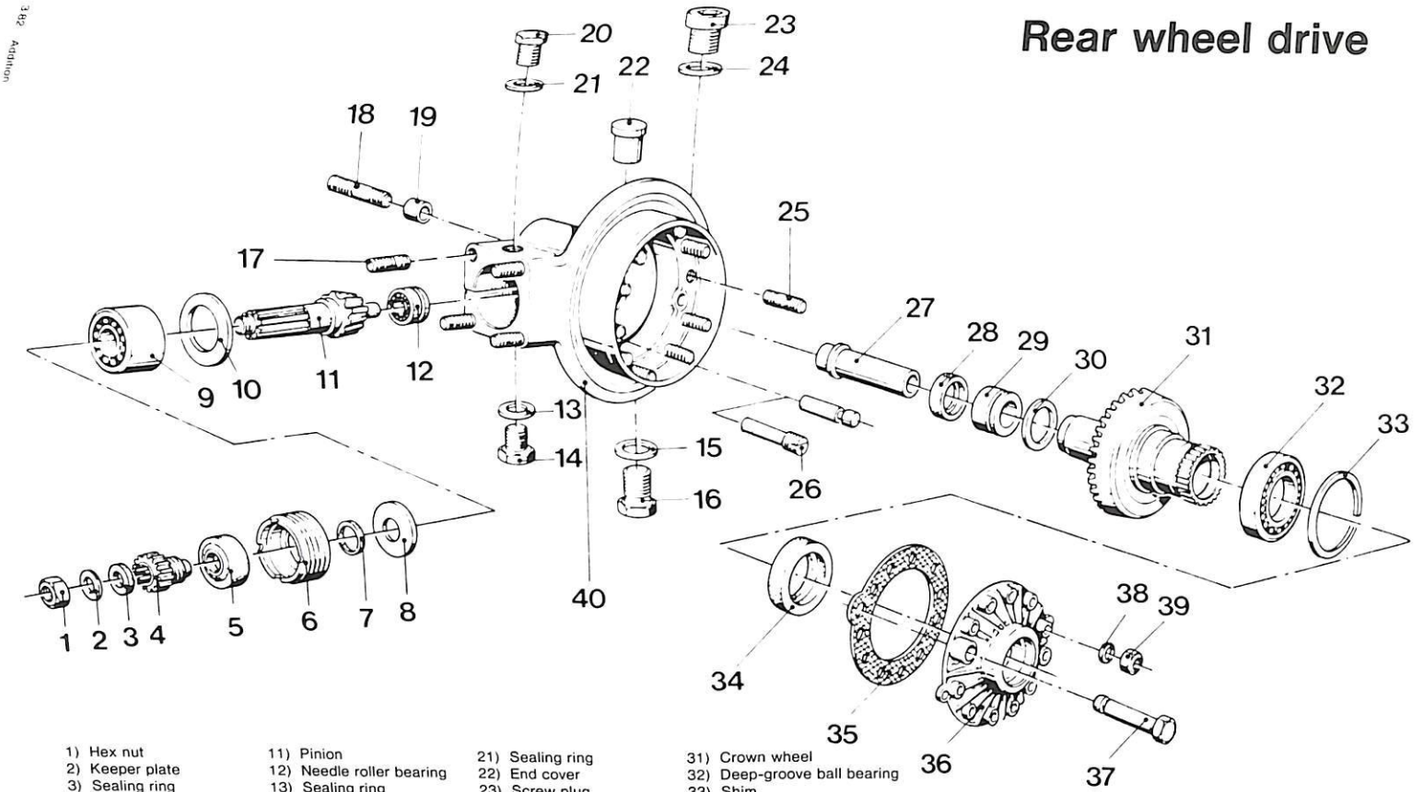

1) Hex nut
2) Keeper plate
3) Sealing ring
4) Coupling hub
5) Shaft sealing ring
6) Threaded ring
7) Spacer ring
8) Washer
9) Ball thrust bearing
10) Shim
11) Pinion
12) Needle roller bearing
13) Sealing ring
14) Screw plug
15) Sealing ring
16) Screw plug
17) Stud bolt
18) Stud bolt
19) Bushing
20) Screw plug
21) Sealing ring
22) End cover
23) Screw plug
24) Sealing ring
25) Stud bolt
26) Taper pin
27) Bushing
28) Shaft sealing ring
29) Needle roller bearing
30) Thrust ring
31) Crown wheel
32) Deep-groove ball bearing
33) Shim
34) Shaft sealing ring
35) Gasket
36) Housing cover
37) Pivot pin
38) Spring washer
39) Hex nut
40) Housing

33 10 050 Final drive – removing and installing

Remove (install) rear wheel – 36 30 320.

Place the motorcycle on its center stand and support it under the swinging fork pivots so that the rear wheel can revolve freely.

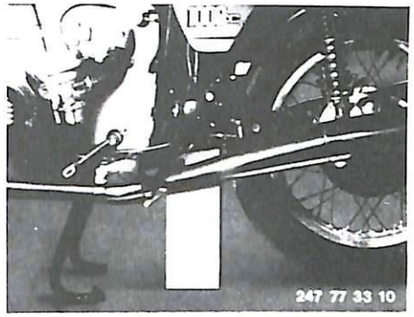

■

Unscrew and remove the right spring strut retaining bolt (arrow) and set aside carefully complete with the washer.

Remove screw (2) from the right swinging fork arm and allow the oil to drain out. Oil filter plug (1) should be unscrewed to permit the oil to drain out more quickly by venting the fork arm.

When installing: after re-assembling, add 0.25 liter (0.44 Imp. pint, 0.26 US quart) of oil (for correct grade of oil, see Specifications).

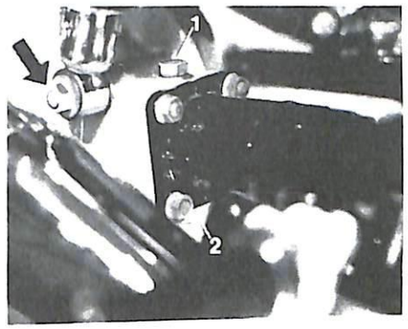

■

Unscrew the wing nut from the brake rod. Pull the brake rod off the pin on the lever. Remove the hollow pin from the lever, place it on the brake rod and secure with the wing nut.

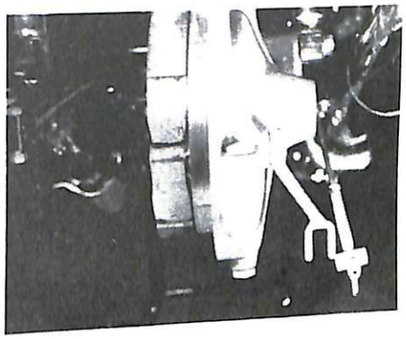

■

Loosen the upper spring strut retaining bolt and unscrew the 4 nuts with spring washers from the bolts securing the right swinging fork arm.

When assembling, only tighten these four nuts when the axle has been inserted through the final drive and the axle clamp.

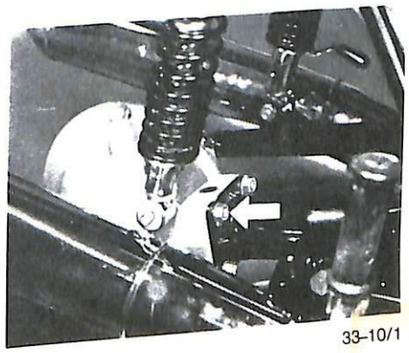

■

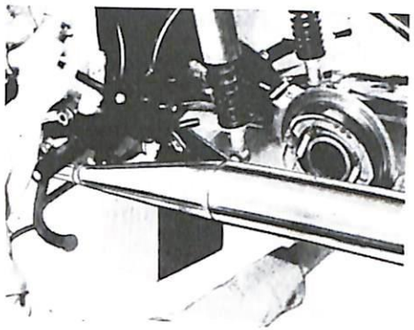

Pull the final drive away from the swinging fork and set it down carefully.

When installing: select a gear at the gearbox before attaching the final drive to the swinging fork and turn the propeller shaft until the splined coupling engages.

■

33 10 113 Final drive – stripping and assembling

Drain the oil from the final drive.

Remove (install) brake shoes – 34 21 150.

Remove brake lever and backplate.

(These two jobs are not needed if a disc brake is installed.)

Install the final drive in assembly stand BMW No. 33 1 600 (arrow).

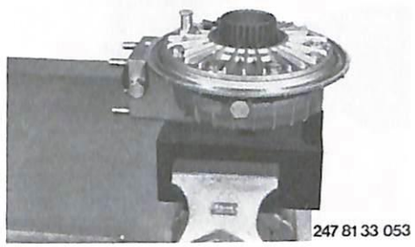

247 81 33 053

■

Unscrew the hex bolts from the cover. Heat the cover to app. 80° C (176° F) and force off with two M 5 x 30 mm bolts (arrows). Take out the oil trap plate.

When installing: Seal the cover with Loctite No. 573 or a paper gasket.

Push assembly sleeve BMW No. 33 1 000 through the shaft sealing ring in the housing cover, then place it on the input gear teeth of the crown wheel and press the cover on to the housing. Heat the cover to app. 80° C (176° F).

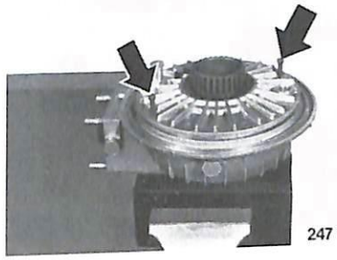

247 81 33 054

■

Drive out the shaft sealing ring with a drift from the cover. Force in the new sealing ring with drift BMW No. 33 1 850 and handle BMW No. 00 5 500.

Note: place the cover on the smooth side of the guide.

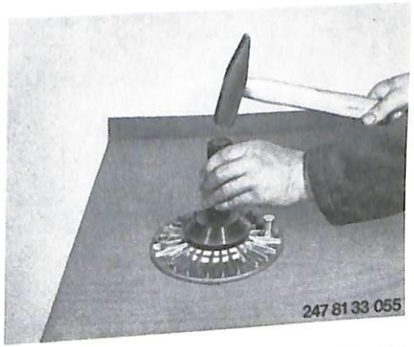

247 81 33 055

■

Separate the deep-groove ball bearing from the crown wheel by applying uniform blows of a soft metal drift through the holes provided in the crown wheel.

When installing: heat the deep-groove ball bearing to app. 100° C (212° F).

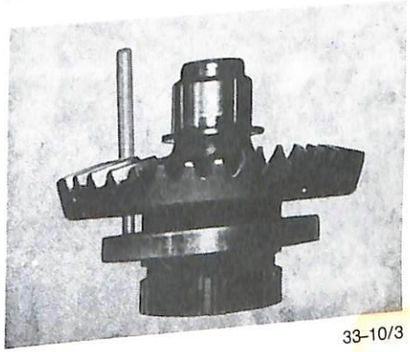

■

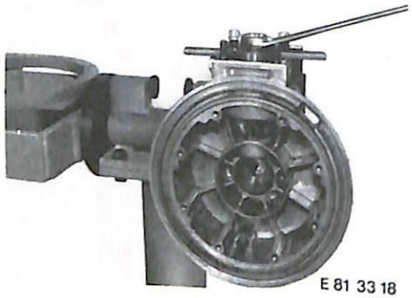

E 81 33 18

Position the assembly stand vertically. Unscrew the nut from the input pinion and pull off the washer with plastic ring and the pinion.

When installing: the nut is secured with Loctite 74; for tightening torque, see Specification.

■

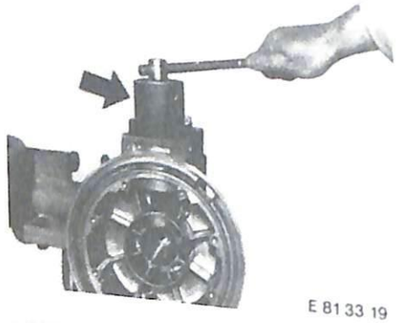

E 81 33 19

Unscrew and remove the threaded ring complete with shaft sealing ring, using pin wrench BMW No. 33 1 700 (arrow).

■

E 81 33 20

Drive the shaft sealing ring out of the threaded ring with a suitable drift.

Force in the new sealing ring with drift BMW No. 33 1 750 and handle BMW No. 00 5 500.

■

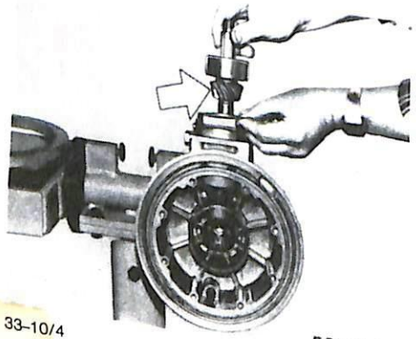

E 81 33 021

Heat the housing to app. 120° C (248° F), using a "Thermochrom" pin. Remove the input bevel pinion (arrow) with ball thrust bearing and shim.

■

Using Kukko 17 K puller, BMW No. 00 7 500, pull the ball thrust bearing off the input bevel pinion.

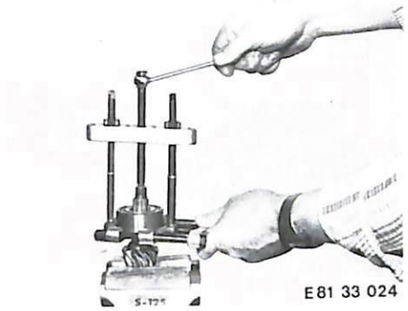

E 81 33 024

■

Renew the needle roller bearing for the pinion in the universal joint housing.

Unscrew and remove the screw (arrow) – on models up to 1979.

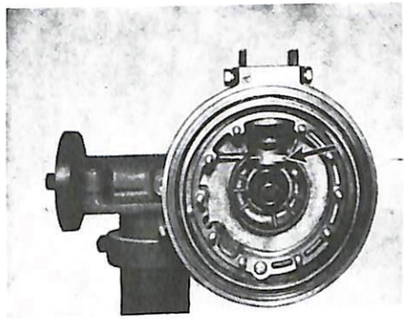

■

Heat the casing to app. 120° C (248° F). Pull out the needle roller bearing (from the input bevel pinion) with internal ball-bearing puller No. 400 151/T 2.

When installing: heat the casing to app. 120° C (248° F) and drive in the needle roller bearing for the pinion with a suitable drift.

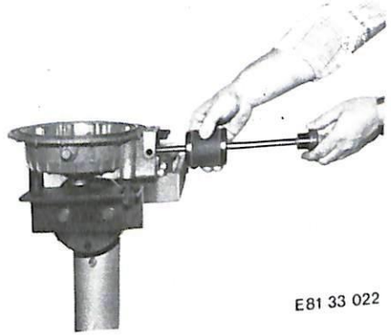

E 81 33 022

■

Alternatively, press the bearing in with Kukko internal puller No. 21/3 and support 22/1.

Do not damage the sealing face.

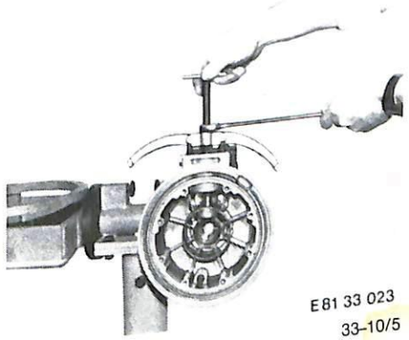

E 81 33 023

■

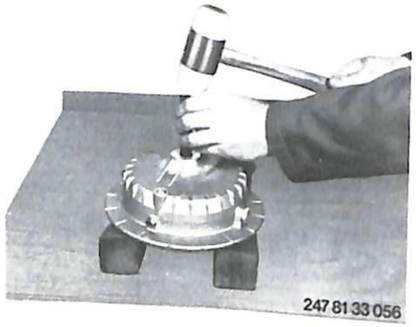
247 81 33 056

To renew the needle roller bearing for the crown wheel, heat the casing to app. 100° C (212° F). Place it on two wooden blocks with the cover side down and drive out the stub axle bushing with a 17.8 mm (0.7 in) drift.

■

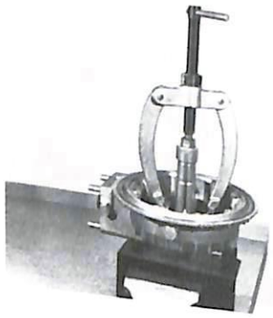
247 81 33 057

Pull out the needle roller bearing with Kukko puller BMW No. 00 8 560, holding the bearing at the lower edge.

When installing: always heat the casing to app. 100° C (212° F) before inserting the needle roller bearing and the stub axle bushing.

■

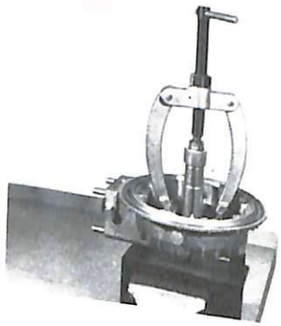
247 81 33 057

Pull out the radial sealing ring with Kukko puller BMW No. 00 8 551 and the support bridge from BMW No. 00 8 560.

■

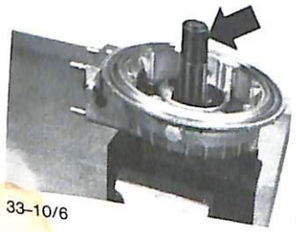
247 81 33 059

Press in the radial sealing ring with drift BMW No. 33 1 880 in conjunction with handle BMW No. 00 5 500; the open side of the sealing ring faces upwards.

■

Pull off the inner race of the needle roller bearing with the Kukko universal puller, BMW No. 00 7 500.

Use the 30 mm (1.18 in) spindle support (arrow).

Before assembling, heat the inner race to app. 120° C (248° F).

■

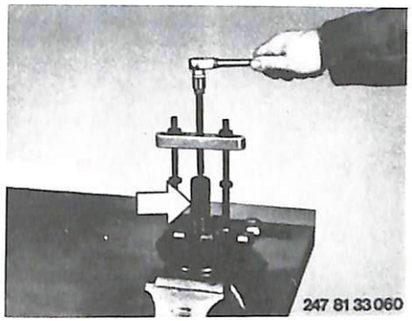
247 81 33 060

33 12 051 Drive (bevel) pinion and crown wheel – removing and installing

Strip (assemble) the final drive – 33 10 113.

Drive and crown wheels are matched together. Check to see that their numbers correspond (arrows).

During the assembly test procedure, tolerances are established which will result in smooth running and the correct tooth backlash, provided that numerically paired crown wheels and pinions are always used.

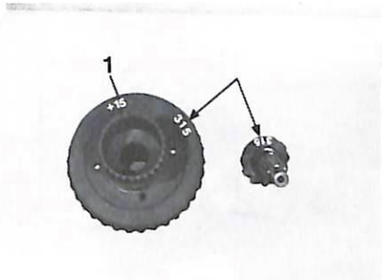

247 81 33 061

■

The basic size of the casing measured from the ball thrust bearing shoulder on the pinion to the center of the crown wheel shaft is 75.50 ± 0.05 mm (2.97 ± 0.002 in).

The basic size is not stamped on the casing. If the casing is of a different size, the two digits after the decimal point are marked on the inside as shown (arrow).

The basic size of the pinion is 77.50 mm (3.05 in). Any difference is marked on the crown wheel (see illustration above) with a + or – sign.

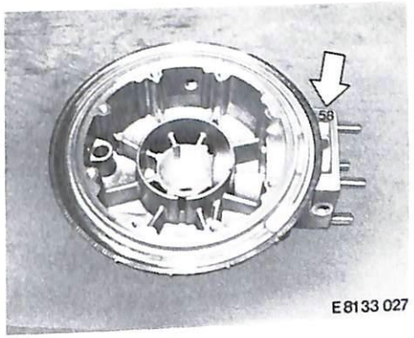

E 81 33 027

■

The thickness of the washer (arrow) between the ball thrust bearing shoulder and the seat in the casing is calculated by substracting the size of the casing from the basic size of the pinion (plus or minus the deviation marked on the crown wheel). If there is no deviation marked on the crown wheel and no measurement on the casing, then the basic sizes apply. In this case the size of the washer will be 77.50 – 75.50 mm = 2 mm (3.05 – 2.97 in = 0.080 in).
If a deviation of, for example, +15 is marked on the crown wheel the size of the washer will be 2.0 mm + 0.15 mm = 2.15 mm (0.080 + 0.006 in = 0.086 in).

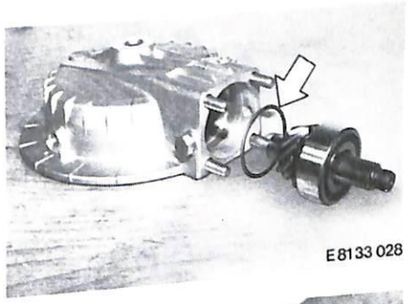

E 81 33 028

■

To obtain provisional tooth backlash, insert a bronze ring of sufficient thickness in the casing (arrow).

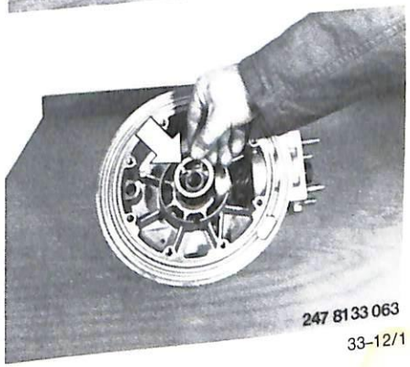

247 81 33 063

■

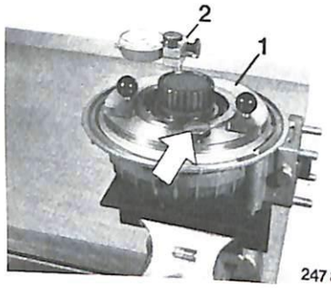

247 81 33 064

When adjusting tooth backlash use measuring device BMW No. 33 2 610.
With the crown wheel installed, place the measuring ring (1) and dial gauge holder (2) on the final drive casing and turn the knurled thumbscrew (arrow) to hold it in place.

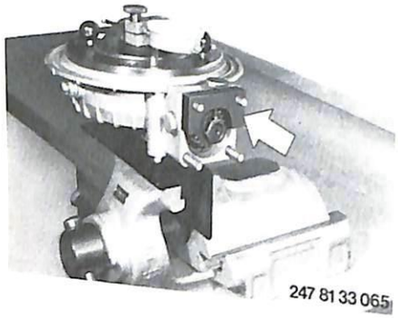
247 81 33 065

In order to measure tooth backlash with complete accuracy, the pinion drive must be held fast with locking device BMW No. 33 2 620 (arrow).

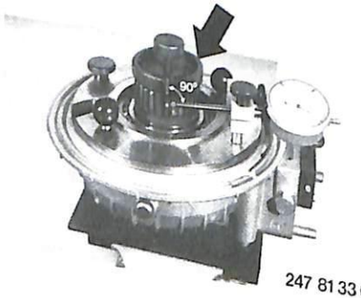

247 81 33 066

Clamp the measuring stop to the crown wheel in such a way that the gauge probe, when opposite marking (1), is at an angle of 90° to the stop. Turn the crown wheel lightly to and fro. Check tooth backlash at three points (at 120° intervals). Loosen the stopper and insert in turn into the segments between the studs.

See Specifications for tooth backlash.

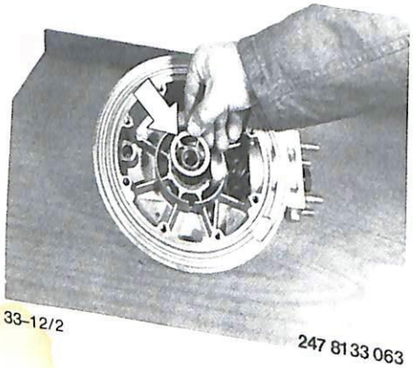
247 81 33 063

If tooth backlash is too small or too great, then a thicker or thinner bronze ring (arrow) must be inserted accordingly.

To check the tooth contact pattern, colour a few teeth of the drive wheel with engineer's blue or a light oil-bound paint. Install the crown wheel in the casing and turn it vigorously to and fro several times.

If the contact pattern looks like this (top picture), the drive wheel is too deep in the casing, and a wider spacer must be fitted.

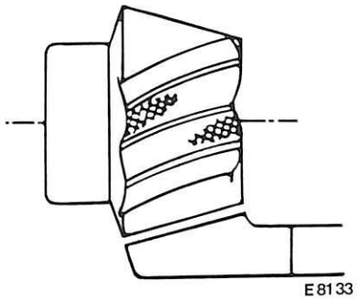
E 81 33 034

This contact pattern will then result.

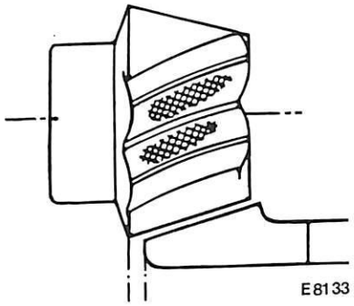
E 81 33 035

If the contact pattern looks like this, the drive wheel must penetrate deeper in the casing, so that a thinner spacer is necessary.

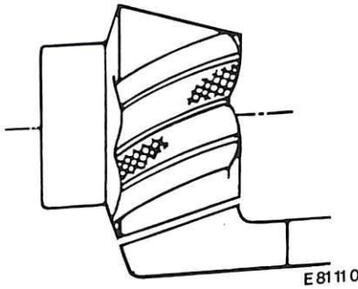
E 81 11 036

This contact pattern will then be obtained.

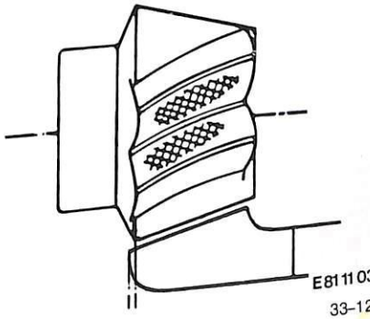
E 81 11 037

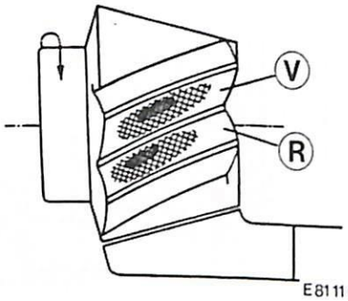

E 81 11 038

Correct contact pattern in off-load condition: The contact pattern is in the middle of the forward flank "V".

On the reverse flank "R", the contact pattern is nearer the wide end.

The teeth must NEVER touch at the narrow end!

■

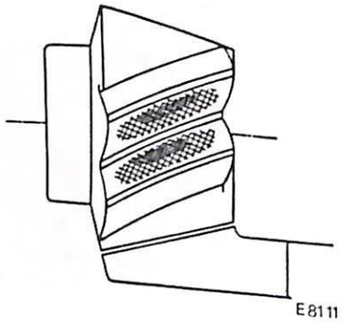

E 81 11 039

Under load the contact pattern then looks like this.

■

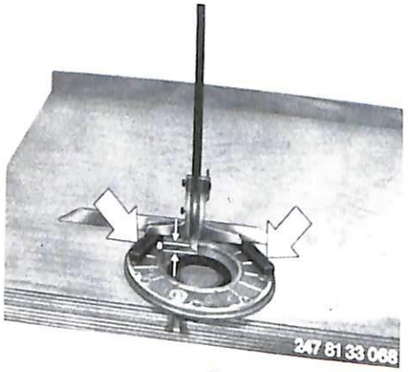

To adjust lateral play of the crown wheel, place the ring of the measuring device on the final drive casing. Measure distance "a" from the joint face of the cover to the ball bearing contact face, using depth gauge BMW No. 00 2 550 and the necessary intermediate spacers (arrows).

Measured distance	= 20.0 mm (0.787 in)
– spacer thickness	9.8 mm (0.386 in)
Dimension "a"	= 10.2 mm (0.401 in)

■

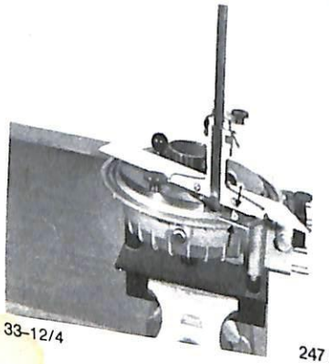

247 81 33 069

Using depth gauge BMW No. 00 2 550, determine distance "b".

Measurement 1: from measuring ring cutout to casing through joint face (distance I)

Measurement 2: from measuring ring to outer race of ball bearing (distance II)

Distance I – distance II = dimension "b".

■

Adjust side-play at crown wheel (up to 1979 models).

With a depth gauge and spacer if necessary, measure distance (a) from the bottom of the deep-groove ball bearing seat to the joint contact faces.

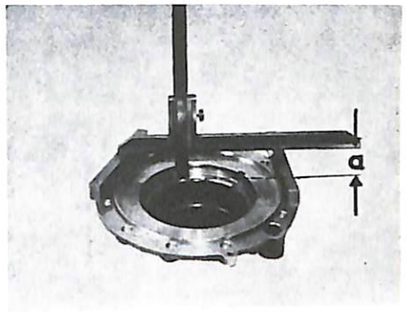

■

With no gasket on the universal joint housing joint face, measure distance (b) from the deep-groove ball bearing (at the crown wheel) to the joint face.

Insert suitable shims between the ball bearing and the seat base in the cover to eliminate play. The shim thickness needed is distance (a) minus distance (b), with an additional 0.1 mm (0.004 in) deducted.

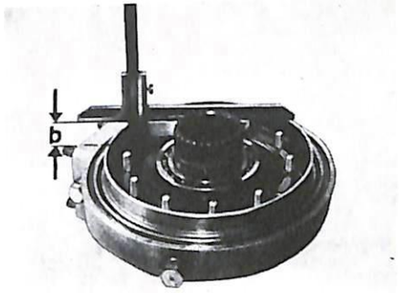

■

33 17 350 Rear swinging fork – removing and installing

Remove (install) rear wheel – 36 30 320.

Remove (install) final drive – 33 10 050.

Detach the spring strut at the lower left mounting.

Detach the rubber sleeve between gearbox and swinging fork at the gearbox end and push back as far as possible. At the universal joint, unscrew and remove the 4 connecting bolts with a ring wrench and set them aside together with the spring washers. When installing, tighten the bolts with special ring wrench BMW No. 00 2 560 and a torque wrench. See Specifications for tightening torques.

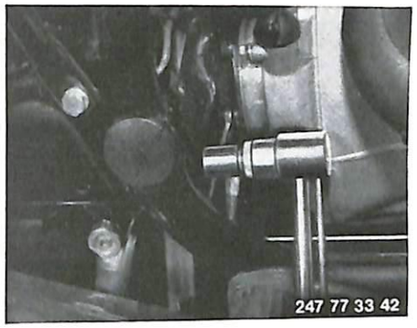

Remove the left and right swinging fork pivot bearings.

Take off the caps and slacken the locknut. Unscrew and remove the swinging fork bearing journals.

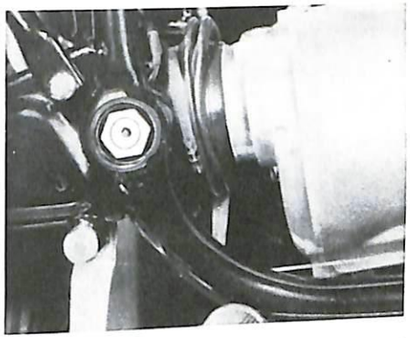

When installing: screw in the pivot journals so that distance (a) from the fork pivot hub to the frame is the same at both sides. The propeller shaft should be in the center of the fork tube so that it does not make contact when the suspension is at full bump or rebound. If necessary, distances (a) can be slightly different.

To obtain the necessary bearing preload, tighten both bearing pins to 20 Nm (14.7 lb.ft), then slacken off again and retighten to 10 Nm (7.4 lb.ft). Secure the pivot pins with the hex locknut. Note correct tightening torque (see Specifications).

Press in the caps.

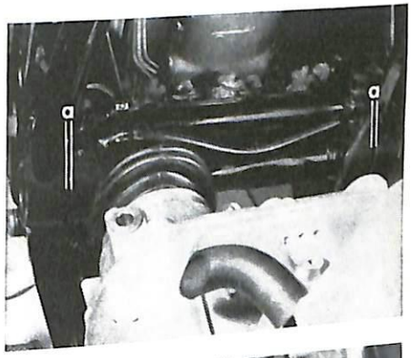

Detach the brake pedal by holding its pivot pin and unscrewing the stop nut.

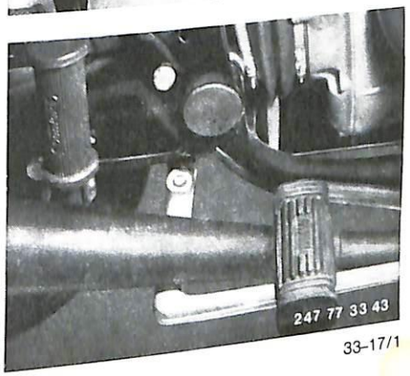

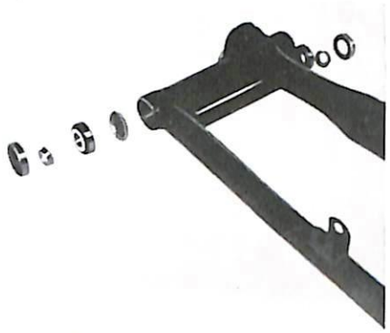

33 17 381 Taper roller bearings for rear swinging fork – renewing

Remove (install) rear swinging fork – 33 17 350.

Remove (install) propeller shaft – 26 11 000.

From 1981 models on, the taper roller bearings are not split.

■

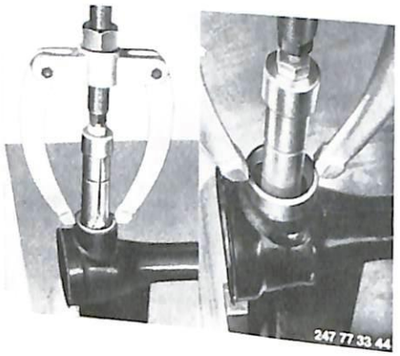

Remove the spacing bushing. Pull out the sealing ring with Kukko internal puller BMW No. 00 8 551. Pull the inner race of the taper roller bearing with the roller cage out of the swinging fork.

Pull out the outer bearing race with the same Kukko internal puller.

To drive in the bearing shell, use drift BMW No. 00 5 550.

When installing: clean the taper roller bearings before assembling, and grease well.

Notes on 1981 models: pull out the swinging fork bearings with Kukko internal puller No. 21/3 and support 22-1.

Drive in the new bearing with a piece of tube measuring 40 x 30 mm and 50 mm long (1.57 x 1.18 in and 1.97 in long).

33 52 100 Spring-damper strut – removing and installing

Unscrew the hex nuts with washer and take out the upper bolt. On the left damper, press the motorcycle down before removing the lower bolt.

For tightening torques, see Specifications.

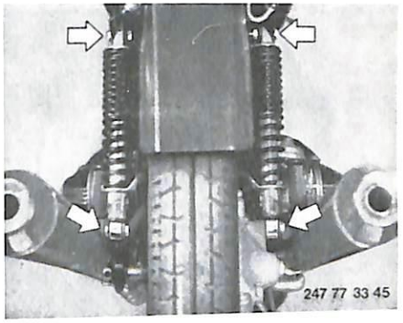

■

33 52 021 Damper – removing and installing

Remove (install) spring-damper strut – 33 52 100.

Secure clamping fixture BMW No. 33 5 600 in the vice. Clamp the lower spring strut mounting lug (arrow) into the fixture.

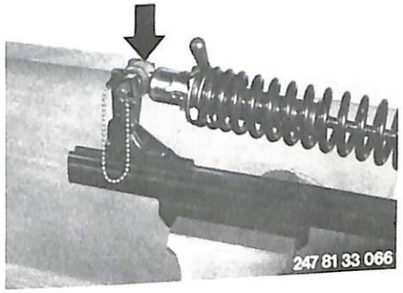

■

Insert clamp block BMW No. 33 5 605 (arrow) between the third and fourth turns of the spring.

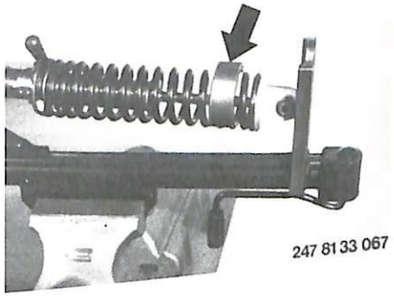

■

Push pressure block BMW No. 33 5 610 on to the spring strut until it touches the clamp block. The shoulder (arrow) must be at the same end as the clamp arm (1).

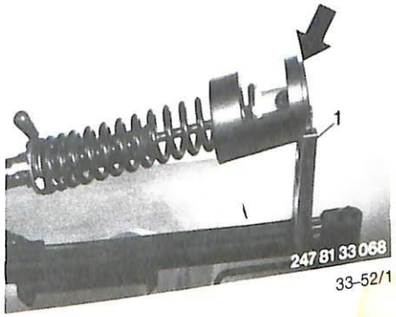

■

Move the pressure block against the clamp arm and preload the spring strut until the open-ended wrench can be applied to the flats on the piston rod. First push back the rubber buffer. Detach the spring strut lug from the piston rod with a suitable drift (arrow).

Release the tension in the spring strut.

On struts with a spring plate, the damper is removed in the same way as just described.

For tightening torques, see Specifications.

■

Troubleshooting – final drive

Fault	Cause	Remedy
Noise	Bearing defective	Renew bearing
	Excessive tooth backlash	Reset
	Too much play between coupling hub and shell	Renew
	Oil level in final drive or swinging arm too low	Check and add oil if necessary

34 Brakes

	Specifications	Page 34– 0/3
	Specifications (1979 models)	34– 0/5
	Specifications (1981 models)	34– 0/7
34 00 046	Front brake – bleeding	34–00/1
34 00 047	Rear brake – bleeding	34–00/1
34 10 114	Front brake – adjusting	34–00/1
34 11 000	Front brake pads – removing and installing	34–11/1
34 11 000	Front brake pads – removing and installing (1981 models)	34–11/1
34 11 020	Swing caliper – removing and installing	34–11/1
34 21 200	Rear brake pads – removing and installing	34–21/1
34 21 220	Rear brake caliper – removing and installing	34–21/1
34 21 301	Rear brake disc – removing and installing	34–31/1
34 31 000	Front master brake cylinder – removing and installing	34–31/1
34 31 000	Front master brake cylinder – removing and installing (1981 models)	34–31/1
34 31 001	Rear master brake cylinder – removing and installing	34–31/1
	Troubleshooting – brakes	34–31/3

Brakes

Technical Data

Model.	R 60/7	R 75/7	R 80/7	R 100/7	R 100 S	R 100 RS
Front wheel	Single disc brake			Twin disc brake		
Brake disc dia. mm (in)	264 (10.39)					
Min. brake disc thickness mm (in)	4.6 (0.181)					
Effective rubbed area per disc cm² (in²)	40 (6.2)					
Min. brake pad thickness mm (in)	1.5 (0.06)					
Max permissible brake surface runout in relation to wheel hub mm (in)	0.03 (0.0012)					
Brake master cylinder piston dia. mm (in)	17.46 (0.6874)					
Wheel brake cylinder piston dia. mm (in)	40 (1.57)					
Brake fluid volume in system l (Imp. pint, US quart)	0.06 (0.11, 0.06) 0.07 (0.12, 0.07) *					
Brake disc lateral runout mm (in)	0.2 (0.008)					
Rear wheel	Leading and trailing shoe drum brake					
Brake drum diameter mm (in) Max. brake drum oversize after wear mm (in)	200 (7.87) 201.5 (7.93)					
Brake lining width mm (in)	30 (1.18)					
Effective rubbed area cm² (in²)	214 (33.17)					
Min. brake lining thickness mm (in)	1.5 (0.06)					
Rear wheel						* Disc brake
Brake disc dia. mm (in)						260 (10.24)
Min. brake disc thickness mm (in)						4.6 (0.181)
Effective rubbed area cm² (in²)						37.4 (5.8)
Min. brake pad thickness mm (in)						1.5 (0.06)
Max. braking surface runout in relation to wheel hub mm (in)						0.03 (0.0012)

* on 1978 model

Brakes

Technical Data

Model	R 60 7	R 75 7	R 80/7	R 100 7	R 100 S	R 100 RS
Brake master cylinder piston dia. mm (in)						15.8 (0.622)
Wheel brake cylinder piston dia. mm (in)						38 (1.496)
Volume of brake fluid in system 1 (Imp. pint)						0.6 (1.0559)
Brake disc runout mm (in)						0.1 (0.004)
Clearance between piston (brake cyl.) and lever mm (in)						1.4...1.5 (0.055...0.059)
Brake fluid for front and rear disc brakes	DOT 3					

Tightening torques Nm (lb.ft.)

End cap	40...45 (29.5...33.2)
Brake pipe at master cylinder	8 ± 3 (5.9 ± 2.2)
Brake pipe at brake caliper	8 ± 3 (5.9 ± 2.2)

Brakes

Specifications – '79 models

Model	R 80/7	R 100 T	R 100 S	R 100 RT	R 100 RS
Front wheel	Twin disc brake				
Brake disc dia. mm (in)	264 (10.39)				
Min. brake disc thickness mm (in)	4.6 (0.181)				
Effective rubbed area per disc cm² (in²)	40 (6.2)				
Min. brake pad thickness mm (in)	1.5 (0.06)				
Max permissible brake surface runout in relation to wheel hub mm (in)	0.03 (0.0012)				
Brake master cylinder piston dia. mm (in)	17.46 (0.6874)				
Wheel brake cylinder piston dia. mm (in)	40 (1.57)				
Brake fluid volume in system 1 (Imp. pint, US quart)	0.07 (0.12, 0.07)				
Brake disc lateral runout mm (in)	0.1 (0.004)				
Rear wheel	Leading and trailing shoe drum brake				
Brake drum diameter mm (in) Max. brake drum oversize after wear mm (in)	200 (7.87) 201.5 (7.93)				
Brake lining width mm (in)	30 (1.18)				
Effective rubbed area cm² (in²)	214 (33.17)				
Min. brake lining thickness mm (in)	1.5 (0.06)				
Rear wheel	Disc brake				
Brake disc dia. mm (in)	260 (10.24)				
Min. brake disc thickness mm (in)	4.6 (0.181)				
Effective rubbed area cm² (in²)	37.4 (5.8)				
Min. brake pad thickness mm (in)	1.5 (0.06)				
Max. braking surface runout in relation to wheel hub mm (in)	0.03 (0.0012)				

Specifications — '79 models

Model	R 80/7	R 100 T	R 100 S	R 100 RT	R 100 RS
Brake master cylinder piston dia. mm (in)	15.8 (0.622)				
Wheel brake cylinder piston dia. mm (in)	38 (1.496)				
Volume of brake fluid in system 1 (Imp. pint)	0.6 (1.0998)				
Brake disc runout mm (in)	0.1 (0.004)				
Clearance between piston (brake cyl. and lever mm (in)	1.4–1.5 (0.055...0.059)				
Brake fluid for front and rear disc brakes	ATE "DOT 4 SL" brake fluid				

Tightening torques Nm (lb. ft.)

End cap	40...45 (29.5...33.2)
Brake pipe at master cylinder	8+3 (5.9+2.2)
Brake pipe at brake caliper	8+3 (5.9+2.2)

Specifications (1981 models)

Model	R 100	R 100 CS	R 100 RT	R 100 RS
Front wheel:	Twin disc brakes			
Brake disc diameter mm (in)	260 (10.24)			
Min. brake disc thickness mm (in)	4.6 (0.18)			
Effective rubbed area per disc cm² (in²)	37 (5.74)			
Min. brake pad thickness mm (in)	1.5 (0.06)			
Max. permissible runout of braking surface in relation to wheel hub mm (in)	0.03 (0.0012)			
Master cylinder piston dia. mm (in)	15 (0.59) or 16 (0.63)			
Wheel cylinder piston dia. mm (in)	38 (1.50)			
Max. brake fluid content (initial filling) l (Imp. pint, US quart)	app. 0.3 (0.53, 0.32)			
Brake disc lateral runout mm (in)	0.1 (0.004)			
Rear wheel:	Leading and trailing shoe drum			
Brake drum diameter mm (in) Brake drum max. wear limit mm (in)	200 (7.87) 201.5 (7.93)			
Lining width mm (in)	30 (1.18)			
Effective rubbed area cm² (in²)	89 (13.8)			
Min. lining thickness mm (in)	1.5 (0.06)			
Rear wheel:			Disc brake	
Disc diameter mm (in)			260 (10.24)	
Min. disc thickness			4.6 (0.18)	
Effective rubbed area cm² (in²)			37 (5.74)	
Min. brake pad thickness mm (in)			1.5 (0.06)	
Max. permissible runout of braking surface in relation to wheel hub mm (in)			0.03 (0.0012)	

Brakes

Specifications (1981 models)

Model	R 100	R 100 CS	R 100 RT	R 100 RS
Master cylinder piston dia. mm (in)			15.8 (0.62)	
Wheel brake piston dia. mm (in)			38 (1.50)	
Brake fluid volume in system l (Imp. pint, US quart)			0.3 (0.53, 0.32)	
Brake disc lateral runout mm (in)			0.1 (0.004)	
Free travel between brake cylinder piston and lever mm (in)			1.4 1.5 (0.055 0.059)	
Brake fluid for front and rear disc brakes	ATE "DOT 4 SL"			

Tightening torques Nm (lb. ft)

Brake pipe to brake hose	12 + 3 (8.8 + 2.2)
Brake pipe to master cylinder	8 + 2 (5.9 + 1.5)
Brake pipe to caliper	8 + 2 (5.9 + 1.5)

3.82 Addition

3.82 Addition

Front disc brake with swing caliper

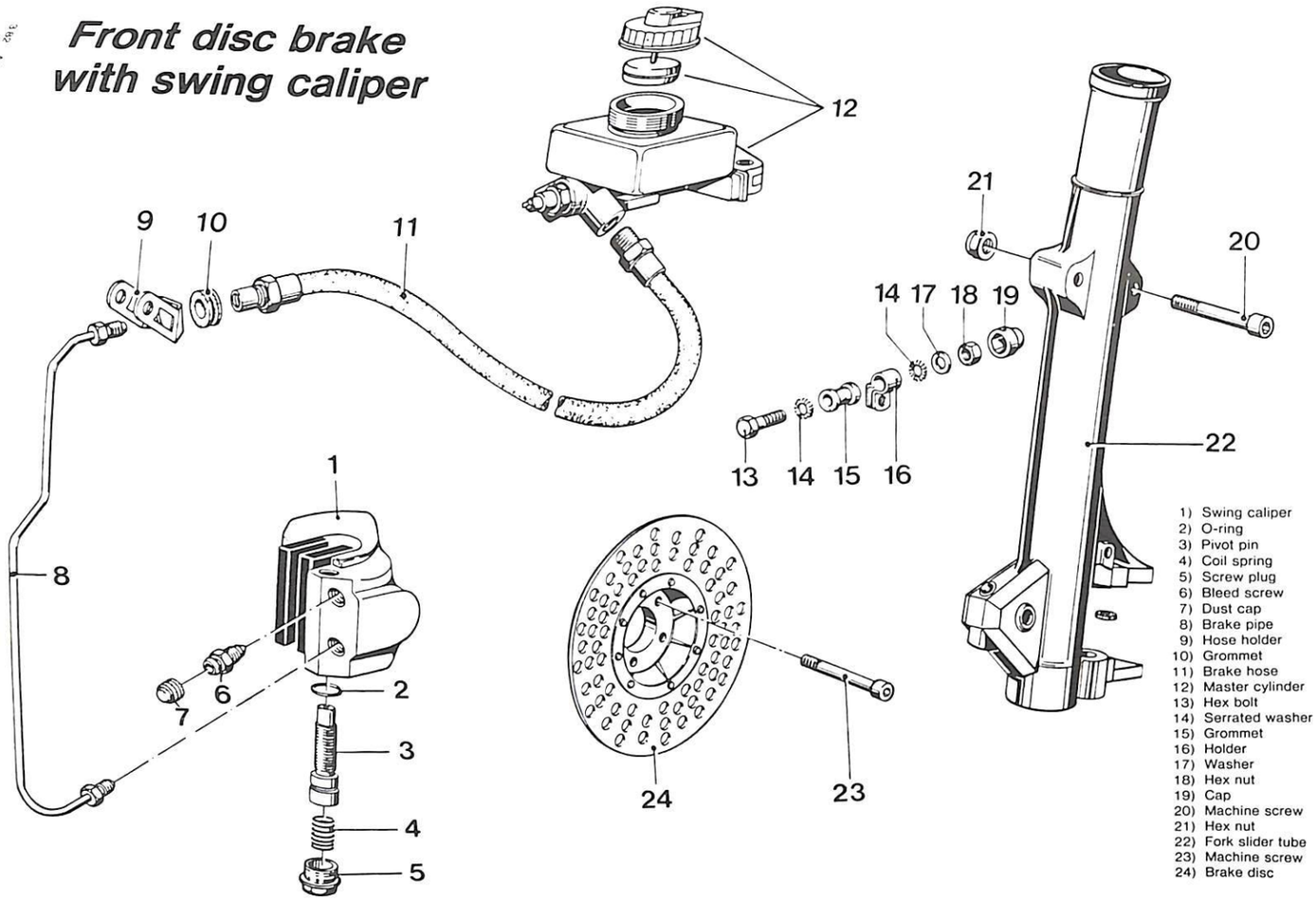

1) Swing caliper
2) O-ring
3) Pivot pin
4) Coil spring
5) Screw plug
6) Bleed screw
7) Dust cap
8) Brake pipe
9) Hose holder
10) Grommet
11) Brake hose
12) Master cylinder
13) Hex bolt
14) Serrated washer
15) Grommet
16) Holder
17) Washer
18) Hex nut
19) Cap
20) Machine screw
21) Hex nut
22) Fork slider tube
23) Machine screw
24) Brake disc

Rear disc brake operating mechanism

1) Master cylinder
2) Holder
3) Washer
4) Machine screw
5) Hex bolt
6) Spring washer
7) Washer
8) Brake pipe
9) Hose
10) Cable strap
11) Pullrod
12) Hex nut
13) Plate
14) Fork head
15) Tension spring
16) Hose clip
17) Hose
18) Brake fluid tank
19) Holder
20) Countersunk screw
21) Washer
22) Protective cap
23) Set of piston components
24) Holder

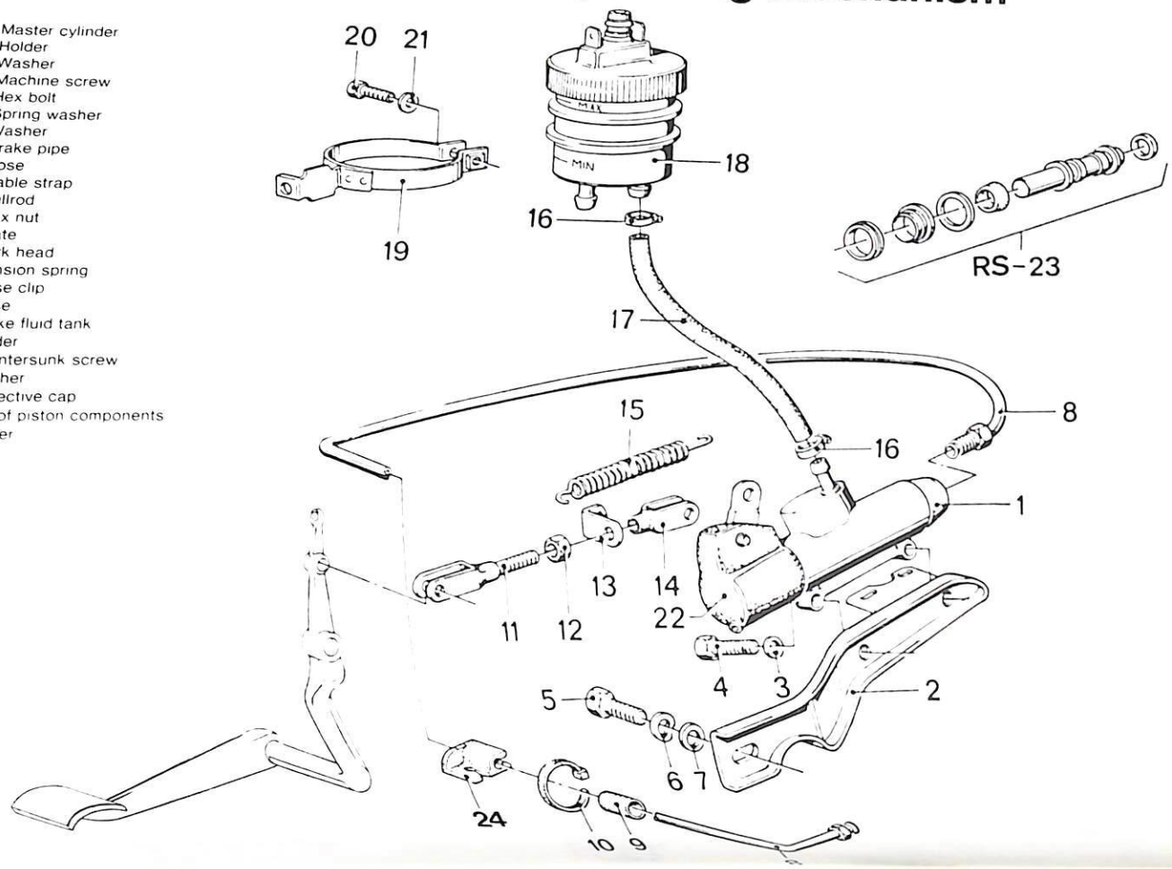

382 Abdruck

Rear disc brake

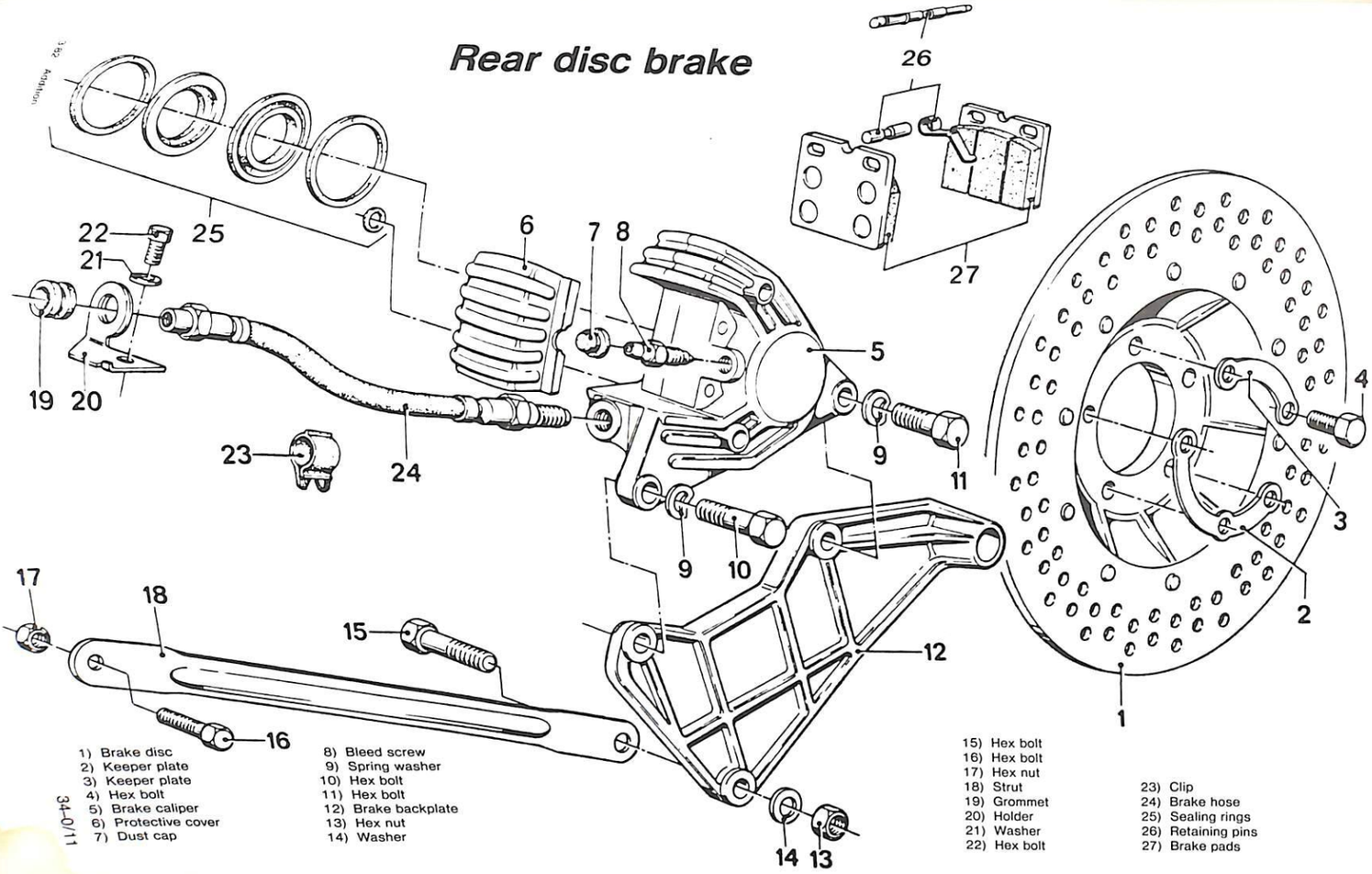

1) Brake disc
2) Keeper plate
3) Keeper plate
4) Hex bolt
5) Brake caliper
6) Protective cover
7) Dust cap
8) Bleed screw
9) Spring washer
10) Hex bolt
11) Hex bolt
12) Brake backplate
13) Hex nut
14) Washer
15) Hex bolt
16) Hex bolt
17) Hex nut
18) Strut
19) Grommet
20) Holder
21) Washer
22) Hex bolt
23) Clip
24) Brake hose
25) Sealing rings
26) Retaining pins
27) Brake pads

34 00 046 Front brake – bleeding

Brake fluid must be renewed once a year.

Brake fluid is hygroscopic, that is to say it absorbs moisture from the air through the vent hole in the fluid reservoir. Because of this its boiling point gradually drops from 240° C (464° F) to 160 . . . 180° C (224 . . . 244° F).

Warning: never let brake fluid come into contact with the motorcycle's paintwork, or the finish will be damaged.

Fill the brake fluid reservoir up to the "MAX" mark. Push the bleed hose on to the bleed screw on the brake caliper.

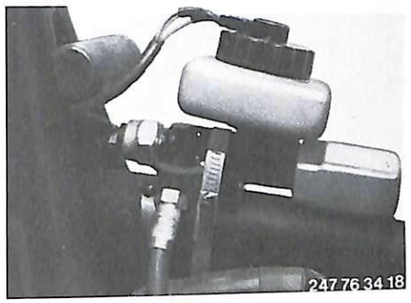

■

Apply the hand brake several times until brake pressure is felt to build up.

Hold the brake lever on against this pressure build-up, open the bleed screw and at the same time pull the lever firmly. Do not release the lever until the bleed screw has been closed.

Repeat this procedure until the brake fluid emerges free from air bubbles, then tighten the bleed screw.

Warning: the brake fluid reservoir must not be pumped dry during the bleeding process, or else air will once again be drawn into the brake circuit.

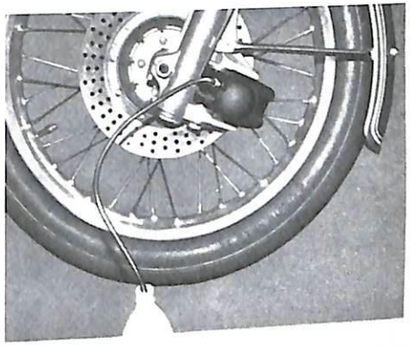

■

34 00 047 Rear brake – bleeding

Take off the right battery cover and add fluid to the reservoir until full.

Bleeding procedure: see 34 00 046.

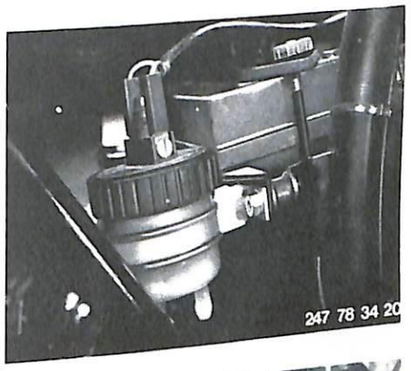

■

34 10 114 Front brake (hand brake) – adjusting

If hand brake lever free travel is too great (wire cable has stretched), it must be adjusted. This can only take place at the master cylinder after removing the fuel tank. Take off the dust cap and measure free travel with a feeler gauge.

To adjust correctly, loosen the locknut on the adjusting screw. Insert the feeler gauge and turn the adjusting screw clockwise (to right) to increase free travel or counterclockwise (to left) to reduce free travel. The setting is correct when the feeler gauge can just be moved.

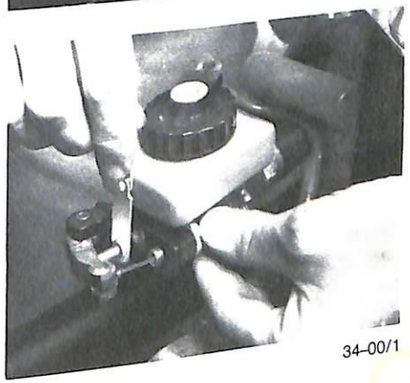

■

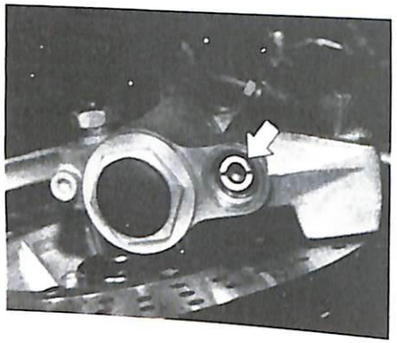

To adjust the brake pads, remove the protective cap from the eccentric pin and unscrew with the spring. Using a screwdriver, adjust the eccentric pin (arrow) so that the inner pad is parallel to the inner surface of the brake disc (pull the brake caliper out slightly with the hand).

Apply ink with a felt-tipped pen to the inner face of the brake disc (one or two heavy lines from the inside outwards are sufficient). Turn the front wheel and pull the brake caliper outwards at the same time. With the aid of the ink line, check that the inner brake pad is making contact squarely with the disc. The outer pad is operated by the piston and automatically adjusts to the correct position. Offer up the end cap with spring (greased) and tighten.

For tightening torque, see Specifications.

■

34 11 000 Front brake pads – removing and installing

Remove the end cap from the eccentric pin and place to one side together with the spring. Insert a suitable bolt and pull out the eccentric pin. Remove the swing caliper from the fork slider tube.

Remove the spring (arrow) holding the inner brake pad, and take both pads out of the brake caliper.

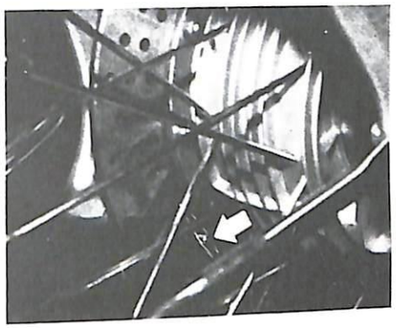

■

To avoid scored brake discs, worn pads must be renewed in good time. The minimum permissible thickness is 1.5 mm (0.06 in).

When installing: before inserting the new pads, press back the piston into the wheel brake cylinder with a screw clamp. After this, grease the guide pin lightly (with Molykote) and install it with the outer pad after inserting the O-ring. Secure the inner pad with the retaining spring, the bent-over end of which must point down.

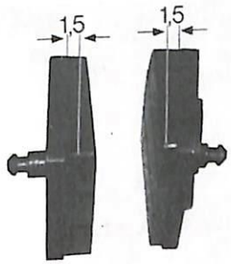

■

34 11 020 Swing caliper – removing and installing

Draw off the brake fluid from the reservoir with a siphon, which should only be used for brake fluid.

Unscrew the brake pipe screw (1).

Remove the end cap (2) and pull out the spring.

Pull out the eccentric pin by screwing in a suitable bolt.

Detach and set aside the swing caliper.

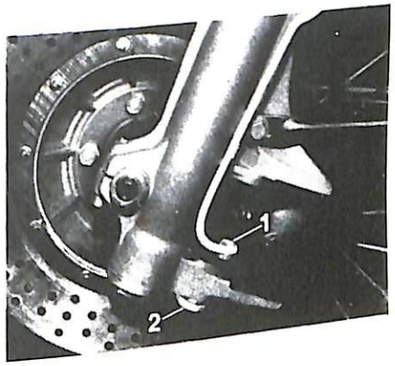

■

34 11 000 Front brake pads – removing and installing (1981 models)

Lever the plastic cap off the brake caliper with a screwdriver.

Drive retaining pins (1) and (2) out from the inside with a suitable drift. Take out the spreader spring and the brake pads.

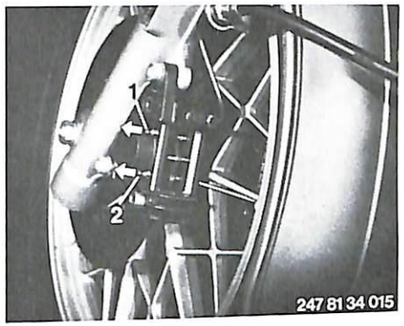

To prevent scored brake discs, worn pads must be renewed in good time. The minimum permissible thickness is 1.5 mm (0.06 in) – see illustration.

When installing: before the new pads are inserted, press back the piston into the wheel brake cylinder.

34 21 200 Rear brake pads – removing and installing

Detach support strut from brake carrier, unscrew the quick-release axle nut, slacken the axle clamp bolt and pull out the axle.

Press the brake hose out of the retaining clip on the swinging arm and pull the brake caliper carrier with brake caliper away from the brake disc.

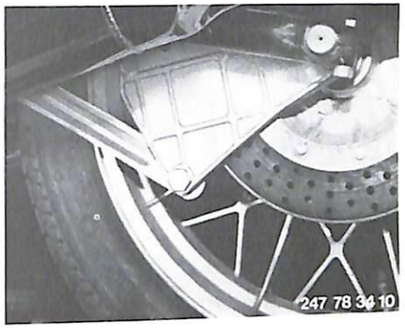

Lift the cover cap off the brake caliper with a screwdriver blade. Drive out the first pad retaining pin with a suitable drift, remove the center clamping pin and drive out the second retaining pin. Allow the brake pads to drop out of the brake caliper.

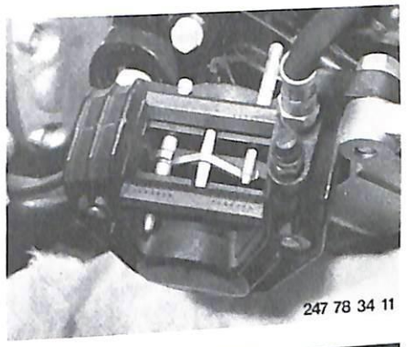

34 21 220 Rear brake caliper – removing and installing

Remove and install the brake pads – 34 21 200.
Remove the two hex bolts on the brake carrier (arrows) and take off the brake caliper.

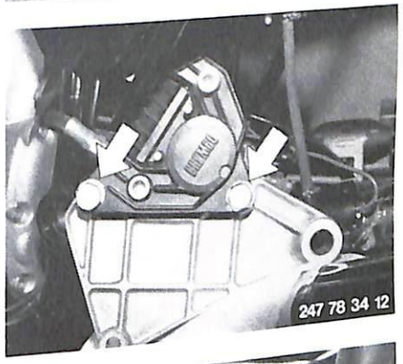

Take off the right battery cover, drain the rear brake fluid reservoir and detach the brake hose from the brake caliper.

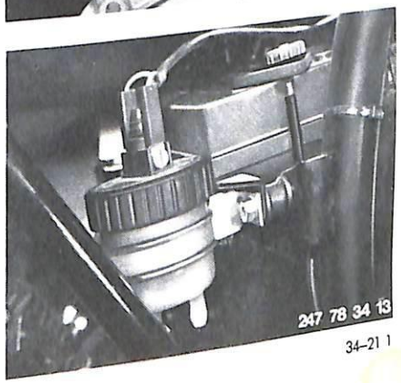

34 21 301 Rear brake disc – removing and installing

Remove and install rear brake – 26 30 320.
Remove keepers from hex bolts, unscrew the bolts and take off the brake disc.

When installing: use new keeper plates.

■

34 31 000 Front brake master cylinder – removing and installing

Detach and attach the fuel tank – 16 11 030

Bleed the brakes – 34 00 046

Remove the rubber dust cap

■

Disconnect brake cable and remove knurled screw

■

Detach brake hose, pull off brake telltale lamp cable and unscrew hose clip

Lift off the brake master cylinder

■

34 31 001 Rear brake master cylinder – removing and installing

Remove rear wheel – 36 30 320

Remove brake pedal lever – 35 21 000

Detach brake fluid reservoir, drain and detach hose clip at brake cylinder and brake pipe (arrows)

■

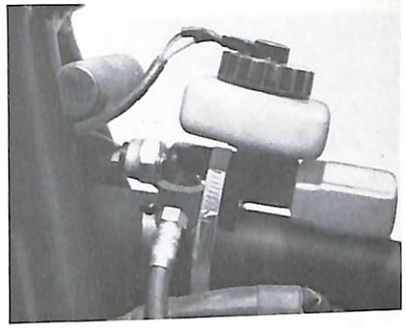

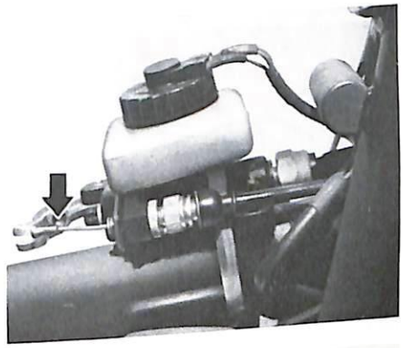

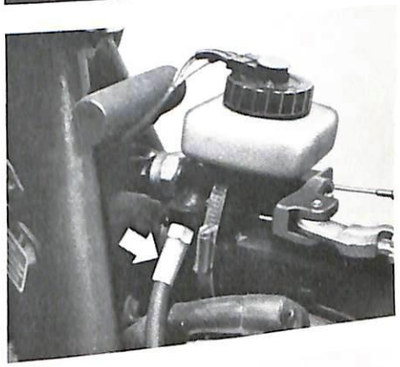

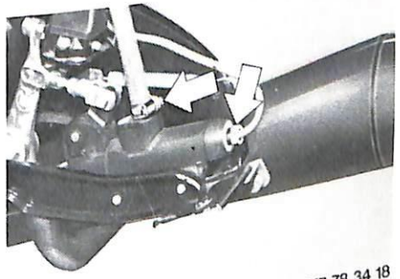

247 78 34 18

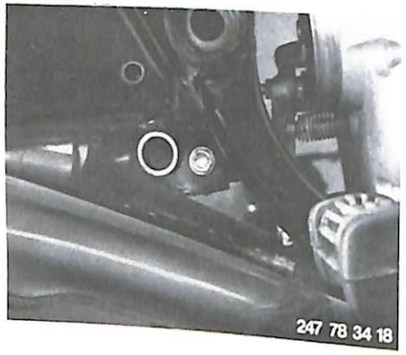

Detach support for brake master cylinder at frame and remove internal hexagon screw for muffler mount.

Remove brake cylinder retaining bolts at support.

34 31 000 Master cylinder – removing and installing (1981 models)

Loosen the brake hose at the master cylinder (arrow).

Unscrew the Allen screws (1 and 2) and remove the brake fluid reservoir with the master cylinder.

Let the brake fluid reservoir hang down and unscrew the retaining screw for the brake hose.

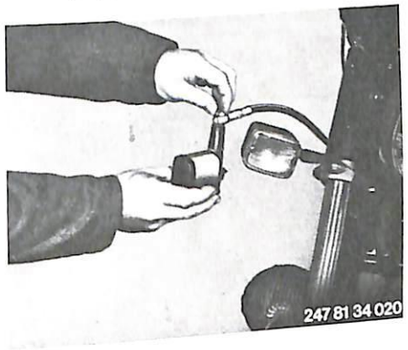

Troubleshooting – brakes

Fault	Cause	Remedy
Handbrake		
Judder at brake lever	Excessive lateral runout at brake disc	Renew brake disc
Poor braking action	Brake pads worn	Renew
	Air in brake circuit	Bleed
Poor action when braking harshly	Old brake fluid	Renew – see also page 34–00/1
Foot brake		
Brake pedal unsteady	Brake drum out of true	Skim drum
Poor brake action	Oil on brake linings	
	Brake linings worn	Renew linings

35 Foot controls

35 21 000 Foot brake lever – removing and refitting . . . . . Page 35-21/1

35 21 000 Foot brake lever – removing and installing (mechanical brake)

Unscrew locknut while supporting on the bearing bolt.

Take off the foot brake lever.

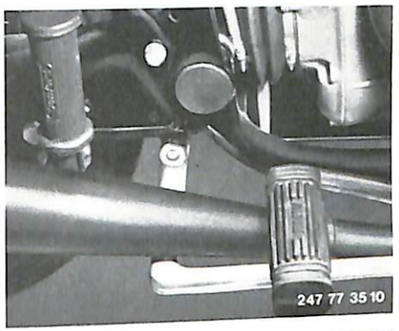

Detach the keeper pin from the brake pull rod and remove the pull rod.

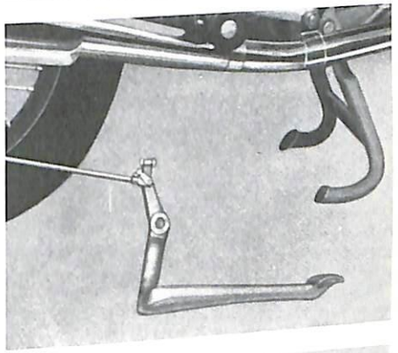

Foot brake adjustment:
Adjust the wing nut at the end of the pull rod until the rear wheel just starts to brake. Turn the wing nut back by 3 to 4 turns.

Removing and installing foot brake lever (hydraulic brake)

Remove keeper from pull rod (arrow) at brake cylinder and disconnect tension spring. Unscrew locknut from pivot pin and take off foot brake lever.

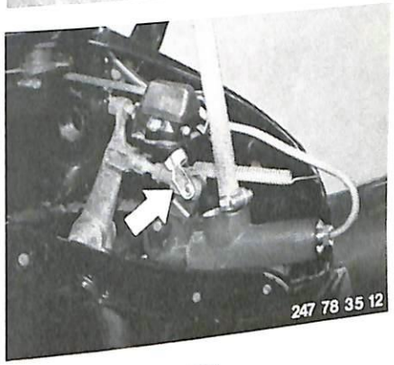

When the pedal is pressed down lightly with a finger, the free travel before the master cylinder operating point is reached will be noticeable.

This free travel measures 2.5 ... 3.0 mm (0.1 ... 0.12 in) between the stop light switch when pressed in and the adjusting bolt.

If necessary, correct free travel.

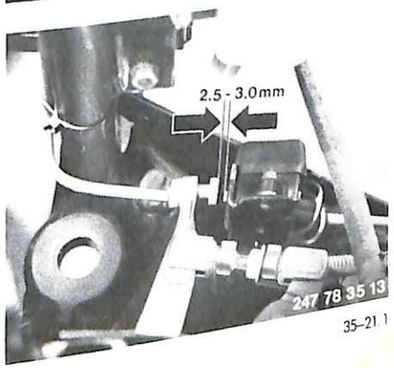

36 Wheels and tyres

Specifications	Page	36– 0/3
Specifications (1979 models)		36– 0/5
Specifications (1981 models)		36– 0/7
36 30 028	Wheels – static balancing	36–30/1
36 30 300	Front wheel – removing and installing	36–30/3
36 30 320	Rear wheel – removing and installing	36–30/4
36 31 321	Spokes of one wheel (front or rear) – renewing	36–31/1
36 31 371	Wheel bearings of one wheel (front or rear) – renewing	36–31/2

Wheels and tires

Technical Data

Model	R 60/7	R 75/7	R 80/7	R 100/7	R 100 S	R 100 RS	
Type of rim	aluminium well base rim						
Rim size, front	1.85 B × 19						
Rim size, rear	2.15 B × 18					Spoked wheel 2.15	Cast alloy wheel 2.50 / 2.75
Number of spokes	40						—
Max. radial run-out, mm(in)	0.5 (0.020) measured at the rim flange without tire						0.3 (0.012)
Max. lateral run-out, mm(in)	0.3 (0.012) measured at the rim flange without tire						0.3 (0.012)
Tire size, front	3.25 S 19			3.25 H 19			
Tire size, rear	4.00 S 18			4.00 H 18			
Max. tire imbalance measured at the inner rim diameter, cmp equivalent to g(oz)	170 8–9 (0.28—0.32)						
Max. permissible run-out of side groove mm(in)	1.7 (0.067)						
Tire pressures: Front wheel solo above 160 km h (100 mile/h) lb in² (bar)	27 (1.9) / 30 (2.1)						
with pillion passenger above 160 km/h lb in² (bar)	30 (2.1) / 30 (2.1)						
Rear wheel solo / above 160 km h (100 mile/h) lb in² (bar)	28.5 (2.0) / 31 (2.2)						
with pillion passenger / above 160 km/h (100 mile h) lb in² (bar	31 (2.2) / 33 (2.3)						
Travelling at max. speed over long period lb/in² (bar)	2.9 more (0.2)						
Wheel bearing grease	Brand-name multi-purpose grease with 180° C (355° F) drip point (approx.)						
Quantity of grease per wheel, g(oz)	10 (0.3)						

Wheels and tires

Technical Data

Model	R 60/7	R 75/7	R 80/7	R 100/7	R 100 S	R 100 RS
Permissible wheel load solo front with 27 psi (1.9 bar) kg(lb) rear with 28.5 psi (2.0 bar) kg(lb)	160 (353) 245 (540)					
Permissible wheel load with pillion passenger front with 28.5 psi (2.0 bar) kg(lb) rear with 32.0 psi (2.25 bar) kg(lb)	178 (392) 270 (595)					

Tightening torques Nm (ft.lb) and friction values Ncm

Friction moment of wheel bearing with stipulated tightening torque of axle nut	Ncm	15 30
Quick release axle front and rear	Nm (lb ft)	45 50 (33.2 36.8)

All other screws and nuts in accordance with the standard values in the tables of the manufacturers or the new BMW Standards Sheet 60002.0

Wheels and tires

Specifications — '79 models

Model	R 80/7	R 100 T	R 100 S	R 100 RT	R 100 RS
Type of rim	Light alloy pressure-cast wheels				
Rim size, front	1.85 B × 19				
Rim size, rear	2.50 B × 18		2.75 C × 18		
Max. radial run-out, mm (in)	0.9 (0.035) measurd at the rim flange without tire				
Max. lateral run-out, mm (in)	0.5 (0.019) measured at the rim flange without tire				
Tire size, front	3.25 S 19		3.25 H 19		
Tire size, rear	4.00 S 18		4.00 H 18		
Max. tire imbalance measured at the inner rim diameter, cmp equivalent to g(oz)	170 8–9 (0.28–0.32)				
Max. permissible run-out of side groove mm (in)	1.7 (0.067)				
Tire pressures: Front wheel solo/above 160 km/h (100 mile/h) lb/in² (bar) with pillion passenger/above 160 km/h lb/in² (bar)	27 (1.9) / 30 (2.1) 30 (2.1) / 30 (2.1)				
Rear wheel solo/above 160 km/h (100 mile/h) lb/in² (bar) with pillion passenger/above 160 km/h (100 mile/h) lb/in² (bar)	28.5 (2.0) / 31 (2.2) 31 (2.2) / 33 (2.3)				
Travelling at max. speed over long period lb/in² (bar)	2.9 more (0.2)				
Wheel bearing grease	Brand-name multi-purpose grease with 180° C (355° F) drip point (approx.)				
Quantity of grease per wheel, g(oz)	10 (0.3)				

Wheels and tires

Specifications – '79 models

Model	R 80 7	R 100 T	R 100 S	R 100 RT	R 100 RS
Permissible wheel load solo front with 27 psi (1.9 bar) kg (lb) rear with 28.5 psi (2.0 bar) kg (lb)	160 (353) 245 (540)				
Permissible wheel load with pillion passenger front with 28.5 psi (2.0 bar) kg (lb) rear with 32.0 psi (2.25 bar) kg (lb)	178 (392) 270 (595)				

Tightening torques Nm (ft. lb) and friction values Ncm

Friction moment of wheel bearing with stipulated tightening torque of axle nut	Ncm	15 30
Quick release axle front and rear	Nm (lb. ft)	45 50 (33.2 36.8)

All other screws and nuts in accordance with the standard values in the tables of the manufacturers or the new BMW Standards Sheet 60002.0

Wheels and tyres

Specifications (1981 models)

Model	R 100	R 100 CS	R 100 RT	R 100 RS
Rim type	Pressure cast light alloy			
Front rim size	2.15 B x 19			
Rear rim size	2.50 B x 18		2.75 C x 18	
Max. radial runout mm (in)	0.9 (0.035) measured at rim shoulder without tyre			
Lateral runout, max. mm (in)	0.5 (0.020) measured at rim shoulder without tyre			
Front tyre size	3.25 H 19			
Rear tyre size	4.00 H 18			
Max. tyre imbalance, measured at inner rim dia. cmp Equivalent to g (oz)	170 8 . . . 9 (0.28 . . . 0.32)			
Max. permissible runout at sidewall mm (in)	1.7 (0.067)			
Tyre pressures: – in bar (lb/in²) when cold				

	One-up Front	One-up Rear	With pillion passenger Front	With pillion passenger Rear
Up to 130 km/h (81 mile/h)	1.9 (27)	1.8 (26)	2.1 (30)	2.0 (28)
130 – 160 km/h (81 – 100 mile/h)	1.9 (27)	2.0 (28)	2.1 (30)	2.2 (31)
Above 160 km/h (100 mile/h)	2.1 (30)	2.2 (31)	2.1 (30)	2.3 (33)

Important: note minimum legal tread depth.

Recommended minimum tread depths:
2 mm (0.08 in) up to 130 km/h (81 mile/h)
3 mm (0.12 in) above 130 km/h (81 mile/h)

Wheel bearing lubrication	Brand-name anti-friction bearing grease, usable temperature range –30 . . . +140 °C (–22 . . . +284 °F), drip point 150 . . . 230 °C (302 . . . 446 °F), high corrosion protection, good moisture and oxidation resistance – e.g. Shell Retinax A
Quantity of grease per wheel g (oz)	10 (0.35)

Wheels and tyres

Specifications (1981 models)

Model	R 100	R 100 CS	R 100 RT	R 100 RS
Permissible wheel loads				
- front kg (lb)		190 (419)		
- rear kg (lb)		280 (617)		

Tightening torques Nm (lb.ft) and friction values in Ncm

Whell bearing friction at specified axle nut tightening torque	Ncm	15 - 30
Front and rear quick-release axle nuts	Nm (lb.ft)	48 (35)
Axle clamp bolts	Nm (lb.ft)	17 (12.5)

All other bolts and nuts are to be tightened to the customary values as shown in the manufacturers' tables and on the latest BMW 60002.0 standards sheet

Wheel bearings (front spoked wheel)

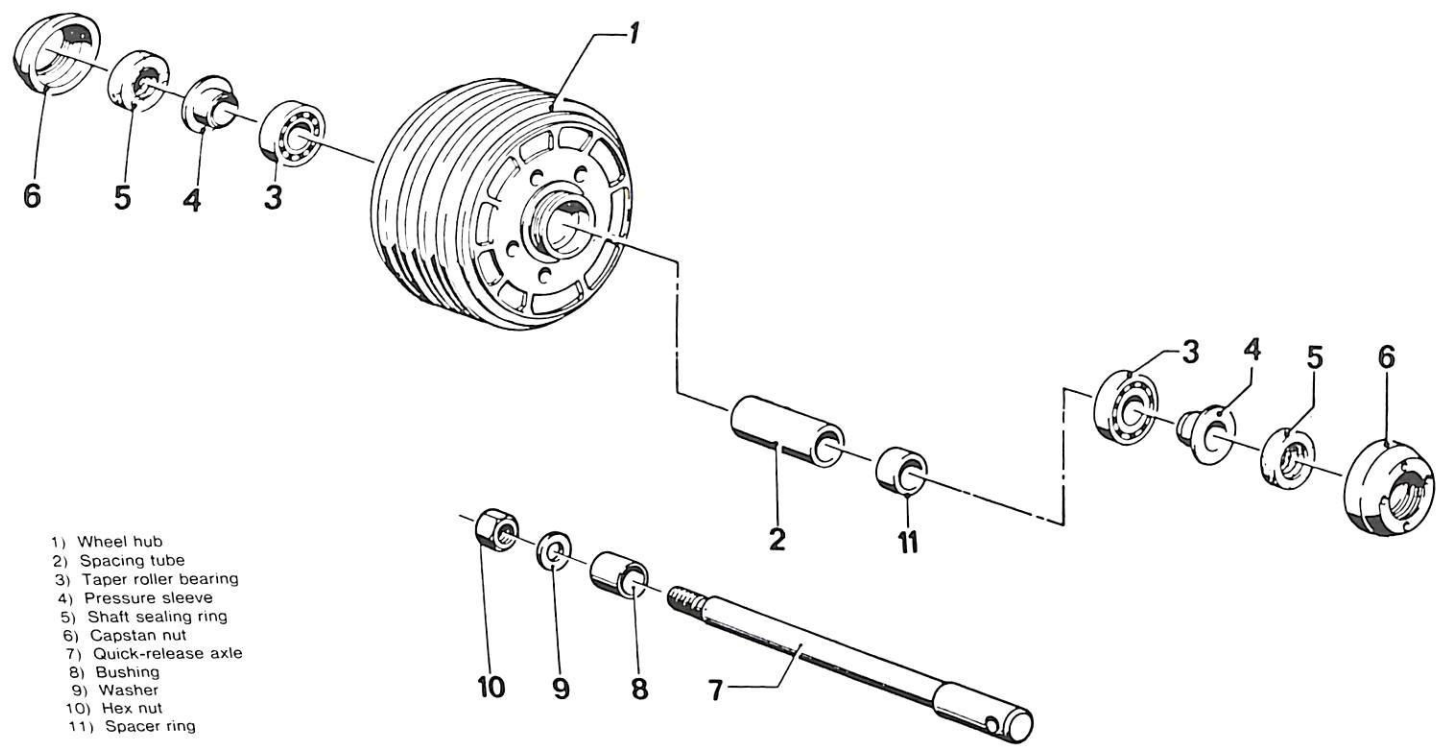

1) Wheel hub
2) Spacing tube
3) Taper roller bearing
4) Pressure sleeve
5) Shaft sealing ring
6) Capstan nut
7) Quick-release axle
8) Bushing
9) Washer
10) Hex nut
11) Spacer ring

Wheel bearings (rear spoked wheel)

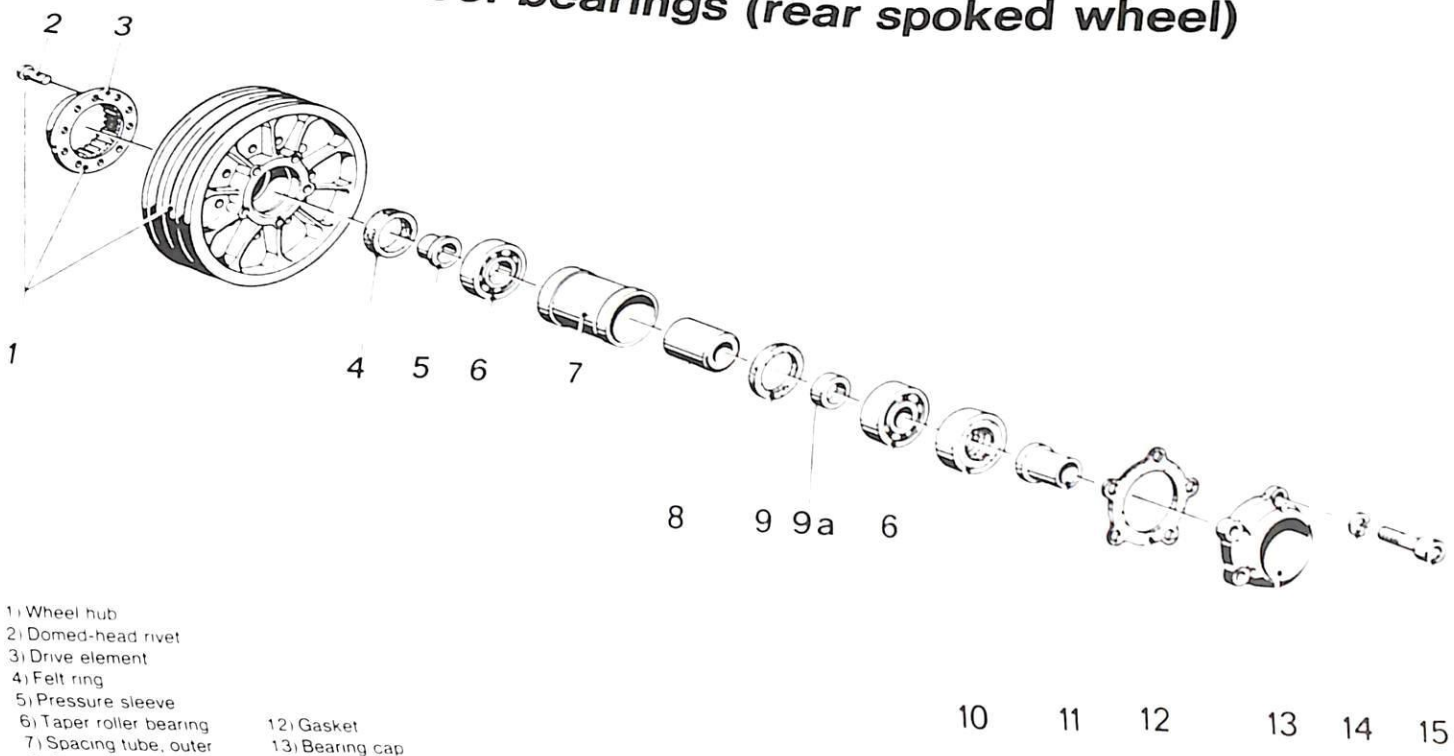

1) Wheel hub
2) Domed-head rivet
3) Drive element
4) Felt ring
5) Pressure sleeve
6) Taper roller bearing
7) Spacing tube, outer
8) Spacing tube, inner
9) Ring
9a) Spacing ring
10) Shaft sealing ring
11) Pressure sleeve
12) Gasket
13) Bearing cap
14) Spring washer
15) Machine screw

Wheel bearings (front cast alloy wheel)

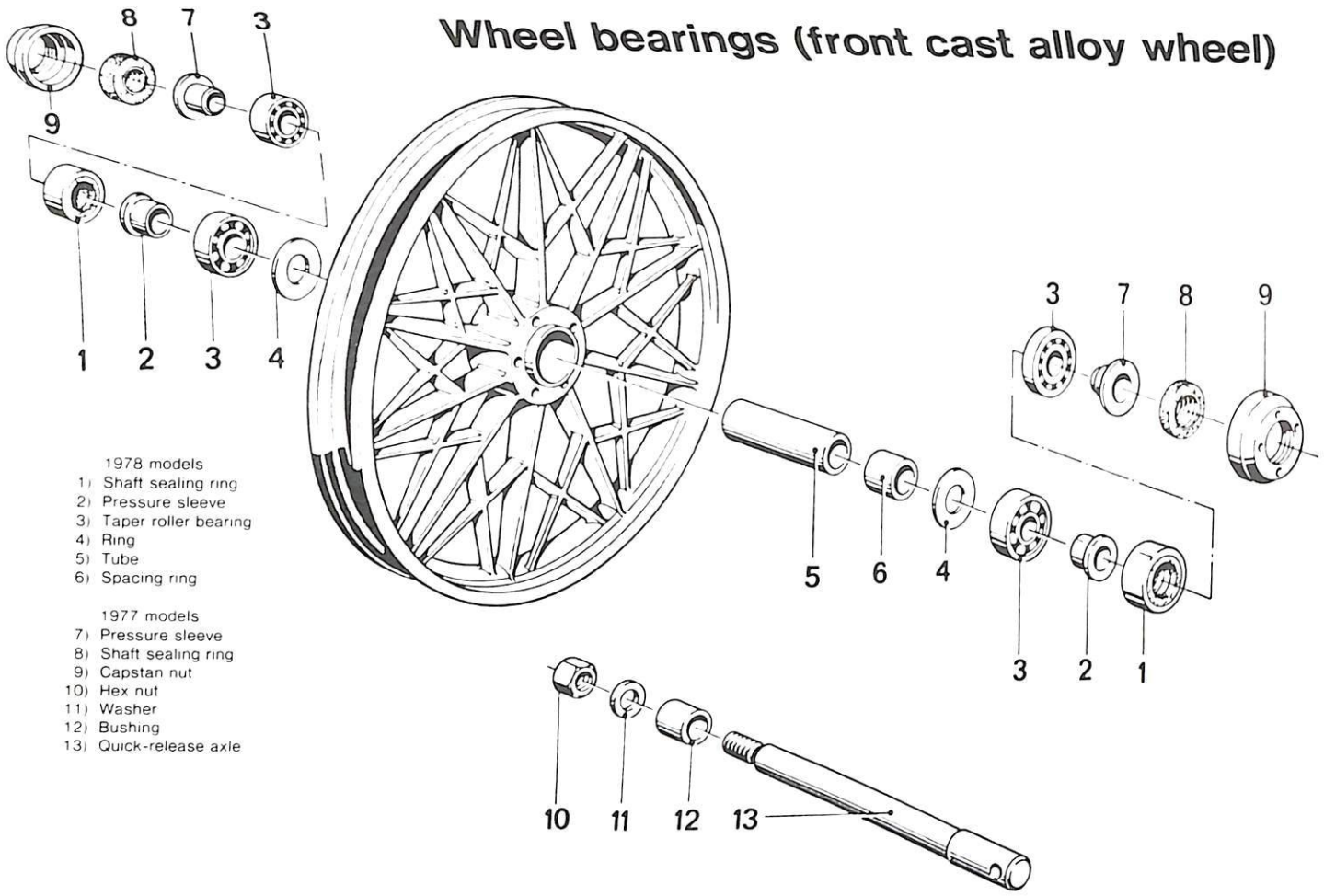

1978 models
1) Shaft sealing ring
2) Pressure sleeve
3) Taper roller bearing
4) Ring
5) Tube
6) Spacing ring

1977 models
7) Pressure sleeve
8) Shaft sealing ring
9) Capstan nut
10) Hex nut
11) Washer
12) Bushing
13) Quick-release axle

Wheel bearings (rear cast alloy wheel)

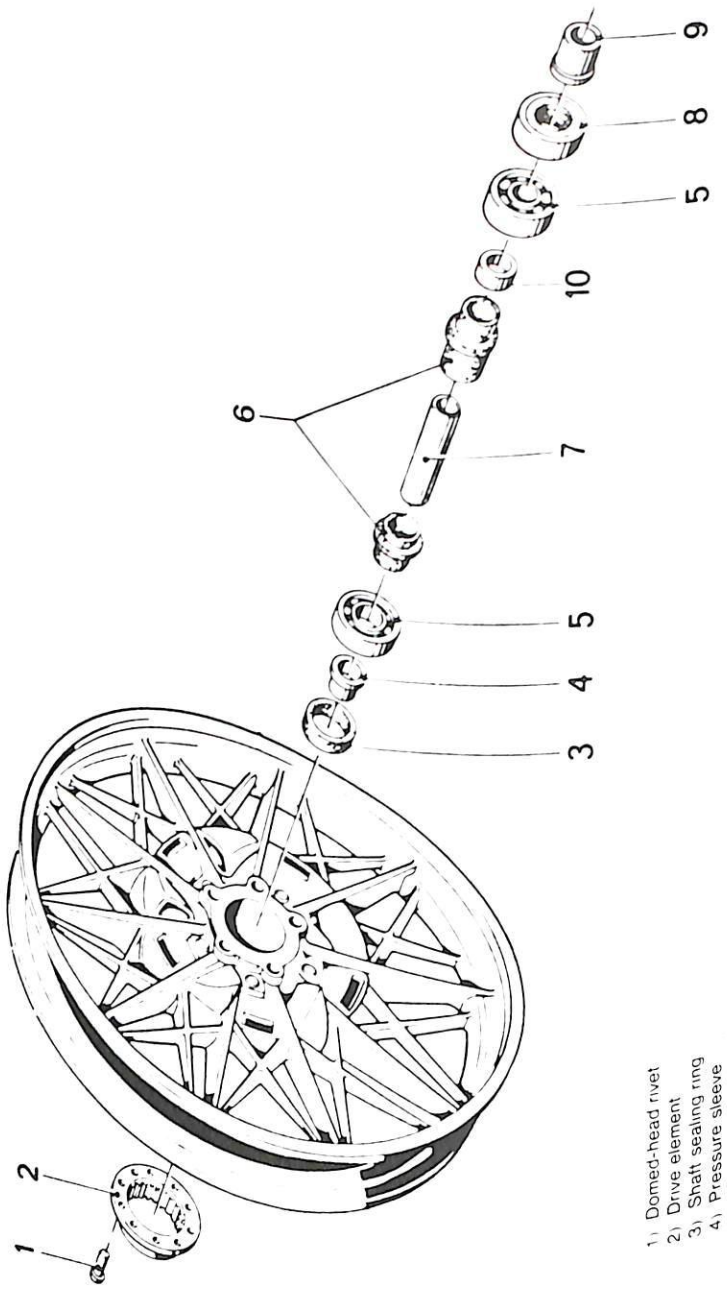

1) Domed-head rivet
2) Drive element
3) Shaft sealing ring
4) Pressure sleeve
5) Taper roller bearing
6) Ring
7) Spacing tube
8) Shaft sealing ring
9) Pressure sleeve
10) Spacing ring

36 30 028 Wheels – static balancing

Push the balancing shaft (1) through the wheel bearings and preload them slightly with knurled nut (2).

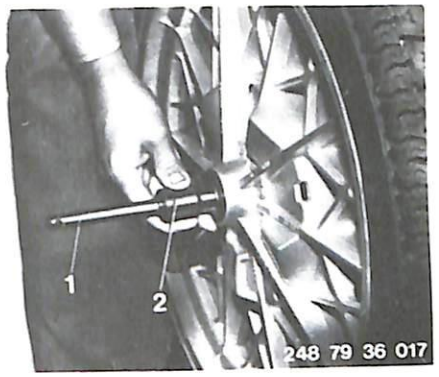

■

Mount the wheel on balancing device BMW No. 36 3 600 and allow it to spin freely to a standstill. Attach a weight (arrow) opposite the heaviest point.

Note: when correctly balanced, the wheel should stop in any position. In the case of spoked wheels, do not drive the weight on firmly on the balancing block.

■

For cast alloy wheels, the weights are attached with the aid of assembly pliers BMW No. 36 3 830.

Bring the pliers as close to the rim as possible, press together and push on the weight retaining clip. The amount of weight needed must be divided equally between the left and right sides of the rim.

Warning: maximum balancing weight 60 g (2 oz).

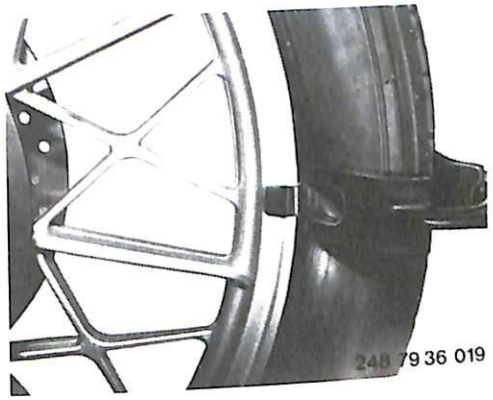

■

36 30 300 Front wheel – removing and installing

Place the motorcycle on its center stand and support it under the oil sump.

247 77 36 10

■

Unscrew axle nut (1) with washer. Loosen the clamp bolts (2) for the front axle (Allen screws with washers) and pull out front axle (3), using a drift.

When installing: grease the front axle lightly. First tighten the axle nut (insert a mandrel if necessary to prevent it from turning. Next compress the front forks strongly several times, then tighten the clamp bolts. This is a precaution to prevent stresses being trapped in the fork slider tubes.

To avoid having to reset the twin-disc brake swing calipers, make sure that the wheel revolves in the same direction as before it was removed.

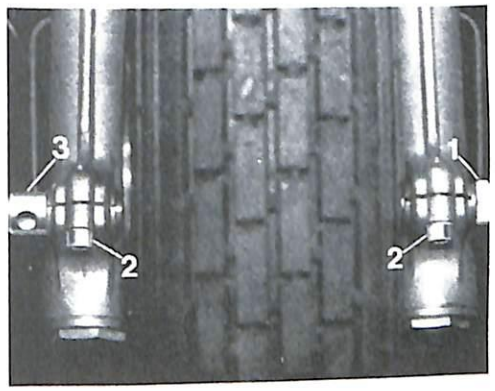

■

Take out the front wheel, swinging the brake caliper out to clear the wheel.

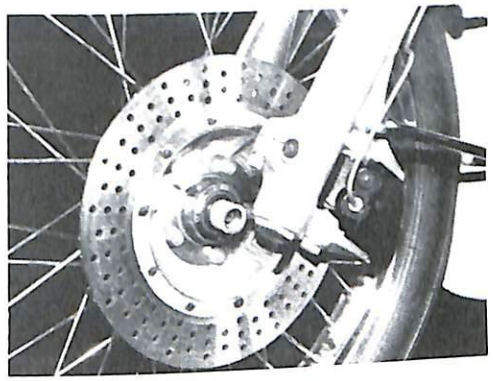

■

From 1981 models on, one of the brake calipers of the twin disc brake must be stripped down before the front wheel can be removed.

For tightening torques, see Specifications.

■

36 30 320 Rear wheel – removing and installing

Place the motorcycle on its center stand and prop it up on additional supports

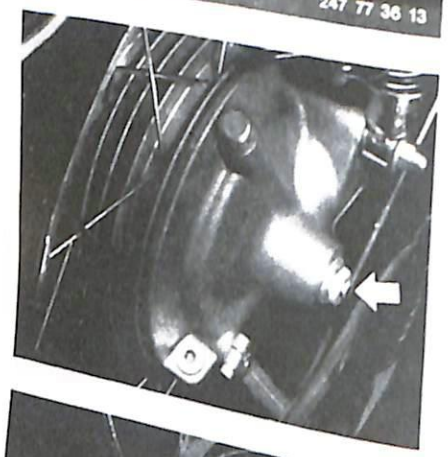

Unscrew the quick-release axle nut on the drive side and remove it with the washer.

If a rear disc brake is installed, detach the strut from the brake caliper support plate and fold it to the rear.

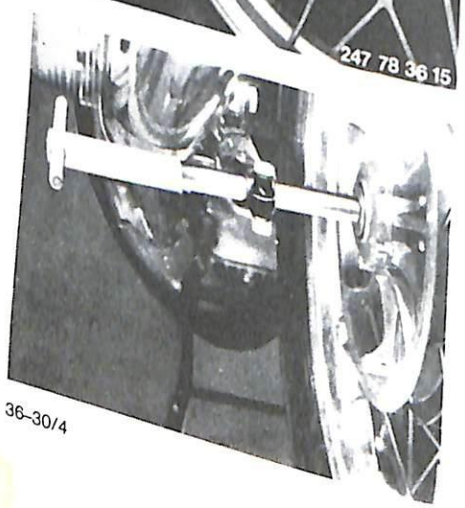

Unscrew the quick-release axle clamp screw nut at the left arm of the swinging fork, and remove it together with the hex bolt and spring washer. Pull the axle out with a mandrel

If the motorcycle has a rear disc brake, press the brake hose out of the retaining clip on the swinging fork arm. Pull the brake caliper and its support plate away from the disc and place them on a soft cloth. Secure with wire.

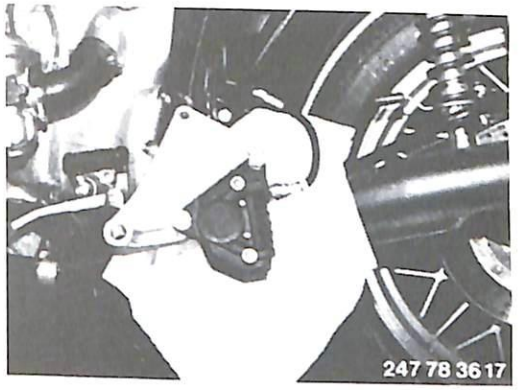

Pull the rear wheel away from the final drive and remove from the motorcycle, which should be tilted slightly to the right.

When installing: clean the axle and splines thoroughly and apply a high-viscosity grease.
Turn the quick-release axle as it is inserted. After tightening the quick-release axle nut (1), compress the motorcycle's suspension fully before tightening clamp screw (2). The cross-hole in the head of the axle shaft must point to the rear.

For tightening torques, see Specifications

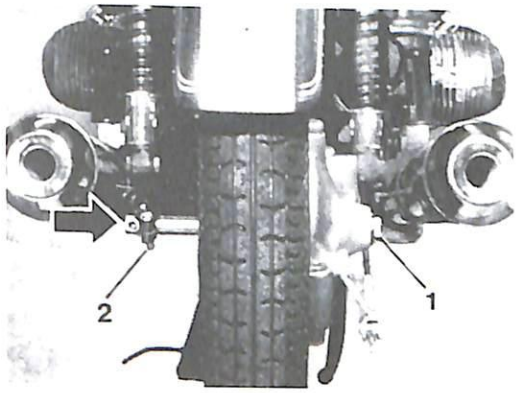

36 31 321 Spokes of one wheel (front or rear) – renewing

Remove (install) front wheel – 36 30 300
or
Remove (install) rear wheel – 36 30 320

The combined spoking gauge, BMW No. 36 3 850, is needed for the front or rear wheel. Wheel hubs obtained as spare parts have an oversize internal diameter which must be turned out to the nominal figure of 200 + 0.185 mm (7.874 + 0.0073 in) after spoking and centering. The hub must be mounted on the axle centerline and the surface skimmed to as fine a finish as possible. This will eliminate the distortion which is bound to occur in the wheel hub as a result of spoking. Maximum permissible runout of braking surface in relation to wheel hub is 0.02 mm (0.0008 in).

Place the wheel hub with bearing on the workbench with the brake drum side down. Push two spokes (crossing at the hub) with underlay washers through the hub; note that the spoke holes in the hub are at different heights.

■

Position the wheel rim so that the stamped mark on the inside of the rim shoulder is at the brake-drum side and the arrow points in the correct direction of forward travel. The pressed-in spoke nipple locating holes must point precisely in the direction of the spokes inserted into the hub. Note that the higher spoke must enter a higher hole on the rim, and the lower spoke a lower hole. Insert the remaining spokes similarly and install the nipples.

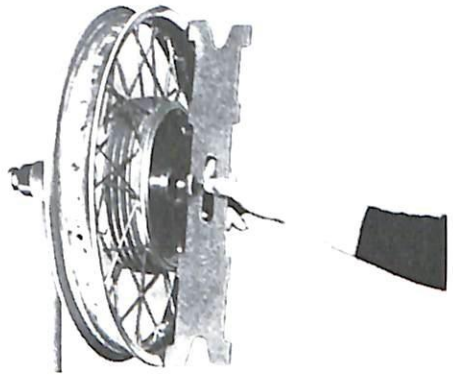

Tighten the nipples uniformly. Clamp wheel rim and hub with quick-release axle into special fixture BMW No. 36 3 600.

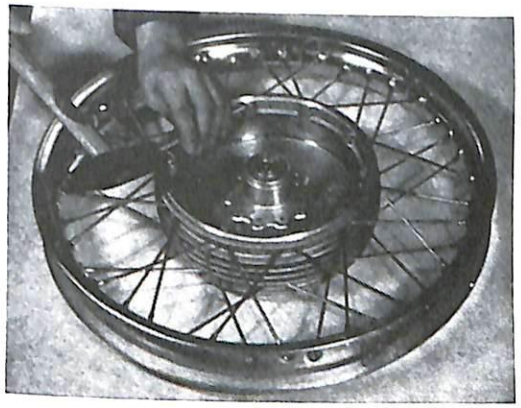

■

Check the distance from rim to hub with a spoking gauge offered up on the brake-drum side.

■

When installing: drive the spoke heads through fully with a suitable drift. Remove (install) rear wheel – 36 30 320.

■

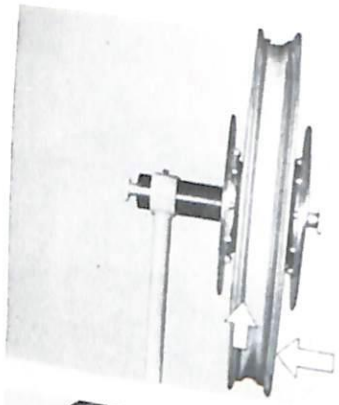

For maximum radial and lateral runout measured at the rim shoulder, see Specifications

Grind away any spoke ends which project too far, or else they will damage the inner tube.
Retension the spokes after the first 1000 km (600 miles). All wheels must be balanced after the tyre has been fitted.

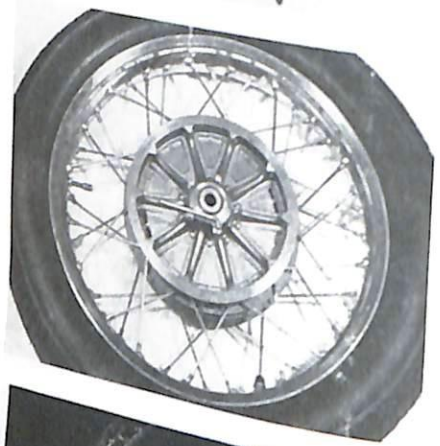

36 31 371 Wheel bearings of one wheel (front or rear) – renewing

Rear spoked wheel

Remove (install) rear wheel – 36 30 320.

Take out the Allen screws and set them aside together with the spring washers.

Remove the bearing cap with its lip-type seal and the pressure sleeve.

When installing: use the quick-release axle to center the bearing cap.

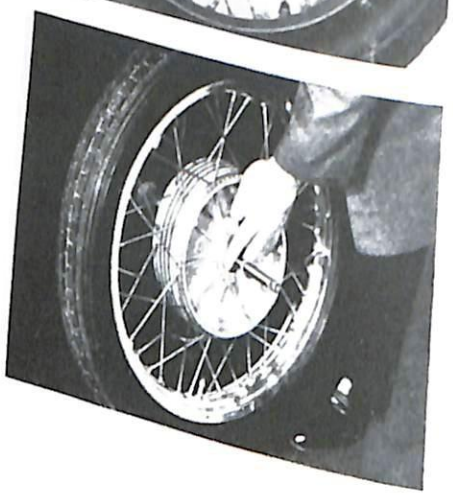

Heat the wheel hub. Insert the rear wheel quick-release axle with reducing bushing into the wheel bearings. Push hollow-drilled drift BMW No. 36 3 700 over the quick-release axle on the brake side.
Hold the hub on the left with one hand at the bearing cluster to prevent it from moving.
Knock the bearing out of the hub from the brake side.

Before installing the bearings in the hub again, check that they are free from play. To do this, clamp the rear wheel quick-release axle into the vice, using suitable jaws. Install the complete bearing cluster, consisting of the left pressure sleeve, the left taper roller bearing, the spacing ring, the inner spacing bushing, the outer spacing bushing, the right taper roller bearing and the right pressure sleeve. Install the spacing sleeve and the preload with the quick-release axle nut.
The correct bearing setting is when the outer spacing sleeve can just be moved to and fro between the hub and taper roller bearing outer races, but tends to stick (a tight sliding fit). Failing this, remachine the spacing ring or install another ring of a different thickness.
For tightening torque of quick-release axle nut, see Specifications.

Take off the equalizing sleeve, clean the bearings and fill them with grease (see Specifications).
Heat the wheel hub to app. 100° C (212° F) and insert the complete bearing cluster including the pressure sleeves. Remove the quick-release axle and the left pressure sleeve. Screw on the bearing cap (with the lip-type seal in position) tightly, using the quick-release axle for centering purposes. Install the left pressure sleeve.

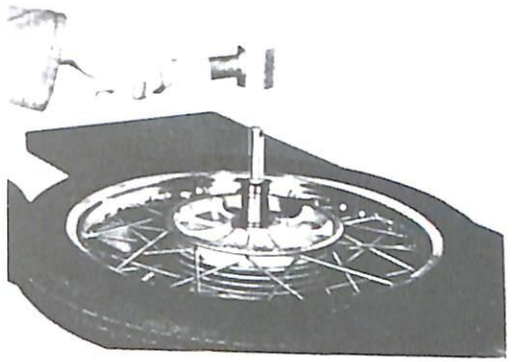

Check bearing adjustment with a torsiometer (friction tester). To do so, insert the quick-release axle into the wheel bearings and preload with the 85 mm (3.35 in) spacing sleeve and hex nut.
Place the friction tester with adapter and socket wrench insert on the quick-release axle nut.
For friction value and tightening torque, see Specifications.

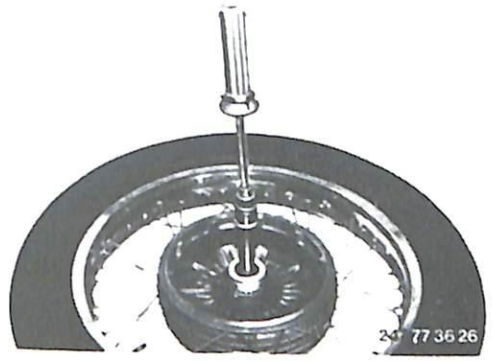

Rear cast alloy wheel (with disc brake)

Heat the wheel hub to app. 100° C (212° F). Remove the pressure sleeve on the brake disc side or the drive side, and pull out the lip-type seal with Kukko internal puller No. 21/4.
Take out the taper roller bearing.

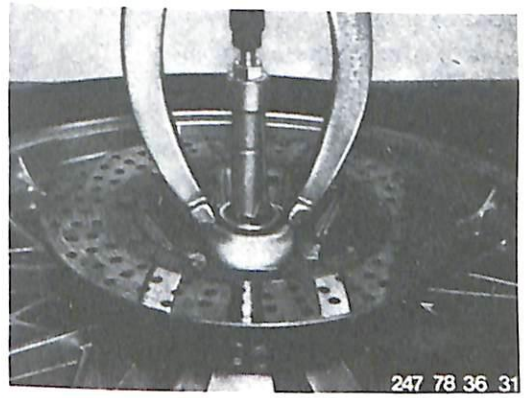

Using Kukko internal puller BMW No. 00 8 551, pull out the bearing shell and take out the spacing sleeve.

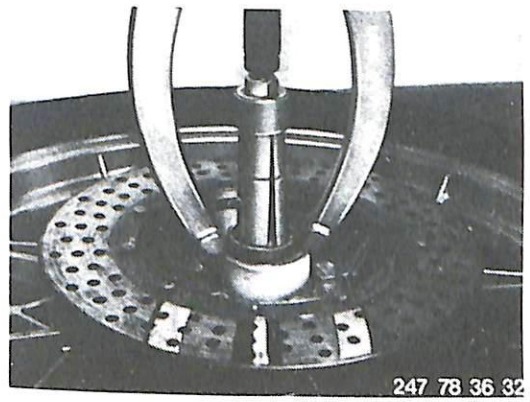

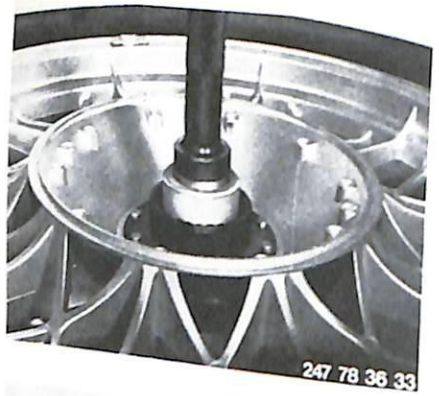

The bearing shells and sealing rins are pressed in with drift BMW No. 00 5 550, the hub must be heated to app. 100° C (212° F).

After pressing in, the sealing rings must be flush with the upper surface of the hub.

When installing: drive in the sealing rings before installing the pressure sleeves.

■

Front spoked wheel

Remove (install) front wheel – 36 30 300.

Unscrew end cap with pin wrench BMW No. 36 3 650.

■

Press the guide sleeve out of the end cap; force the bearing off the sleeve.

Heat the front wheel hub to app. 100° C (212° F) and knock out the bearing shells.

When installing: heat the bearing when pushing on to the guide sleeve.

■

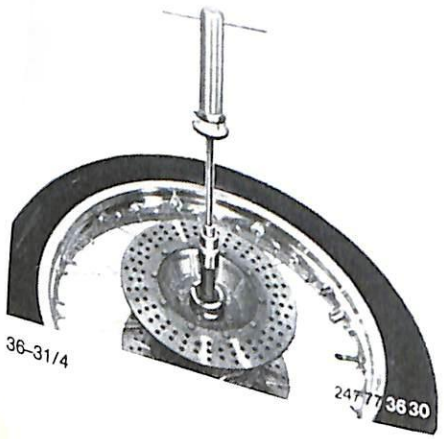

Place the quick-release axle through the wheel hub and preload the bearings with the 50 mm (2 in) spacing sleeve and the axle nut.

Mount the friction tester with adapter and socket wrench insert on the axle nut, and check the bearing adjustment.

For friction value and tightening torque, see Specifications.

Front cast alloy wheel

Unscrew end cap (1) with the pin wrench and take out taper roller bearing (2). There is a spacing ring (3) on the left side (looking forwards).
Note pressure sleeve (4).

■

Remove bearing shells with Kukko internal puller BMW No. 00 8 551, after heating the hub to app. 100° C (212° F).

To press in the bearing shell, use drift BMW No. 00 5 550.

247 78 36 34

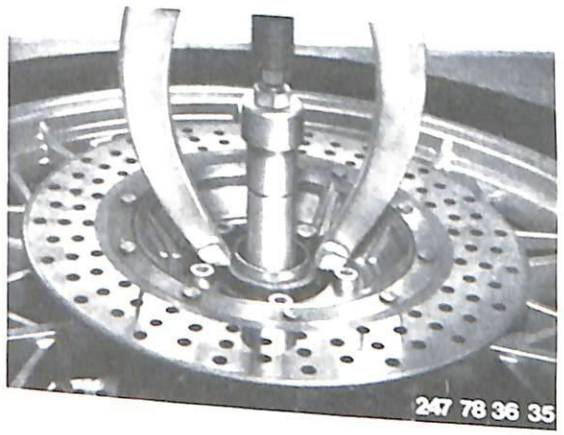

■

Front cast alloy wheel (without end cap)

Pull the pressure ring through the sealing ring to remove. Lever out the sealing ring with a screwdriver (arrow), and take out the taper roller bearing.

When installing: drive the sealing ring in until flush, using drift BMW No. 00 8 550.

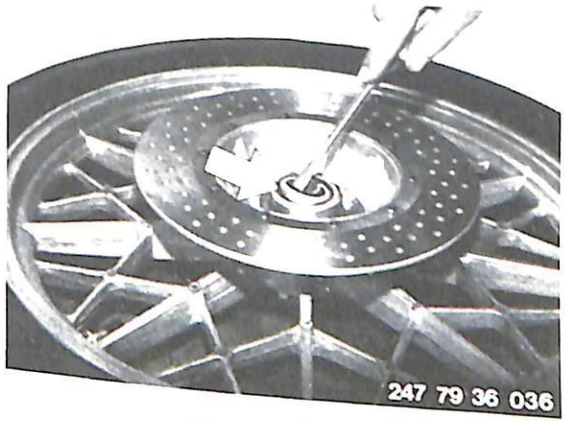

Pull the bearing shell out of the hub with Kukko puller BMW. No. 00 8 551.

When installing: heat the hub to app. 80° C (176° F) and drive in with drift BMW No. 00 8 550.

■

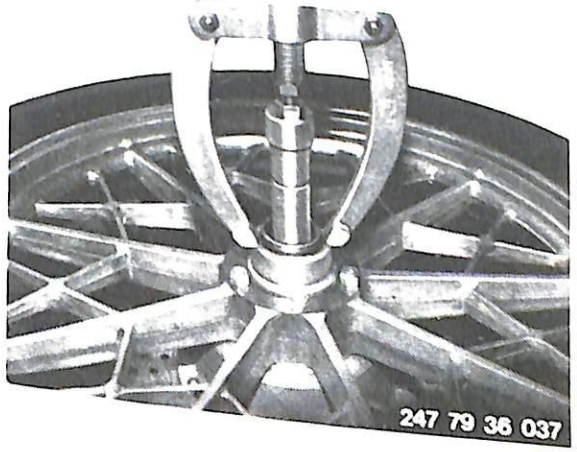

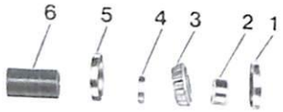

E 81 36 021

1 Sealing ring
2 Pressure element
3 Taper roller bearing
4 Spacing ring
5 Bearing shell
6 Spacer

46 Frame

		Page 46– 0/3
Specifications		46– 0/5
Specifications (1979 models)		46– 0/7
Specifications (1981 models)		46–51/1
46 51 040	Wheel track offset – measuring (with alignment gauge)	46–51/3
46 51 509	Front section of frame – checking	46–52/1
46 52 000	Center stand – removing and installing	46–52/2
46 53 000	Prop stand – removing and installing	46–61/1
46 61 000	Front mudguard – removing and installing	46–62/1
46 62 000	Rear mudguard – removing and installing	46–63/1
46 63 020	Cockpit fairing – removing and installing	46–63/2
46 63 031	Windshield for "Touring" integral fairing – removing and installing	46–63/2
46 63 031	Windshield for "Touring" integral fairing – removing and installing (1981 models)	46–63/3
46 63 105	Integral fairing – removing and installing	46–63/5
46 63 106	"Touring" integral fairing – removing and installing	46–63/7
46 63 120	Side section of integral or "Touring" integral fairing – removing and installing	46–63/8
46 63 201	Storage compartment – removing and installing	46–63/8
46 63 231	Ventilation outlet – removing and installing	46–63/9
	Troubleshooting – frame	

Frame

Technical Data

Model	R 60 7	R 75 7	R 80 7	R 100 7	R 100 S	R 100 RS
Frame	Double-loop tubular steel frame welded from oval tubes with bolted on rear frame section – not suitable for sidecars –					
Position of factory plate	on steering head, right gusset plate					
Position of frame number	on steering head, right gusset plate					
Motorcycle dimensions and weights Maximum width (engine) mm(in)	746 (29.37)					
Maximum height without mirror mm(in) (Motorcycle unladen)	1080 (42.5)				1210 (47.6)	1310 (51.6)
Saddle height, unladen mm(in)	810 (31.9)				820 (32.3)	
Maximum length mm(in)	2180 (85.8)					
Wheelbase mm(in)	1465 (57.7)					
Max. permissible non-alignment of front and rear wheels mm(in)	4 (0.16)					
Road clearance when loaded with 75 kg (165 lb) driver mm(in)	165 (6.5)					
Empty weight plus lubricants, without fuel and tools kg(lb)	195 (430)				200 (441)	210 (463)
Empty weight plus lubricants, full tank and tools kg(lb)	215 (474)				220 (485)	230 (507)
Permissible gross weight = empty weight plus rider and passenger and luggage kg(lb)	398 (877)					
Permissible wheel loadings Solo front at 27 psi (1.9 bar) kg(lb) rear at 28.5 psi (2.0 bar) kg(lb)	160 (353) 245 (540)					
Permissible wheel loadings with pillion passenger front at 28.5 psi (2.0 bar) kg(lb) rear at 32 psi (2.25 bar) kg(lb)	178 (392) 270 (595)					
Maximum capacity including rider	2 persons					

Tightening torques in Nm (lb. ft)

Securing bolts for rear frame section	25 (18.4)	Center stand securing bolts	43 – 48 (32 – 35)
Securing nuts for upper front wheel mudgard bracket	20 – 25 (14.7 – 18.4)		

All other nuts and bolts should be tighened to the values given in the tables issued by the manufacturers or the new BMW standards sheet 60002.0.

12 77 Alteration

11 78 Addition

Frame

Specifications – '79 models

Model	*R 80/7*	*R 100 T*	*R 100 S*	*R 100 RT*	*R 100 RS*
Frame	Double-loop tubular steel frame welded from oval tubes with bolted on rear frame section – not suitable for sidecars –				
Position of factory plate	on steering head, right gusset plate				
Position of frame number	on steering head, right gusset plate				
Motorcycle dimensions and weights Maximum width (engine) mm (in)	746 (29.37)				
Maximum height without mirror mm (in) (Motorcycle unladen)	1080 (42.5)			1210 (47.6)	1310 (51.6)
Saddle height, unladen mm (in)	810 (31.9)			820 (32.3)	
Maximum length mm (in)	2180 (85.8)				
Wheelbase mm (in)	1465 (57.7)				
Max. permissible non-alignment of front and rear wheels mm (in)	4 (0.16)				
Road clearance when loaded with 75 kg (165 lb) driver mm (in)	165 (6.5)				
Empty weigt plus lubricants, without fuel and tools kg (lb)	195 (430)			200 (441)	210 (463)
Empty weight plus lubricants, full tank and tools kg (lb)	215 (474)			220 (485)	230 (507)
Permissible gross weight = empty weight plus rider and passenger and luggage kg (lb)	398 (877)				
Permissible wheel loadings Solo front at 27 psi (1.9 bar) kg (lb) rear at 28.5 psi (2.0 bar) kg (lb)	160 (353) 245 (540)				
Permissible wheel loadings with pillion passenger front at 28.5 psi (2.0 bar) kg (lb) rear at 32 psi (2.25 bar) kg (lb)	178 (392) 270 (595)				
Maximum capacity including rider	2 persons				

Specifications (1981 models)

Model	R 100	R 100 CS	R 100 RT	R 100 RS
Frame	Twin loop, oval-section welded steel tube, with bolted-on rear section (not suitable for sidecar use)			
Location of manufacturer's plate	on steering head, right gusset plate			
Location of frame number	on steering head, right gusset plate			
Motorcycle dimensions and weights Overall width of engine mm (in)	746 (29.4)			
Max. height excl. mirror (motorcycle unladen) mm (in)	1080 (42.5)	1210 (47.6)	1465 (57.7)	1300 (51.2)
Height of seat, unladen mm (in)	820 (32.3)			
Overall length mm (in)	2210 (87.0)			
Wheelbase mm (in)	1465 (57.7)			
Max. permissible track offset mm (in)	4 (0.16)			
Ground clearance with 75 kg (165 lb) rider seated mm (in) – normal-load position	115 (4.53)			
Unladen weight incl. lubricants, without fuel and tools kg (lb)	198 (437)	200 (441)	217 (478)	210 (463)
Unladen weight incl. lubricants, 24 l (5.3 Imp., 6.3 US gal) of fuel and tools kg (lb)	218 (481)	220 (485)	237 (522)	230 (507)
Permissible gross weight = unladen weight plus rider/pillion passenger and luggage kg (lb)	440 (970)			
Max wheel loads with pillion passenger – front – rear	190 (419) 280 (617)			
Max. number of persons to be carried	2			

46 51 040 Track offset – checking (with alignment gauge)

Position motorcycle in track alignment gauge BMW No. 36 3 900. The gauge should be on the floor or on a hoist. Fold away the stops (1), pull in the bars (2), push the motorcycle into the gauge and rest it on its stand.

Stop No.	for:
36 3 904	Spoked rear wheel
36 3 905	Cast alloy wheel with drum brake
36 3 906	Cast alloy wheel with disc brake
36 3 908	Cast alloy wheel with drum brake, 1981 models
36 3 909	Cast alloy wheel with disc brake, 1981 models

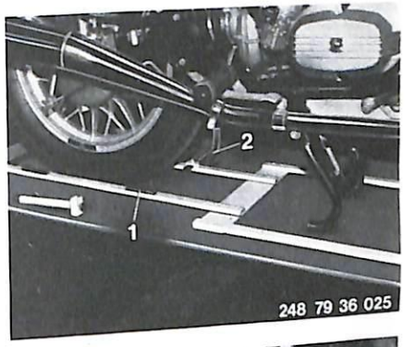

Raise the track aligning template on its legs to about axle or wheel-center height, with the adjustable legs to the rear. Unfold the stops and adjust the leg height so that the legs are touching only the wheel rims. To make this adjustment easier, raise the template slightly at the front. Release the bar lock, taking care not to let the assembly lurch forwards.

Force the template hard against the rear wheel from the right so that both stops are touching the rim.

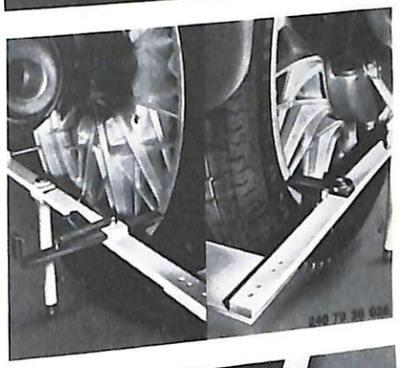

In order to measure track misalignment, the front wheel must be brought parallel to one of the two measuring rails. The distance between the front wheel rim and the measuring rail is measured at the front and back and from the right and left using a rule. The difference between the measurements, divided by two, gives the track alignment.

Example:

Left, front and rear	= 66 mm (2.60 in)
Right, front and rear	= 62 mm (2.44 in)

66 mm – 62 mm
(2.60 in – 2.44 in) =

$$\frac{4 \text{ mm (0.16 in) difference}}{2}$$

= 2 mm (0.08 in) track offset.

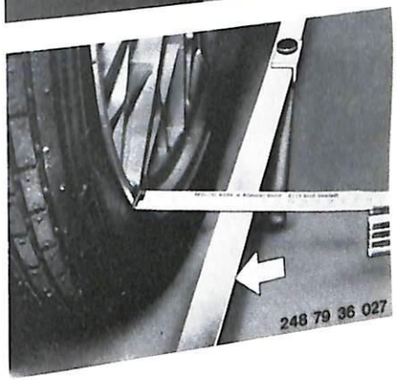

46 51 509 Front section of frame – checking

Remove (install) front forks 31 42 100.

The outer bearing races remain in the steering head. Remove (install) left and right carburettors.

■

Offer up frame alignment test gauge (arrow) BMW No. 46 5 600 to the steering head from below, and clamp the frame and gauge together with spindle (1) and nut (2).

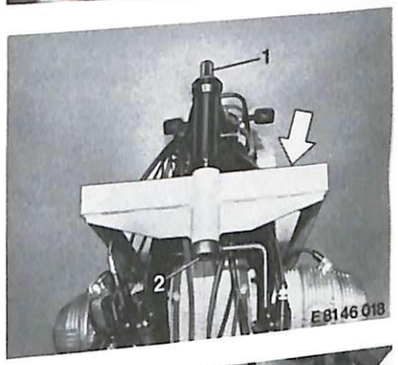

■

Insert the measuring arbors in the frame test gauge and align it so that the distance to the measuring disc is the same at left and right.

The frame is in good condition if the points of both measuring arbors are at approximately the same points within the tolerance circles at left and right (max. deviation 1 mm [0.04 in]).

46 52 000 Center stand – removing and refitting

Raise motorcycle under the oil sump so that the center stand hangs free.

247 77 46 10

■

Disconnect springs on the left and right of the center stand.

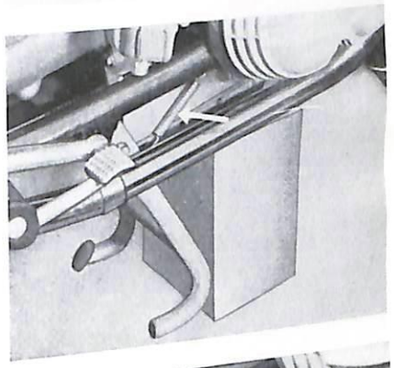

■

Unscrew hexagonal head bolt (arrow) on the left and right and withdraw center stand to the rear, paying attention to the spacer washers.

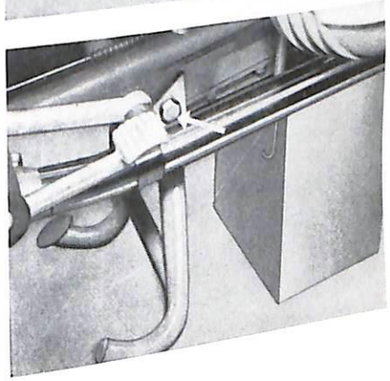

■

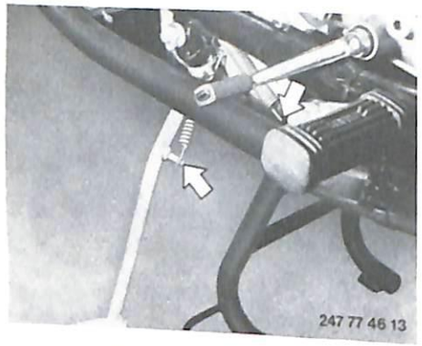

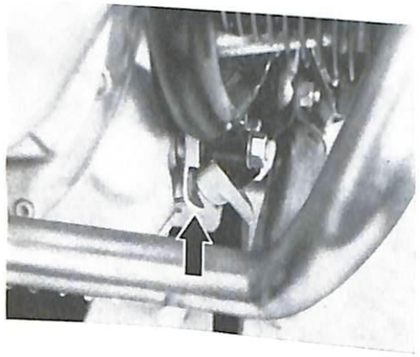

46 53 000 Side stand – removing and refitting

Disconnect springs for side stand and center stand.

On R 100 RS, detach left engine fairing.

■

Remove left hand hexagon nut of front engine mounting. Knock through the engine bolt so that the shackle (arrow) can be taken out.

Note when fitting: The shackle should be turned in such a way and secured so that the side stand automatically folds back into the normal position when the motorcycle is brought into the vertical position.

■

46 61 000 Front mudguard – removing and refitting

Front wheel – remove (36 30 300)

Remove the 2 hexagonal bolts on both sides of the metal section.

■

To renew mudguard without metal section, remove the 4 cap nuts at the mudguard.

When installing: do not forget rubber underlay washers.

■

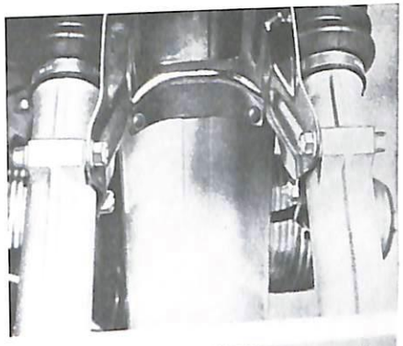

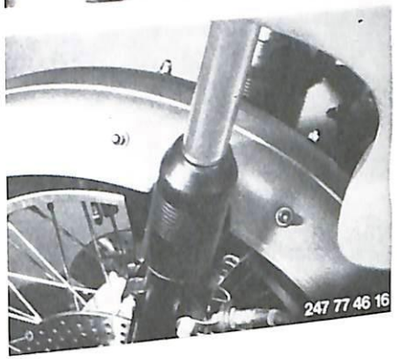

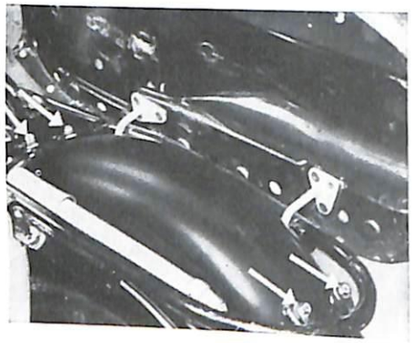

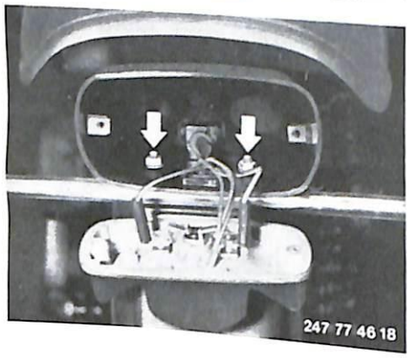

46 62 000 Rear mudguard – removing and refitting

Disconnect earth (ground) lead from the battery.

Fold up the dual seat, remove the 4 hexagonal bolts with washers, rubber washers and locknuts (arrows).

■

Remove the two Phillips screws of the rear light and remove the lens with reflector.

Unscrew securing bolts with washers and nuts (arrows) and take off rear light housing with turn indicator carrier from mudguard.

■

46 63 020 Cockpit fairing – removing and attaching

Disconnect battery earth (ground) lead. Remove 1 hex bolt at each holder on upper fork bridge.

Remove front turn indicator – 62 23 170.

■

Tilt the fairing forwards so that headlamp is freed.
Remove right rubber sleeve, carefully pull the cockpit fairing over the right turn indicator and push away from left turn indicator.

Warning: Fairing can break easily if spread too far. Disconnect cables at instrument panel and remove cockpit fairing.

■

46 63 031 Windshield – removing and installing

Drive pin out of rivet inwards with a suitable drift.
Pull out the rivet and take off the windshield.

■

The windshield is attached with BMW rivet insertion tool 00 9 510. Start with the center rivet, then work outwards to left and right. Insert expanding rivet through windshield and force shank through with insertion tool.

Note:

Do not forget the sealing washer.

■

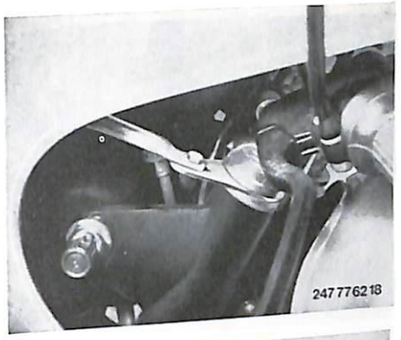

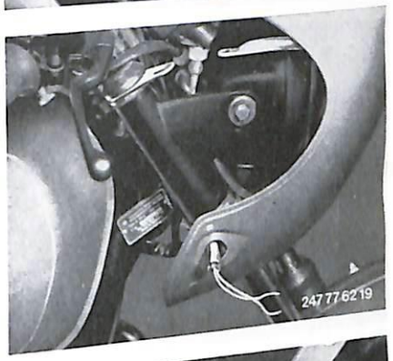

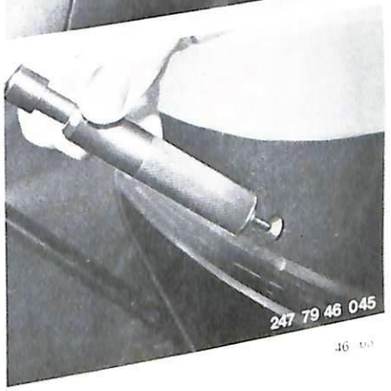

46 63 031 Windshield for 'Touring' integral fairing – removing and installing

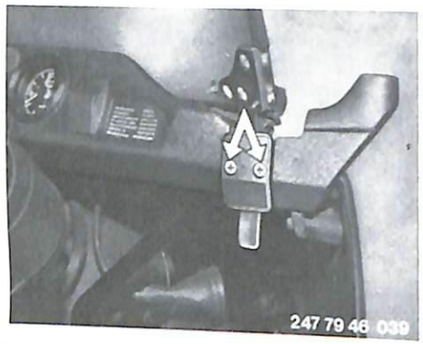

Use a Phillips-head screwdriver to unscrew and remove the left and right locking catches (arrows).

■

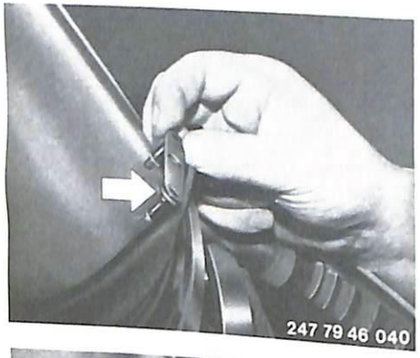

To remove the windshield holder first take off the parking (marker) light, then unscrew the two hex nuts from the inside, push back the rubber and pull out the windshield holder.

When installing:

Note O-rings (arrow) for windshield holder, do not overtighten the hex nuts.

■

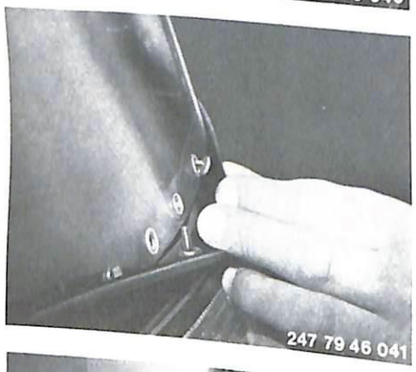

Detach rubber sealing strip from [illegible] remove windshield from panelling.

■

When installing:

Make sure that the plastic guide for the locating rod on the adjusting mechanism is correctly positioned. The thicker end (arrow) must face inwards.

■

46 63 031 Windshield for "Touring" integral fairing – removing and installing (1981 models)

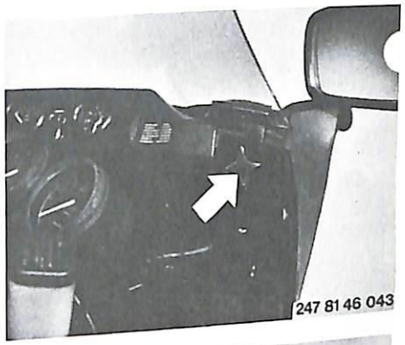

Unscrew star handle (arrow) and take off the underlay washer.

■

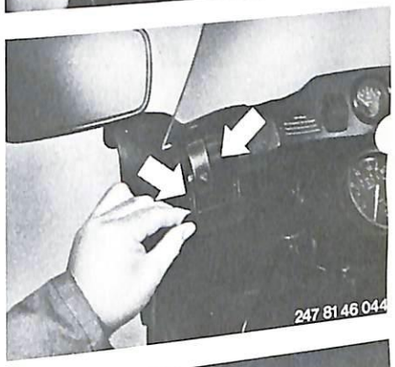

Unscrew the 2 hex bolts (arrows) and take off the baseplate.

■

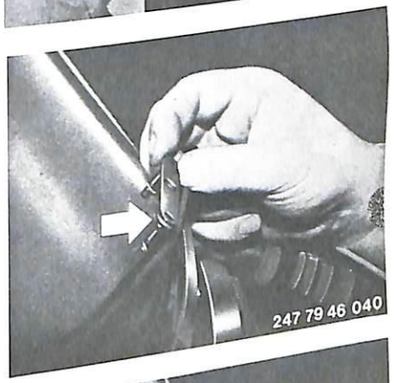

To release the glass holder, remove the marker light, then unscrew the two hex nuts from the inside, fold back the rubber and pull out the glass holder.

When installing: note the O-ring (arrow) when the glass holder is installed, do not overtighten the hex nuts.

■

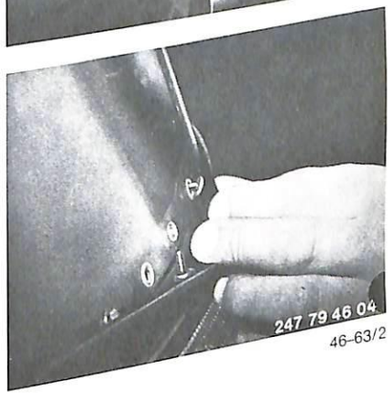

Detach the rubber sealing strip from the windshield and remove the windshield from the fairing.

46 63 105 Integral fairing – removing and installing

Detach the exhaust system 18 00 020
Remove the 9 Phillips-head screws from the center engine fairing, pull it down slightly, press to the rear at the top and remove.

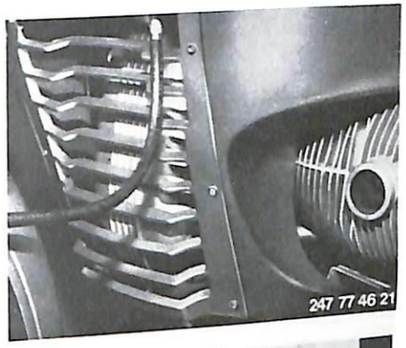

■

Remove one hex bolt (arrow) from engine fairing holder at left and right.

■

Remove one hex bolt (1) for cross-strut mounting and 5 self-tapping screws (5) from the upper fairing section, and take off the left and right engine fairings.

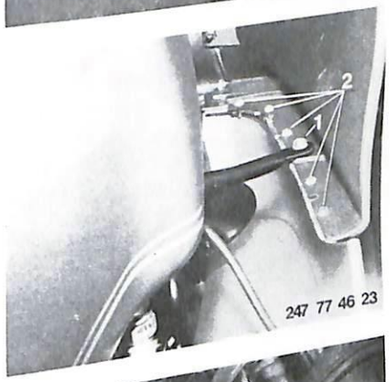

■

Pull sleeves out of screen panel, press down both brake lines with rubber sleeves, remove the 7 Phillips-head screws and take off the fairing section.

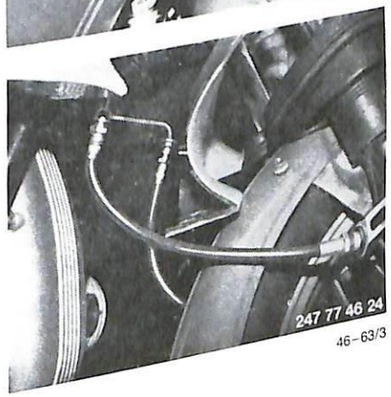

■

When installing: Secure sleeves with "Sicomet 8200" adhesive. Apply one drop at isolated points (arrows).

■

Before removing the fairing, pull right hex bolt, disconnect the 6-pin plug and remove the ignition switch from the instrument panel.

■

Remove the 4 hex nuts from the rearmost mirror and fairing mounting.

■

Loosen one hex bolt at the left and right lower fairing mounts (arrow). Grasp the fairing at the front left and right, and pull away forwards.

Note:

When installing plastic sections, tighten bolts and nuts carefully, since the threaded bushings can easily be pulled out or sections broken off.

■

46 63 106 'Touring' integral fairing – removing and installing

Detach the exhaust system ☞ 18 00 020.
Remove the 9 Phillips-head screws from the center of the engine panelling, pull it down slightly, press to the rear at the top and detach.

■

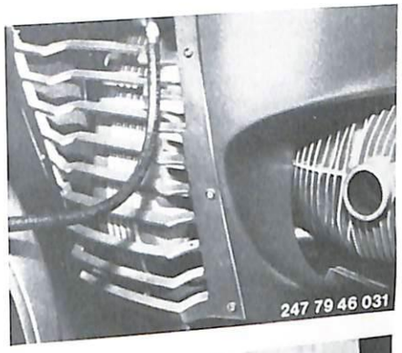

Remove left and right hex bolts (arrow) from engine panelling holders.

■

Remove hex bolt at each cross-strut fastening and the 3 screws in the air plenum chambers.
Detach the engine panelling at left and right.
To remove the hex bolts raise the plenum chambers slightly after removing the screws for the cover next to the plenum chamber (arrows).

■

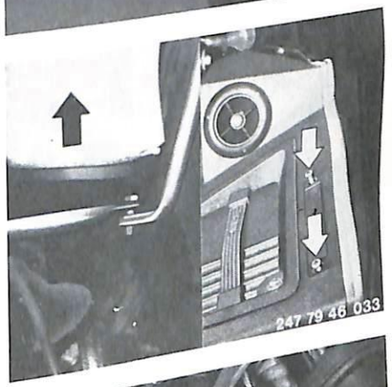

Pull sleeve out of screen panel and press out both brake lines with rubber grommets downwards. Remove the 7 Phillips-head screws and take off the panel.

■

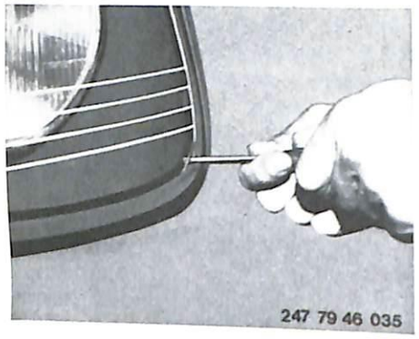

Press away the rubber surround at the corners of the front glass, and remove the Phillips-head screws

Caution: avoid damage to glass

Take off the glass and the light tunnel

Slacken the 2 hex bolts at the lower left and right of the central mount (arrow)

Separate the 6-pole connecting plug and detach the two cable straps (arrows)

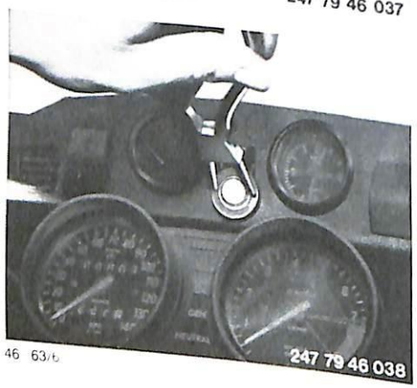

Unscrew circular nut at ignition switch with Seeger circlip pliers and press the ignition switch out of the instrument panel.

Slacken the two hex bolts at the top of the central mount
Pull the fairing away to the front

46 63 130 Side section of fairing – removing and installing

On RS:
Remove integral fairing – 46 63 105
Detach windshield – 46 63 031
Remove front flashing turn indicator – 63 13 150

On Touring model:
Remove 'Touring' integral fairing – 46 63 106
Detach windshield – 46 63 140
Detach mirror – 52 16 042
Remove air plenum chamber – 46 63 201
Remove front flashing turn indicator – 63 13 150
Place fairing on bench
Drill out hollow rivets for the length of the section to be replaced, using a power drill. Remove side section retaining screw (arrows) and detach side section

When installing:

First screw side section to fairing, then rivet instrument panel to side section. Use BMW rivet insertion tool 00 9 500. Insert tubular rivet through panel from the inside, hold block against it and screw head former into block from the outside

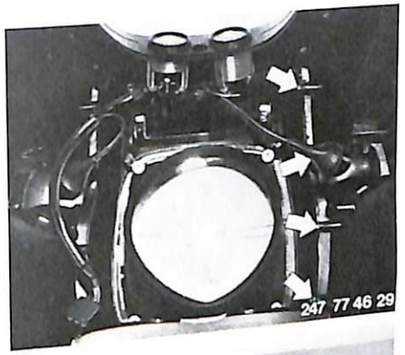

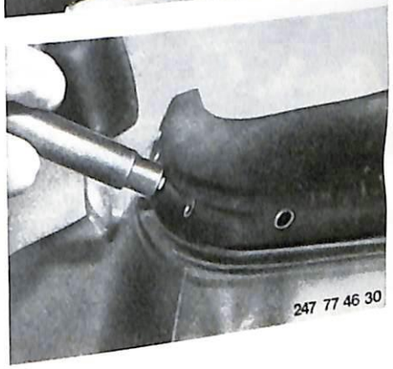

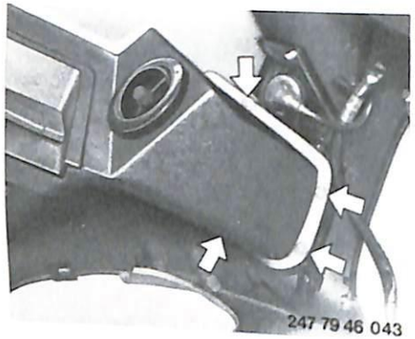

46 63 201 Air plenum chamber – removing and installing

Remove Touring integral fairing – 46 63 106

Remove the hexagonal screws (arrows) and take off the plenum chamber

■

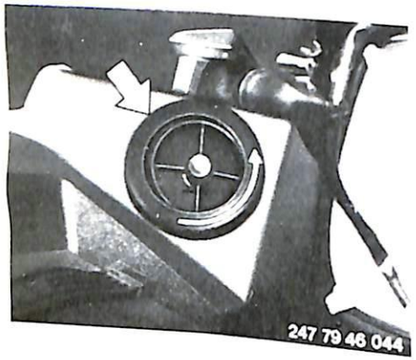

46 63 241 Air outlet – removing and installing

Remove the Touring integral fairing – 46 63 106

Remove the plenum chamber – 46 63 201

Remove the front ring (arrow) by hand and take out the air outlet.

■

Trouble-shooting – frame and suspension

Fault	Cause	Remedy
Telescopic forks sticking	Forks distorted	Unscrew quick-release axle and sheet metal pressing mount Compress forks fully several times Tighten bolts and nuts to correct torques
Unsteady straightline running	Defective steering head bearings	Renew
	Steering head bearings out of adjustment	Reset
	Tire or rim runout	Check vertical and lateral runout and renew affected items
	Defective wheel bearing	Renew or adjust
	Tire of wrong type or make	Renew (use only approved tire)
	Swinging arm bearing preload incorrect	Check setting, correct if necessary
	Defective swinging arm bearing	Renew and adjust
	One damper defective	Check dampers (install only dampers with approximately identical traction and compression stages)
	Track misalignment too great	Check and adjust if necessary (see Specifications)

51 Equipment

		Page
51 16 042	Mirrors – removing and installing	51–16/1
51 25 030	Steering lock – removing and installing	51–25/1
51 25 050	Dualseat lock – removing and installing	51–25/1
51 25 060	Lock barrel for dualseat lock – removing and installing	51–25/2

51 16 042 Mirror – removing and installing

Unscrew hex nut at base of mirror and pull mirror out upwards.

When installing:

Do not forget the spring when assembling the mirror.

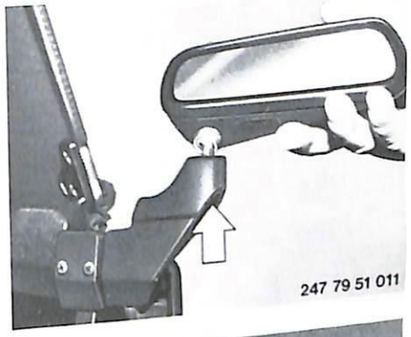

To remove the mirror base unscrew the hex bolt (arrow) and take off the base.

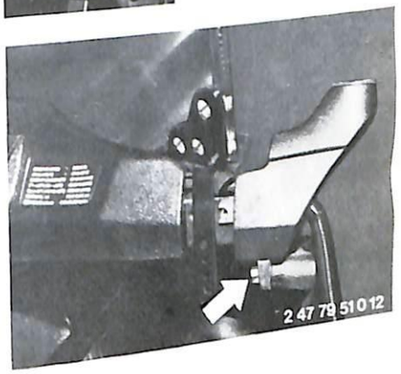

51 25 030 Steering lock – removing and installing

Lever off the cover plate (arrow) with a screwdriver.

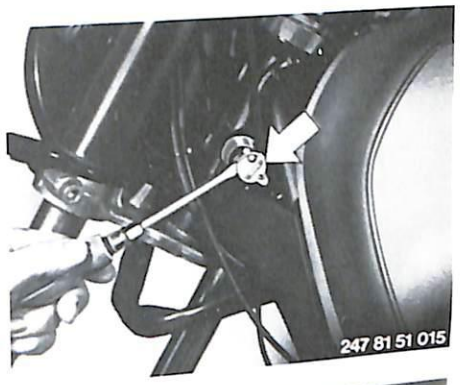

■

Insert key in lock and turn fully counterclockwise (to left).
Pull out the lock barrel.

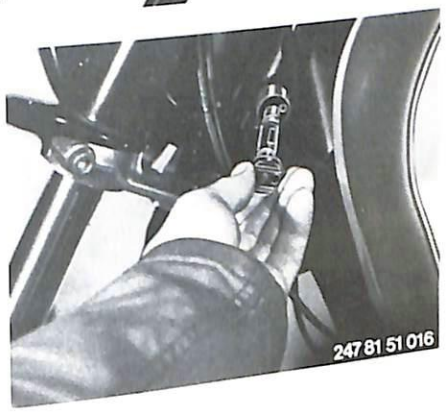

■

51 25 050 Dualseat lock – removing and installing

Take out both Phillips-head screws (arrows) and detach cover and lock housing.

When installing: insert the back screw loosely first, then the front screw. Make sure that the spring is correctly located.

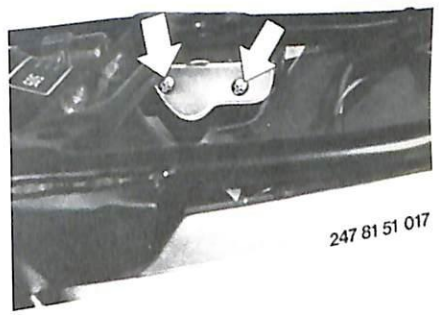

■

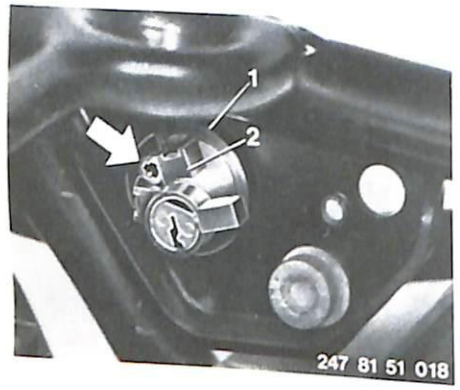

51 25 060 Lock barrel for dualseat lock – removing and installing

Remove (install) dualseat lock – 51 25 050.

Take out the Phillips-head screw (arrow). Pull the circlip (1) and the lock barrel (2) apart.

■

When installing: the lock barrel projection must locate in the groove on the lock plate (arrow).

■

52 Seats

52 53 000 Dualseat – removing and installing . . . . . Page 52-53.1

52 53 000 Dualseat – detaching and attaching

Remove keeper at rear [illegible] the dual seat, pull to the rear [illegible]

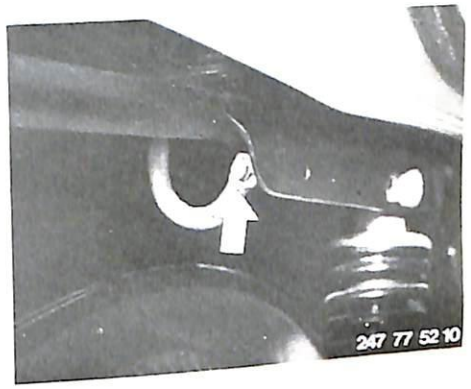

61 General electrical system

		Page
	Specifications	61- 0/3
	Specifications (1979 models) and circuit diagrams	61- 0/9
	Specifications (1981 models) and circuit diagrams	61-0/13
61 21 010	Battery – removing and installing	61-21/1
61 21 100	Battery holder – removing and installing	61-21/2
61 31 350	Flasher unit – removing and installing	61-21/2
61 31 367	Buzzer – removing and installing	61-21/2
61 31 400	Starter repeat lock relay/horn relay – removing and installing	61-31/1
61 33 000	Horn – removing and installing	61-33/1

Technical Data

General Vehicle Electrics

Model	R 60/7	R 75/7	R 80/7	R 100/7	R 100 S	R 100 RS
Horn	Fiamm 410 Hz					410 Hz 510 Hz
Battery (VARTA) Voltage	12					
Capacity Amp/h	28					
Polarity	negative earth (ground)					
Flasher unit (Hella)	T BB 21 1 — 4 21 W — 12 V					
Fuses (2)	8 Amp					

Key to wiring diagram – R 60/7 – R 100 S

Cable coding

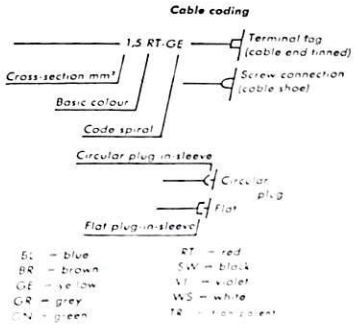

1 Turn indicator switch with starter button and emergency cutout
2 Headlight
  a) Flasher unit
  b) High beam
  c) Low beam
  d) Parking light
  e) Light relay
  f) Ignition – light switch
  g) Contact plate with fuses
3 Dimmer switch with headlight flasher and horn button
4
5 Front right turn indicator
6 Clutch operated switch
7 Front left turn indicator
8 Horn
9 Hydraulic hand brake switch
10 Combined instrument
  a) Speedometer illumination
  b) Revolution counter illumination
  c) Brake fluid level telltale (red)
  d) Neutral indicator (green)
  e) Charge indicator (red)
  f) Oil pressure telltale (orange)
  g) Turn indicator repeater (orange)
  h) Headlight high beam indicator (blue)
11 Starter relay
12 Coils
13 Spark plugs with caps
14 Condenser
15 Contact breaker
16 Oil pressure switch
17 Ground (earth)
18 Brake pedal stoplight switch
19 2 pin connection
20 Neutral indicator switch
21 Brake fluid level switch
22 4 pin connection
23 1 pin connection
24 Diode carrier
25 Battery
26 Starter
27 Alternator
28 Voltage regulator
29 Rear right turn indicator
30 Rear light
  a) Rear and license plate light
  b) Stop light
31 Rear left turn indicator
32 Voltmeter (R 100 S only)
33 Clock (R 100 S only)

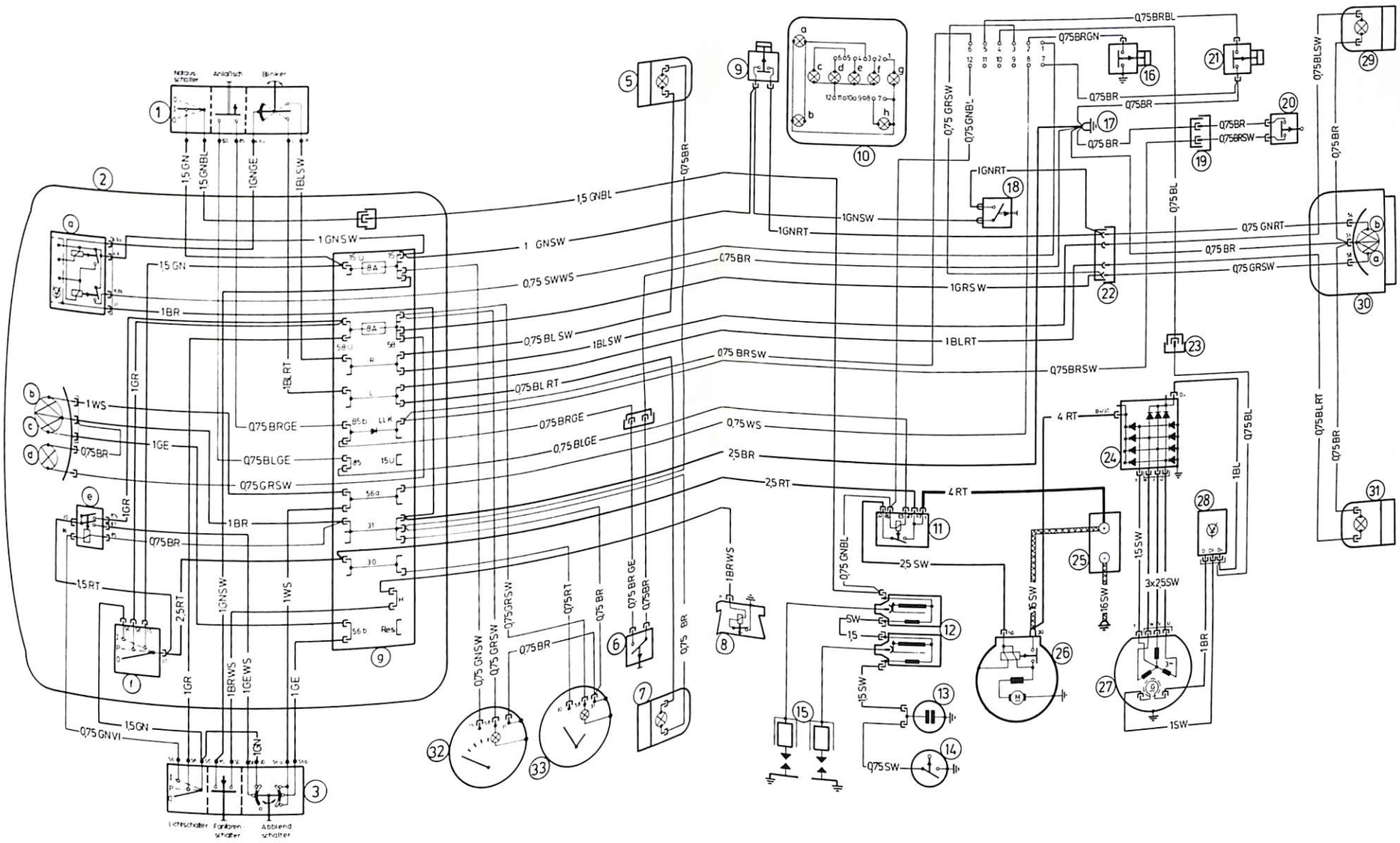
Nebelschalter
Anlaßschalter
Blinker
Lichtschalter
Fernlichtschalter
Abblendschalter
1,5 GN
1,5 GNBL
1GNGE
1BLSW
1GNSW
1 GNSW
0,75 SWWS
1BR
1GR
1BLRT
1WS
1GE
0,75 BRGE
0,75 BLGE
0,75 GRSW
0,75 BR
1,5 RT
2,5 RT
1BRWS
1GEWS
0,75 GNVI
0,75 BL SW
0,75 BL RT
0,75 BRSW
0,75 WS
2,5 BR
2,5 RT
0,75 BR GE
0,75 RT
0,75 GNSW
1BRWS
0,75 BRGN
0,75 BRBL
0,75 GRSW
0,75 GNBL
1GNRT
1GNSW
1GRSW
1BLRT
0,75 BRSW
0,75 BL
0,75 GNRT
0,75 BLSW
0,75 BLRT
4 RT
25 SW
1,5 SW
16 SW
3x2,5 SW
1SW
0,75 SW

Key to electrical wiring diagram – R 100 RS

Cable coding

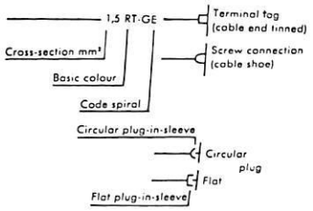

BL	= blue	RT	= red
BR	= brown	SW	= black
GE	= yellow	VI	= violet
GR	= grey	WS	= white
GN	= green	TR	= transparent

1 *Turn indicator switch with starter button and emergency cutout*
2 *Headlight*
  a) *Flasher relay*
  b) *High beam*
  c) *Low beam*
  e) *Light relay*
  g) *Contact board with fuses*
3 Low beam (dip) switch with headlight flasher and horn push
4 Ignition and light switch
5 Front right turn indicator
6 Clutch-operated switch
7 Front left turn indicator
8 Left horn
9 Hydraulic hand brake lever switch
10 Combined instrument
  a) Speedometer dial lighting
  b) Revolution counter dial lighting
  c) Brake fluid level telltale (red)
  d) Neutral telltale (green)
  e) Battery charge telltale (red)
  f) Oil pressure telltale (orange)
  g) Turn indicator repeater (orange)
  h) Headlight high beam telltale (blue)
11 Starter relay
12 Coils
13 Condenser
14 Ignition contact breaker
15 Spark plugs and caps
16 Oil pressure contact switch
17 Earth (ground)
18 Brake pedal (stop light) switch
19 2-pin connector
20 Neutral contact switch
21 Brake fluid level sensing switch
22 4-pin connector
23 1-pin connector
24 Diode carrier
25 Battery
26 Starter
27 Alternator
28 Voltage regulator
29 Rear right turn indicator
30 Rear light
  a) Rear and license plate light
  b) Brake light
31 Left rear turn indicator
32 Voltmeter
33 Clock
34 Horn relay
35 6-pin plug connector
36 Right horn
37 Front parking/marker light

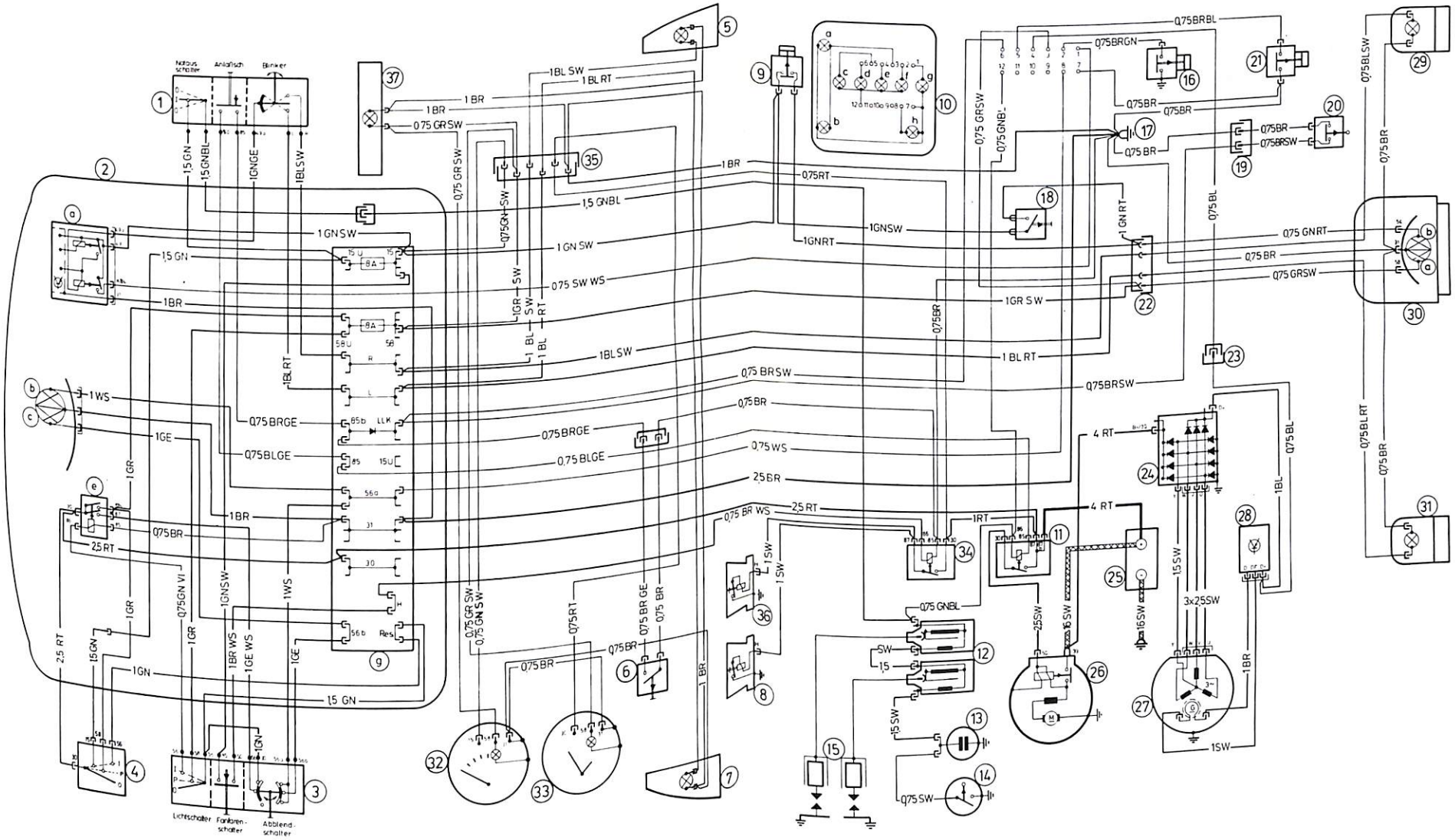
Notaus schalter
Anlaßsch
Blinker
Lichtschalter
Fanfaren-schalter
Abblend-schalter
1,5 GN
1,5 GNBL
1GNGE
1BLSW
1 BR
0,75 GR SW
1BL SW
1 BL RT
1,5 GNBL
1GNSW
1 GN SW
0,75 SW WS
1GR SW
1BLSW
1 BL RT
0,75 BRSW
0,75 BR
0,75 WS
25 BR
25 RT
0,75 BRGE
0,75 BLGE
1 WS
1GE
1GR
0,75 BR
25 RT
0,75 BR WS
1GNRT
0,75 GNBL
0,75 GRSW
0,75 GNBL
0,75 BRGN
0,75 BRBL
0,75 BR
0,75 BRSW
0,75 BL
1 GN RT
0,75 GNRT
0,75 BR
0,75 GRSW
0,75 BLSW
0,75 BLRT
0,75 BR
4 RT
1 BL
1 RT
1 SW
1,5 SW
3x2,5SW
2,5SW
1,6SW
1,6SW
1 BR
0,75 SW
0,75 GR SW
0,75 GN SW
0,75 RT
0,75 BR GE
0,75 BR
1 BR
1 GN
1,5 GN
1BR WS
1GE WS
0,75 GN VI
2,5 RT
1,5 GN
1 GR
1 BL RT
1 BL SW
1 BL
8A
15 U
56 b
Res.
30
31
56 a
65 b
LLK
15 U
R
L
58 U
58
1 SW
1,5 SW
0,75 SW
1,5 SW
1 SW
1 BR

Key to electrical circuit diagram
R 60/7 – R 100 S – model 78

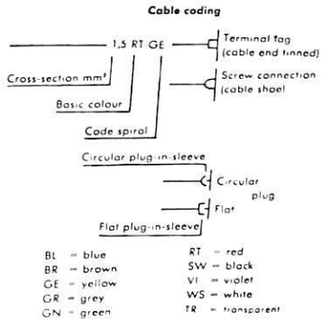

1 Turn indicator switch with starter contact and emergency cutout
2 Headlight
  a) Flasher unit
  b) High beam
  c) Low beam
  d) Parking light
  e) Lighting relay
  f) Ignition and light switch
  g) Contact board with fuses
3 Low beam (dip) switch with headlight flasher and horn switch
4 Front right flashing turn indicator
5 2-pin plug
6 Clutch-operated switch
7 Voltmeter (R 100 S only)
8 Clock (R 100 S only)
9 Front left flashing turn indicator
10 Horn
11 Hydraulic handbrake lever switch
12 Instrument cluster
  a) Speedometer dial illumination
  b) Revolution counter dial illumination
  c) Brake fluid telltale (red)
  d) Neutral indicator (green)
  e) Battery charge telltale (red)
  f) Oil pressure telltale (orange)
  g) Turn indicator repeater (green)
  h) Headlight high beam telltale (blue)
13 Foot brake light switch
14 Starter relay
15 Relay
16 Coils
17 Spark plugs with caps
18 Condenser
19 Contact breaker
20 Starter
21 Battery
22 Alternator
23 Regulator
24 Diode board
25 Single-pole connector
26 2-pole connector
27 Buzzer
28 6-pole connector
29 Neutral telltale switch
30 2-pole connector
31 Brake fluid level telltale switch
32 Oil pressure sensing switch
33 Rear right flashing turn indicator
34 Rear light cluster
  a) Brake light
  b) Rear and license plate light
35 Rear left flashing turn indicator

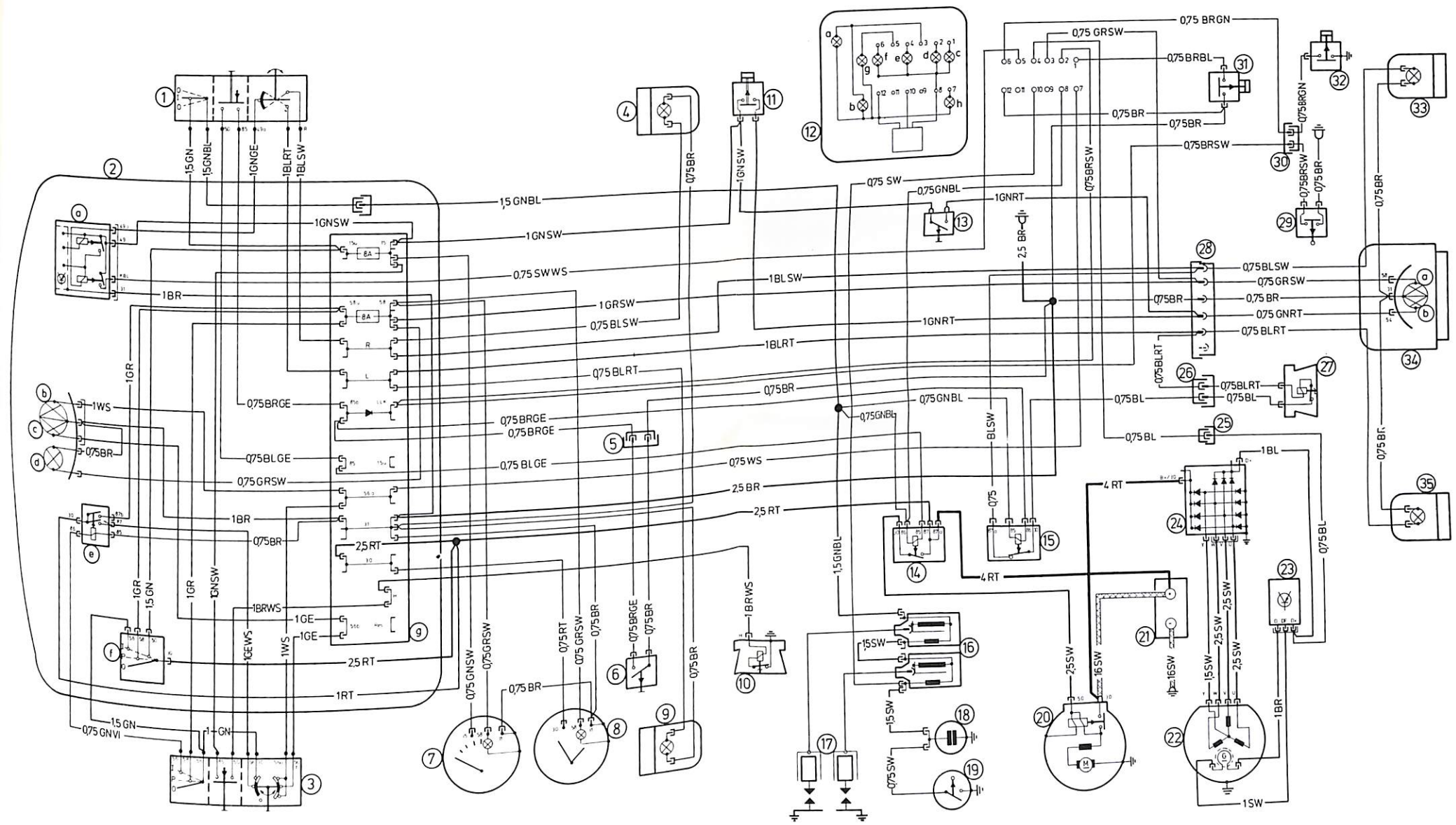
1,5 GN
1,5GNBL
1GNGE
1BLRT
1BLSW
1,5 GNBL
1GNSW
1GN SW
0,75 SWWS
1BR
1GRSW
0,75 BLSW
1BLRT
0,75 BLRT
0,75BRGE
0,75BRGE
0,75BRGE
0,75BLGE
0,75 BLGE
0,75GRSW
1BR
0,75BR
2,5 RT
1GR
1,5 GN
1GR
1GNSW
1BRWS
1GE
1GE
1GEWS
1WS
2,5 RT
1RT
1,5 GN
0,75 GNVI
1 GN
0,75GNSW
0,75GRSW
0,75 BR
0,75RT
0,75 GRSW
0,75BR
0,75BRGE
0,75BR
0,75BR
1BRWS
1,5GNBL
0,75 SW
0,75GNBL
1GNRT
2,5 BR
0,75GNBL
0,75GNBL
BLSW
0,75
1,5SW
1,5SW
0,75SW
0,75 GRSW
0,75 BRGN
0,75BRBL
0,75 BR
0,75BR
0,75BRSW
0,75BRSW
0,75BRGN
0,75BRSW
0,75BR
0,75BR
0,75BLSW
0,75 GRSW
0,75 BR
0,75 GNRT
0,75 BLRT
0,75BLRT
0,75BLRT
0,75BL
0,75BL
0,75 BL
0,75 BL
0,75 BR
0,75 BR
1BL
4 RT
4 RT
2,5 SW
16SW
16SW
2,5 SW
2,5 SW
1,5SW
2,5 SW
1BR
1SW

Key to electrical circuit diagram
R 100 RS – model 78

Cable coding

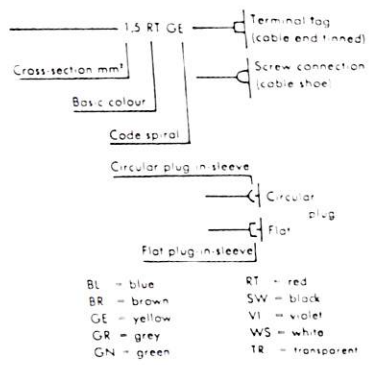

1 Turn indicator switch with starter contact and emergency cutout
2 Headlight
  a) Turn indicator relay
  b) High beam
  c) Low beam
  d) Lighting relay
  e) Contact board with fuses
3 Ignition and lighting switch
4 Low beam (dip) switch with headlight flasher and horn switch
5 Front marker light
6 6-pin connector
7 Front right flashing turn indicator
8 2-pin connector
9 Voltmeter
10 Clock
11 Clutch operated switch
12 Front left flashing turn indicator
13 Left horn
14 Horn relay
15 Right horn
16 Hydraulic handbrake light switch
17 Instrument cluster
  a) Speedometer dial illumination
  b) Revolution counter illumination
  c) Brake fluid level telltale (red)
  d) Oil pressure telltale (orange)
  e) Battery charge telltale (red)
  f) Neutral indicator (green)
  g) Turn indicator repeater (green)
  h) Headlight high beam telltale (blue)
18 Brake pedal light switch
19 Starter relay
20 Coils
21 Spark plugs with caps
22 Condenser
23 Contact breaker
24 Relay
25 Starter
26 Battery
27 Alternator
28 Regulator
29 Diode board
30 1-pin plug
21 2-pin plug
32 6-pin plug
33 Brake fluid level sensing switch
34 2-pin connector
35 Neutral indicating switch
36 Oil pressure sensing switch
37 Rear right flashing turn indicator
38 Rear light cluster
  a) Rear and license plate light
  b) Brake light
39 Buzzer
40 Rear left flashing turn indicator

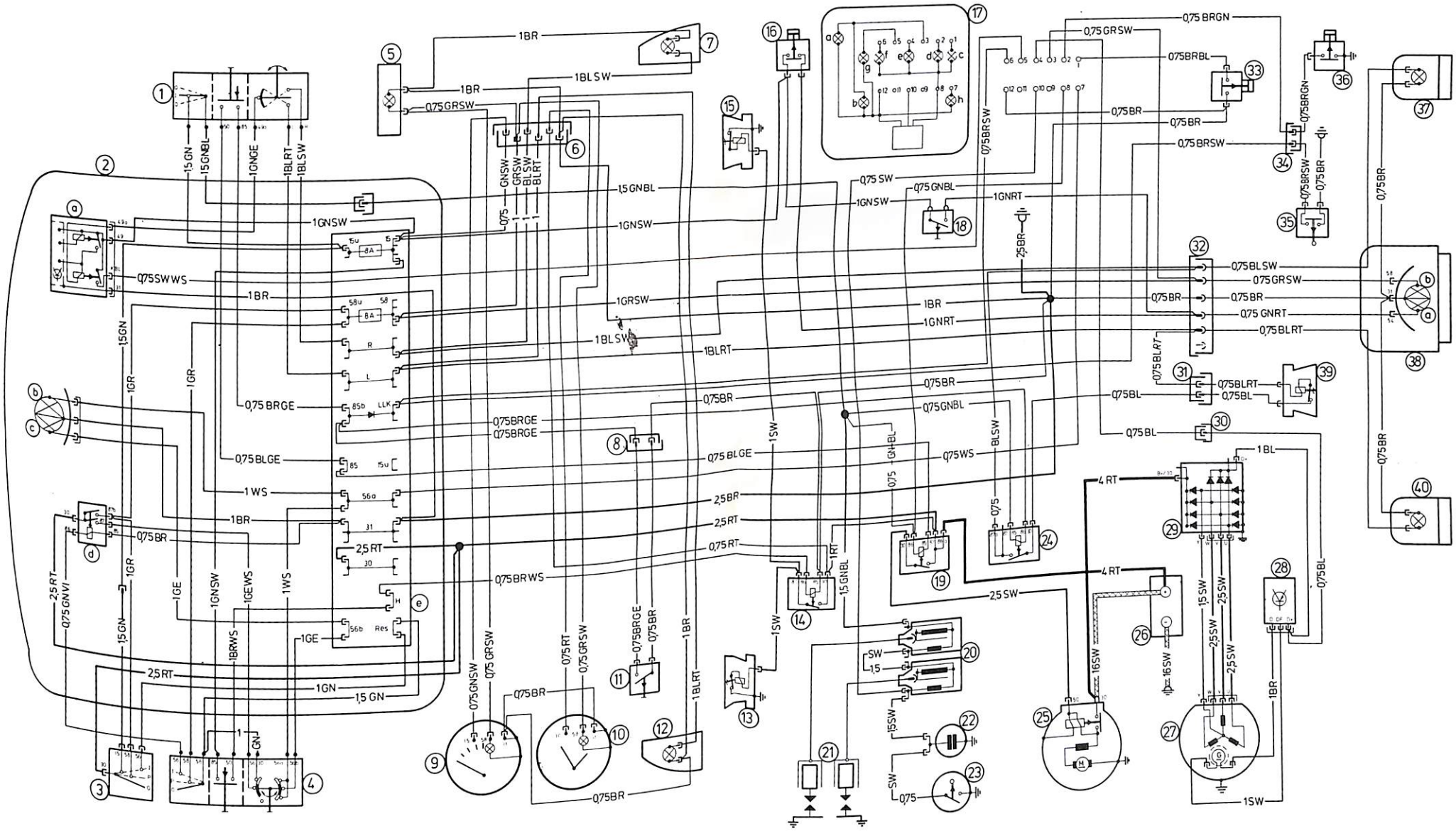
1BR
1BLSW
0,75GRSW
1,5GN
1,5GNBL
1GNGE
1BLRT
1BLSW
GNSW
GRSW
BLSW
BLRT
0,75
1,5GNBL
1GNSW
0,75SWWS
1BR
1GRSW
1BLSW
1BLRT
1GR
0,75BRGE
0,75BLGE
1WS
2,5RT
0,75GNVI
1GE
1GNSW
1GEWS
1BRWS
1GN
1,5GN
0,75BRWS
0,75GNSW
0,75GRSW
0,75BR
0,75RT
1SW
1,5GNBL
0,75WS
BLSW
2,5BR
2,5SW
4RT
1BL
0,75BL
16SW
1,5SW
2,5SW
0,75BRSW
0,75BRGN
0,75BRBL
0,75BLSW
0,75GNRT
0,75BLRT
0,75GNBL
1GNRT
0,75SW
1,5SW
0,75

Specifications (1979 models)

Model	R 80/7	R 100 T	R 100 S	R 100 RT	R 100 RS
Horn	Fiamm 410 Hz	410 HZ 510 HZ			
Battery Voltage V	VARTA 12				
Capacity Amp/h	28				
Earth (ground) polarity	negative				
Flashing turn indicator unit	HELLA TBB 26 1 – 4 x 21 W – 12 V				
Fuses	2 x 8 Amp				

Key to electrical circuit diagram R 80/7 – R 100 S (1979 models)

Circuit identification:

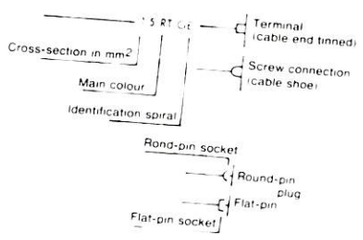

BL = blue
BR = brown
GE = yellow
GR = grey
GN = green
RT = red
SW = black
VI = violet
WS = white
TR = transparent

1 Starter contact and emergency cutout ("kill") switch
2 Headlight
  a) Flasher unit
  b) High beam
  c) Low beam
  d) Parking light
  e) Light relay
  f) Ignition/light switch
  g) Contact board with fuses
3 Dip switch with headlight flasher, horn and turn indicator switches
4 Front right flashing turn indicator
5 2-pin plug connector
6 Clutch-operated switch
7 Voltmeter (R 100 T and R 100 S only)
8 Clock (R 100 T and R 100 S only)
9 Front left flashing turn indicator
10 Horn
11 1-pin plug connector (US models only)
12 Hand brake light switch, hydraulic
13 Instrument cluster
  a) Speedometer dial light
  b) Revolution counter dial light
  c) Brake fluid telltale
  d) Neutral indicator (green)
  e) Charge telltale (red)
  f) Oil pressure telltale (orange)
  g) Turn indicator repeater (green)
  h) High beam telltale (blue)
14 Starter relay
15 Relay for buzzer
16 1-pin plug connector
17 Coils
18 Spark plugs with caps
19 Contact breaker with condenser
20 Starter motor
21 Socket (R 100 T only)
23 Battery
24 Alternator
25 Regulator
26 Diode board
27 1-pin plug connector
28 Diode (US models only)
29 Foot brake light switch
30 2-pin plug connector
31 1-pin plug connector (US models only)
32 Brake fluid level switch
33 Oil pressure sensing switch
34 2-pin plug connector
35 Neutral indicating switch
36 6-pin connector
37 2-pin connector
38 Buzzer
39 Left rear flashing turn indicator
40 Rear light
  a) Brake light
  b) Rear and licence plate light
41 Right rear flashing turn indicator

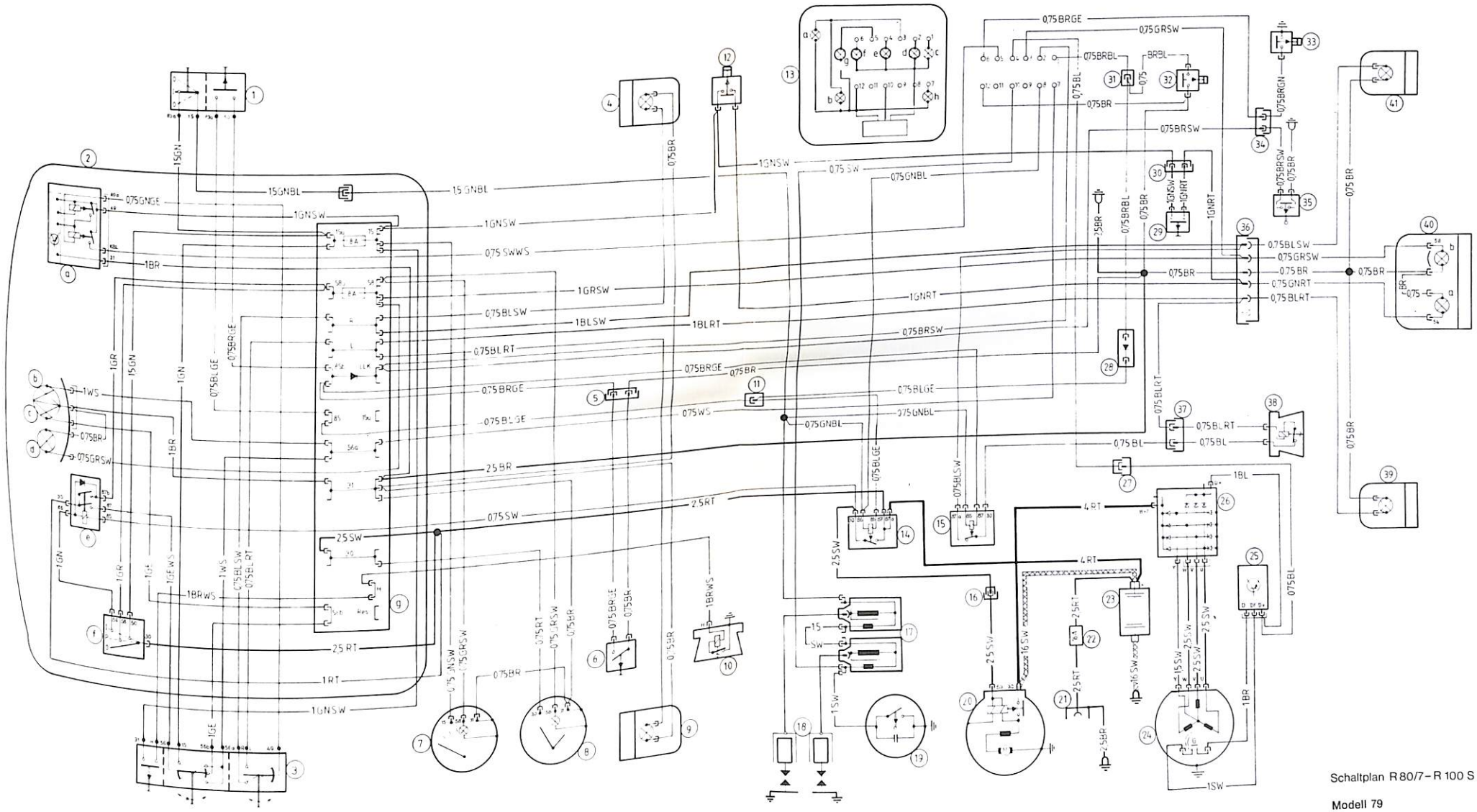

Schaltplan R 80/7 – R 100 S

Modell 79

Key to electrical circuit diagram R 100 RT and R 100 RS (1979 models)

Circuit identification:

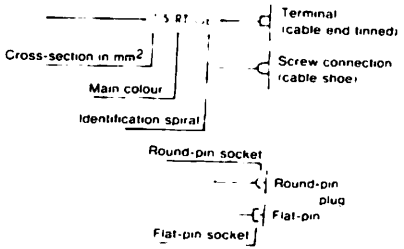

BL = blue	RT = red
BR = brown	SW = black
GE = yellow	VI = violet
GR = grey	WS = white
GN = green	TR = transparent

1 Switch with starter contact and emergency cutout ("kill") switch
2 Headlight
  a) Flasher unit
  b) High beam
  c) Low beam
  d) Light relay
  e) Contact board with fuses
  f) Relay for fog light
  g) Relay for auxiliary driving light
3 Ignition/light switch
4 Combined switch, with headlight flasher, horn and flashing turn indicator switches
5 Front marker light
6 6-pin plug connector
7 Front right flashing turn indicator
8 2-pin plug connector
9 Voltmeter
10 Clock
11 Clutch-operated switch
12 Front left flashing turn indicator
13 Left horn
14 Right horn
15 Hand brake light switch, hydraulic
16 Instrument cluster
  a) Speedometer dial light
  b) Revolution counter dial light
  c) Brake fluid telltale (red)
  d) Neutral indicator (green)
  e) Charge telltale (red)
  f) Oil pressure telltale (orange)
  g) Turn indicator repeater (green)
  h) High beam telltale (blue)
17 Foot brake light switch
18 Starter relay
19 Coils
20 Spark plugs with caps
22 Contact breaker
23 Relay for buzzer
24 Starter motor
25 Battery
26 Alternator
27 Regulator
28 Diode board
29 1-pin plug connector
30 2-pin plug connector
31 6-pin plug connector
32 Brake fluid level switch
33 2-pin plug connector
34 Neutral indicating switch
35 Oil pressure sensing switch
36 Right rear flashing turn indicator
37 Rear light
  a) Rear and licence plate light
  b) Brake light
38 Buzzer
39 Left rear flashing turn indicator
40 3-pin plug connector (R 100 RT only)
41 Fog light (option)
42 Limit switch (not on US models)
43 Fog light switch (R 100 RT only)
44 3-pin plug connector (R 100 RT only)
46 Auxiliary driving light (option)
47 Limit switch (not on US models)
48 3-pin plug connector (R 100 RT only)
49 Rear brake fluid level switch
50 Line fuse (R 100 RT only)
51 Socket (R 100 RT only)
52 2-pin plug connector
53 1-pin plug connector (US models only)
54 Diode (US models only)
55 1-pin plug connector (US models only)

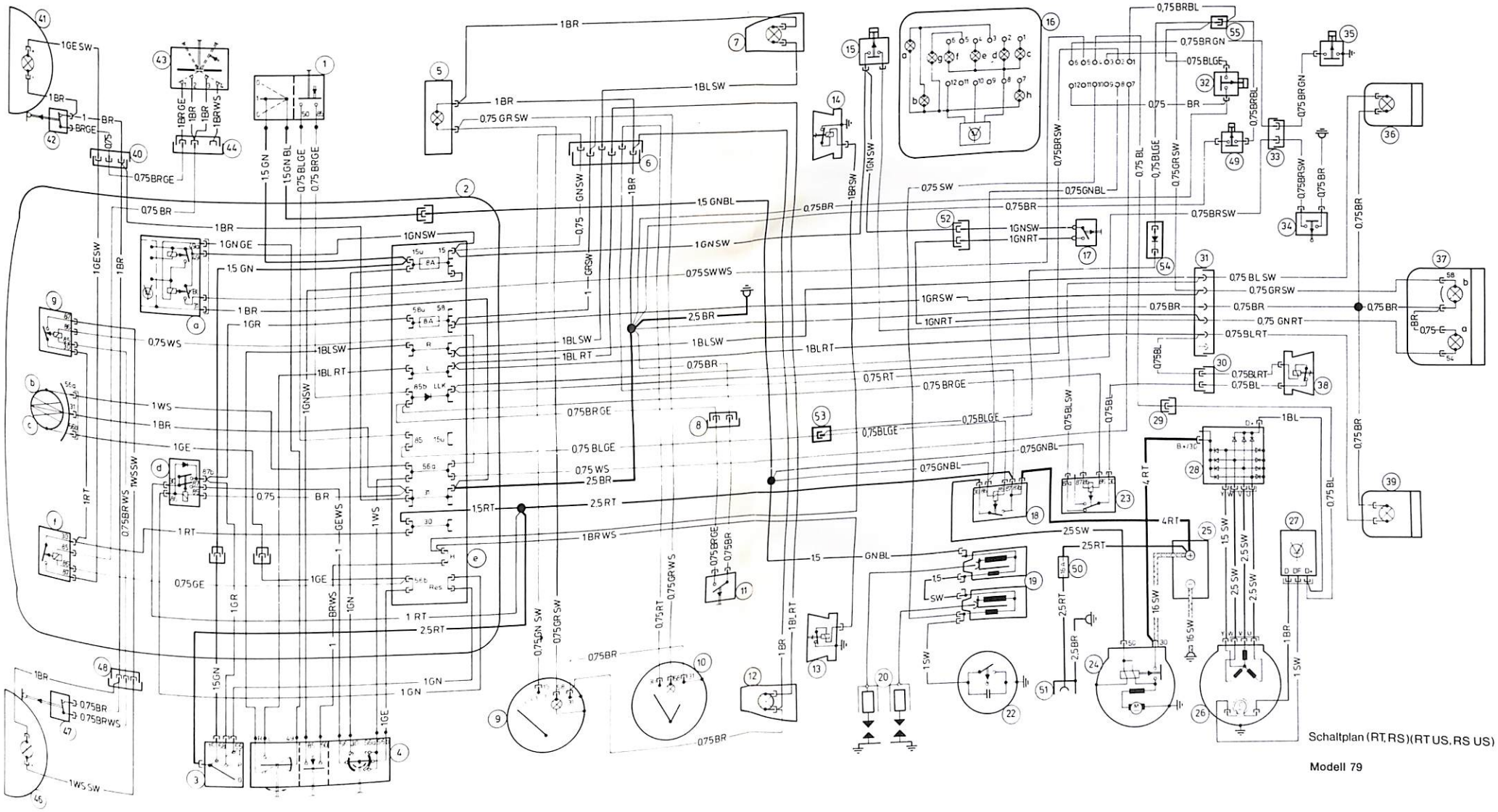

Schaltplan (RT, RS) (RT US, RS US)

Modell 79

General electrical system

Specifications (1981 models)

Model	R 100	R 100 CS	R 100 RT	R 100 RS
Horn	Fiamm 410 Hz	Fiamm 410 Hz 510 Hz		
Battery Voltage V	BMW Mareg 12			
Capacity Amp/h	28			
Earth (ground) polarity	negative			
Flashing turn indicator unit	HELLA TBB 53 DOT 2 (4) x 21 W + 0.5 W 12 V			
Fuses	2 x 8 Amp			

Key to electrical circuit diagram
BMW R 100 RT, R 100 S (1981 models)

1 Starter contact and emergency cutout ("kill") switch
2 Headlight
  a) Flasher unit
  b) High beam
  c) Low beam
  d)
  e) Light relay
  f)
  g) Contact board with fuses
3 Ignition/light switch
4 Dip switch with headlight flasher, horn and turn indicator switches
5 Front marker light
6 6-pin plug connector
7 Front right flashing turn indicator
8 Voltmeter
9 Clock
10 Clutch-operated switch
11 Front left flashing turn indicator
12 Left horn
13 Right horn
14 Hand brake light switch
15 Instrument cluster
  a) Speedometer dial light
  b) Revolution counter dial light
  c) High beam telltale (blue)
  d) Neutral indicator (green)
  e) Charge telltale (red)
  f) Oil pressure telltale red)
  g) Flasher repeater (green)
16 Foot brake light switch
17 Starter relay
18 Coils
19 Spark plugs with caps
20 Ignition trigger (Hall-effect transmitter)
21 Starter motor
22 Battery
23 Alternator
24 Regulator
25 Diode board
26 6-pin plug connector
27 Oil pressure sensing switch
28 Neutral indicating switch
29 Right rear flashing turn indicator
30 Rear light
  a) Rear and licence plate light
  b) Brake light
31 Rear left flashing turn indicator
32 Control unit for transistorized ignition system

R 100 RS
R 100 RT/81

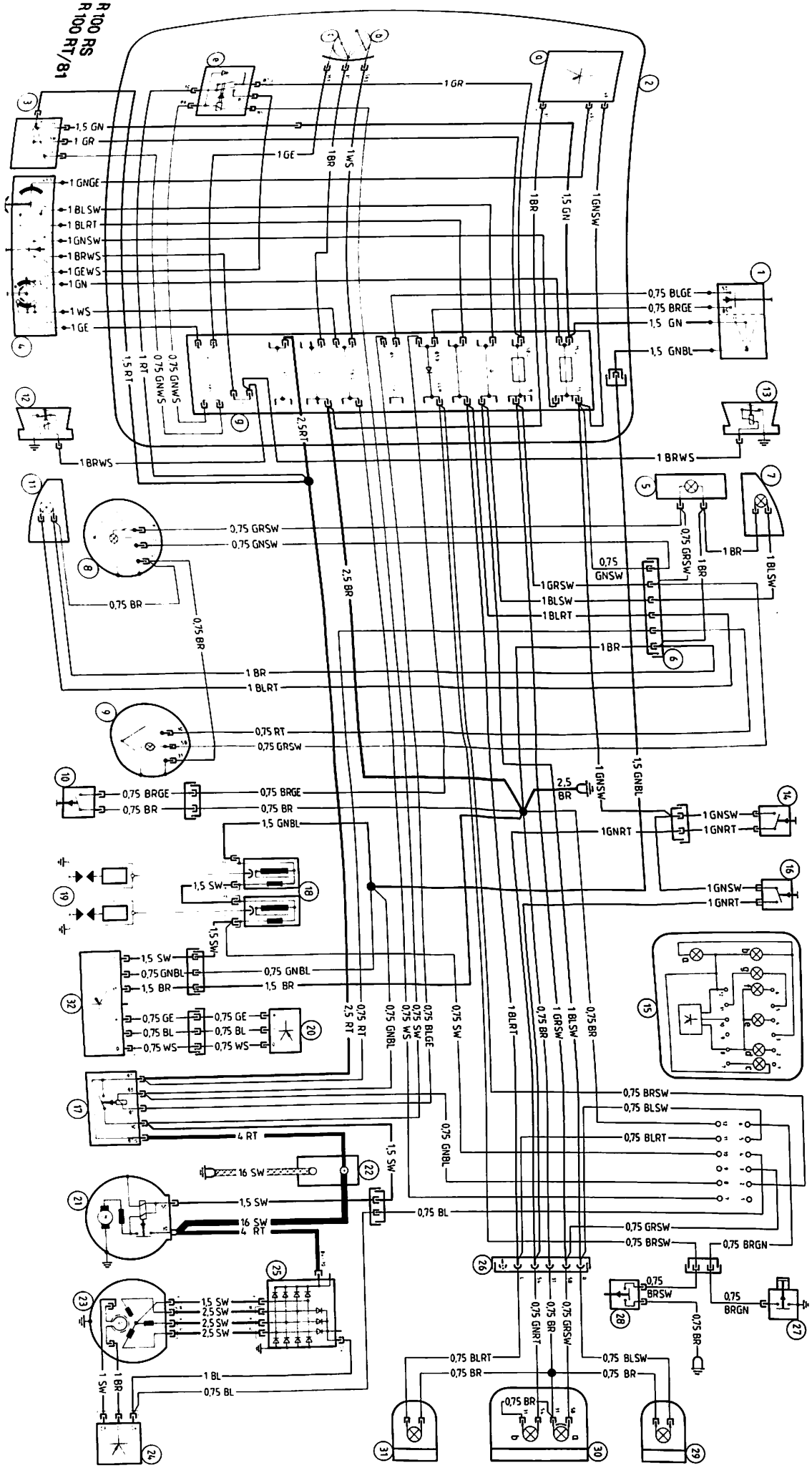

Key to electrical circuit diagram BMW R 100, R 100 CS (1981 models)

1 Starter contact and emergency cutout ("kill") switch
2 Headlight
  a) Flasher unit
  b) High beam
  c) Low beam
  d) Parking light
  e) Light relay
  f) Ignition/light switch
  g) Contact board with fuses
3
4 Dip switch with headlight flasher, horn and turn indicator switches
5
6
7 Front right flashing turn indicator
8 Voltmeter (R 100 CS only)
9 Clock (R 100 CS only)
10 Clutch-operated switch
11 Front left flashing turn indicator
12 Horn
13
14 Hand brake light switch
15 Instrument cluster
  a) Speedometer dial light
  b) Revolution counter dial light
  c) High beam telltale (blue)
  d) Neutral indicator (green)
  e) Charge telltale (red)
  f) Oil pressure telltale (red)
  g) Flasher repeater (green)
16 Foot brake light switch
17 Starter relay
18 Coils
19 Spark plugs with caps
20 Ignition trigger (Hall-effect transmitter)
21 Starter motor
22 Battery
23 Alternator
24 Regulator
25 Diode board
26 6-pin plug connector
27 Oil pressure sensing switch
28 Neutral indicating switch
29 Right rear flashing turn indicator
30 Rear light
  a) Rear and licence plate light
  b) Brake light
31 Rear left flashing turn indicator
32 Control unit for transistorized ignition system

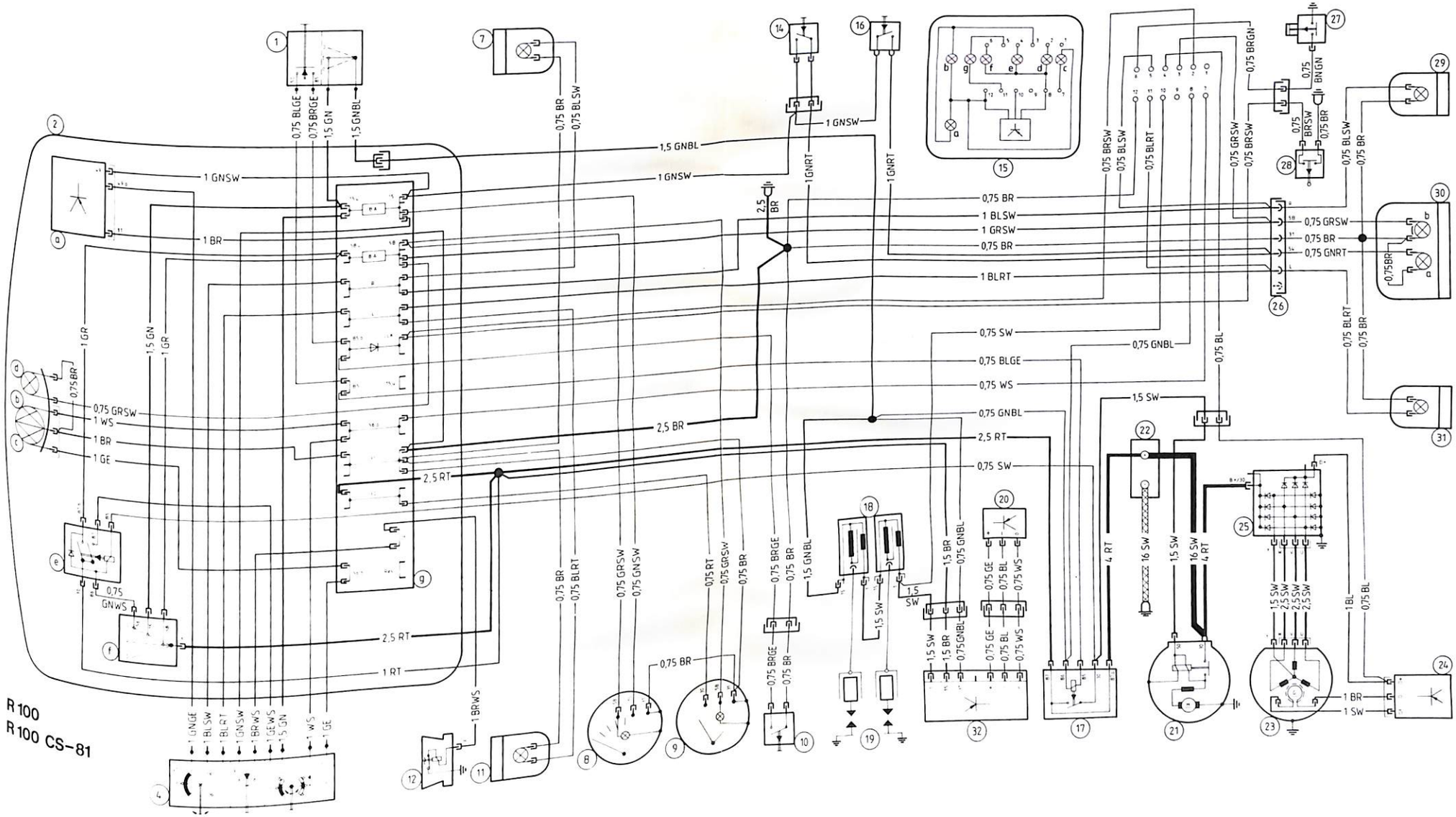

R 100
R 100 CS-81

61 21 010 Battery – removing and installing

Remove the left and right battery covers by slackening off the handle at the lock plate with an Allen key, taking out the front hex bolt, swinging up the handle, loosening the knurled nuts (arrows) at the battery holder, lifting up the battery post covers and disconnecting the cables at the battery.

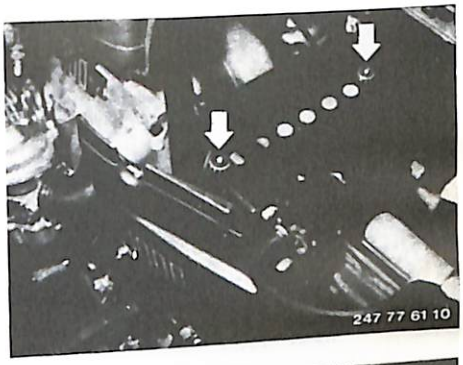

■

Unscrew the hex nuts at the top left and right of the battery holder, and tilt the battery with holder to the rear, against the rear mudguard. Press the threaded rods for the retaining stirrup past the rubber dampers.

■

Remove the right retaining bolt for the rear section of the frame. Pull off the battery vent pipe and lift out the battery.

Note: on 1981 models, the rear section of the frame does not have to be unbolted.

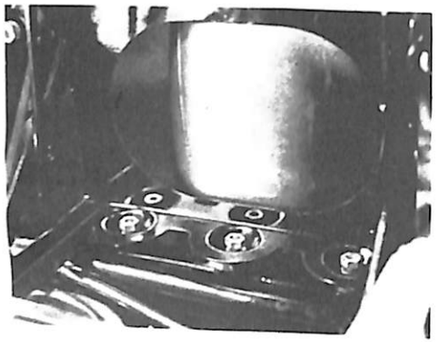

61 21 100 Battery holder – removing and installing

Remove (install) battery – 61 21 010

Unscrew the three hex nuts at the base and the hex nuts at the top right and left of the holder.

61 31 350 Flasher unit – removing and installing

On the R 100 RT and R 100 RS, detach the headlight beam tunnel mountings and remove the tunnel together with the moulded glass.

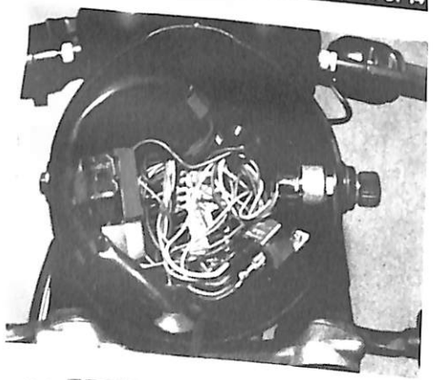

Disconnect the earth (ground) cable from the battery. Loosen the Phillips-head screw at the bottom of the headlight bezel ring, and pull the ring off by hand. Detach the flasher relay from its mount and separate the plug connector.

61 31 367 Buzzer – removing and installing

Take off the left battery cover. Separate the 2-pin plug connector and pull the buzzer down, away from the retaining plate.

61 31 400 Starter relay – removing and refitting

Disconnect the battery.

Fuel tank – remove and refit (16 11 030).

Pull relay out of plug base.

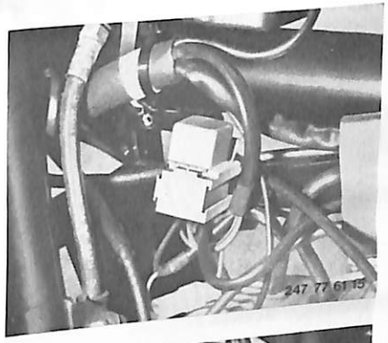

Leads on plug base

Flat pin connection 87	red lead
Flat pin connection 87a	red lead
Flat pin connection 86	2 leads, green blue
Flat pin connection 85	blue yellow lead
Flat pin connection 30	black lead

Removing and installing horn relay

Disconnect the battery.
Remove the fuel tank – 16 11 030.
Release the cable strap above the relay and pull the horn relay (arrow) out of the plug mounting. Lever out with screwdriver blade if necessary.

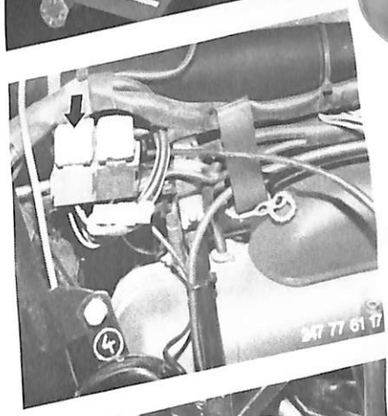

Cable connections on plug mounting

Flat pin connection 87	2 black leads
Flat pin connection 86	1 brown white lead
Flat pin connection 85	2 brown leads
Flat pin connection 30	2 red leads

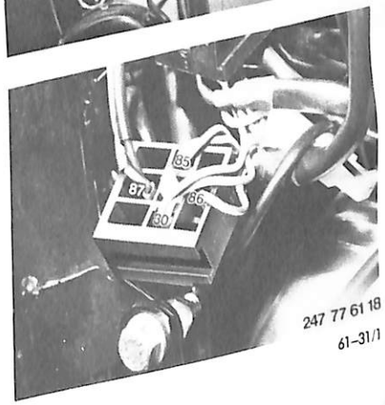

61 33 000 Horn – removing and refitting

Disconnect earth lead from battery. Unscrew hex nut from the horn.

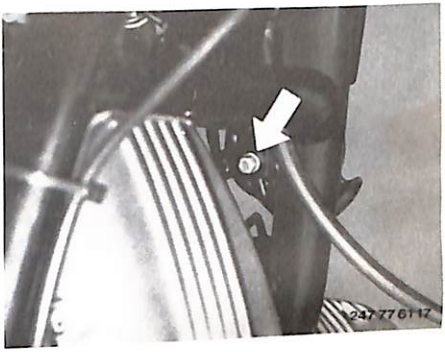

Disconnect lead from horn.

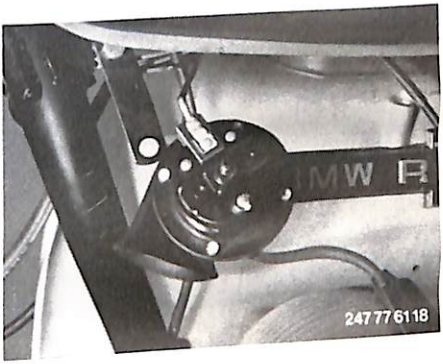

62 Instruments

		Page
	Specifications	62– 0/3
	Specifications (1979 models)	62– 0/4
	Specifications (1981 models)	62– 0/5
62 11 000	Instrument cluster – removing and installing	62–11/1
62 12 020	Speedometer drive shaft – removing and installing	62–12/1
62 13 020	Revolution counter drive shaft -removing and installing	62–12/1
62 13 050	Instruments in cockpit fairing – renewing	62–13/1

Technical Data

Model	R 60/7	R 75/7	R 80/7	R 100/7	R 100 S	R 100 RS
Revolutions per unit distance, km indicator	0.773	0.737	0.737 0.773*	0.711	0.67	0.691
Revolutions per unit distance, mile indicator	1.244	1.186	1.186 1.244*	1.144	1.078	1.112
Measuring range, km/h	20 . . . 220					
Measuring range, mile/h	10 . . . 130					
Revolution counter min^{-1}	1000 . . . 8000					

* version for regular fuel

12 77 Alteration

Instruments

Specifications – '79 models

Model	R 80/7		R 100 T	R 100 S	R 100 RT	R 100 RS
Revolutions per unit distance, km indicator	0,737	0,773*	0,691	0,67	0,691	
Revolutions per unit distance, mile indicator	1,186	1,244*	1,112	1,078	1,112	
Measuring range, km/h	20 . . . 220					
Measuring range, mile/h	10 . . . 130					
Revolution counter min $^{-1}$	1000 . . . 8000					

* versionb for regular fuel

11 78 Addition

3 82 Addition

Instruments

Specifications (1981 models)

Model	R 100	R 100 CS	R 100 RT	R 100 RS
Distance factor, km reading	0.691	0.67	0.691	
Distance factor, mile reading	1.112	1.078	1.112	
Scale range km/h	20 . . . 220			
Revolution counter min^{-1}	1000 . . . 8000			

Instrument cluster

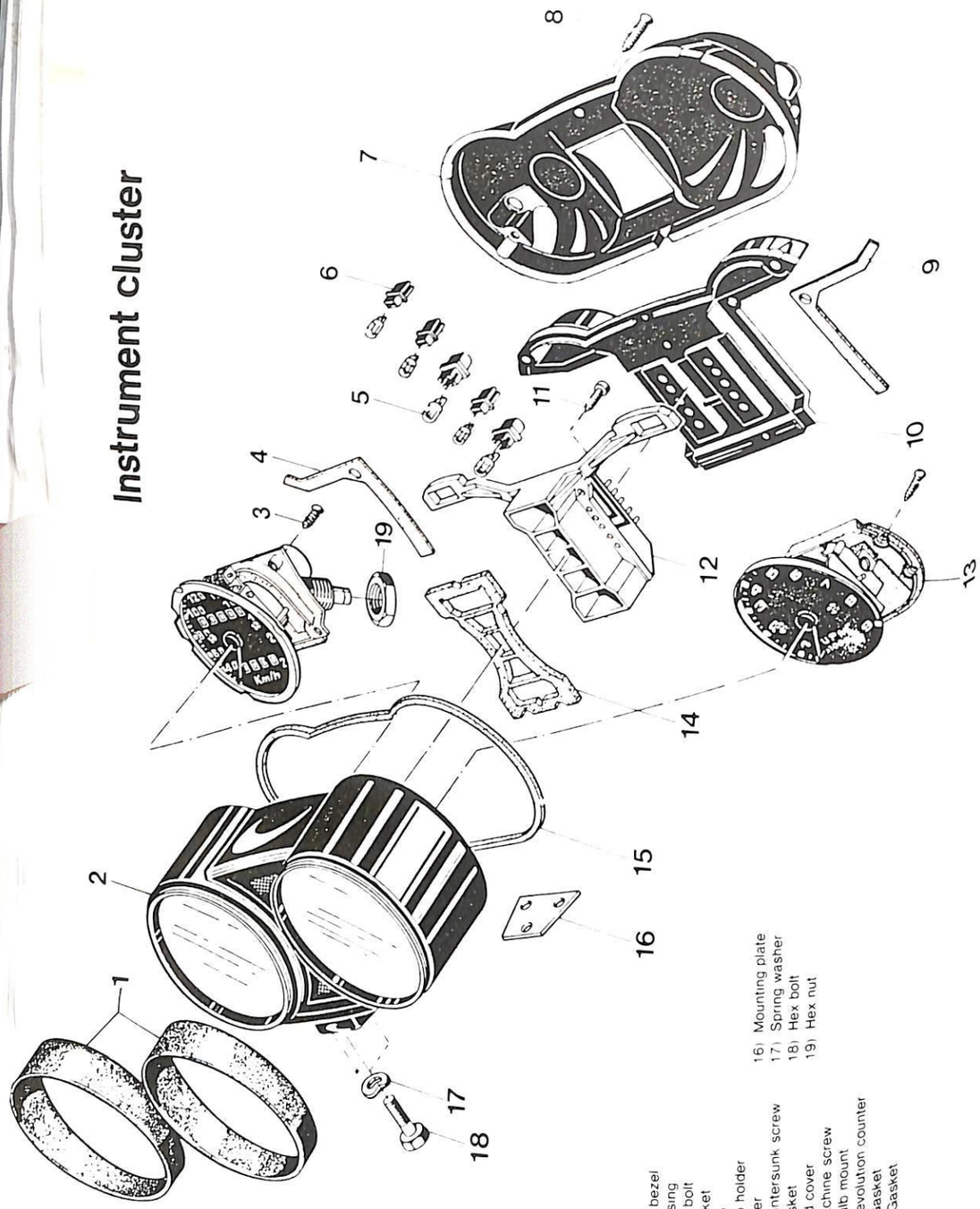

1) Dial bezel
2) Housing
3) Hex bolt
4) Gasket
5) Bulb
6) Bulb holder
7) Cover
8) Countersunk screw
9) Gasket
10) End cover
11) Machine screw
12) Bulb mount
13) Revolution counter
14) Gasket
15) Gasket
16) Mounting plate
17) Spring washer
18) Hex bolt
19) Hex nut

62 11 000 Combined Instrument – Removing and Refitting

Slacken the locknuts on the speedometer and revolution counter drive shafts (22 mm wrench) and loosen the knurled nuts

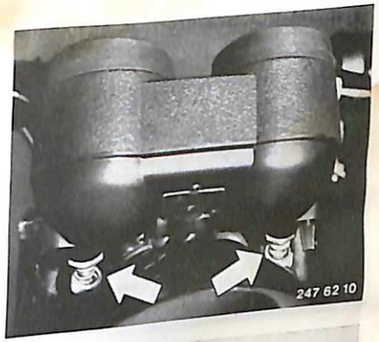

■

Slacken the three fastening screws and withdraw the combined instrument from its support

■

Unscrew the Phillips screw of the central plug and pull off the plug

■

Remove combined instrument

■

62 12 020 Speedometer Drive Shaft – Removing and Refitting

Loosen locknut (22 mm wrench), then unscrew knurled nut.

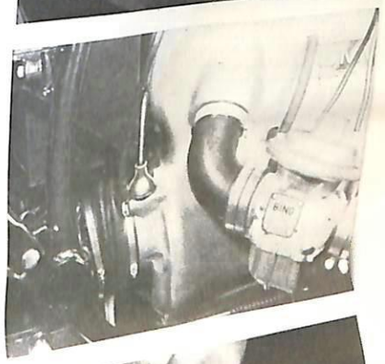

Push back protective rubber cap for speedometer drive on the gearbox. Pull out and remove speedometer drive after releasing the retaining bolt and removing the battery earth lead including washer.

Note when fitting: Make sure that the drive shaft is run correctly along the frame.

62 13 020 Revolution Counter Drive Shaft – Removing and Refitting (models with mechanical revolution counter drive)

Loosen locknut (22 mm wrench), then unscrew knurled nut.

Remove engine cover.

Unscrew fastening screw (arrow) for revolution counter shaft and withdraw the shaft.

62 13 050 Instruments in cockpit fairing – renewing

Take off the cockpit fairing – 46 63 020.

Separate the cable connectors.

Unscrew the 2 knurled nuts on the bracket. Take off the holder and press the instrument(s) up out of the fairing.

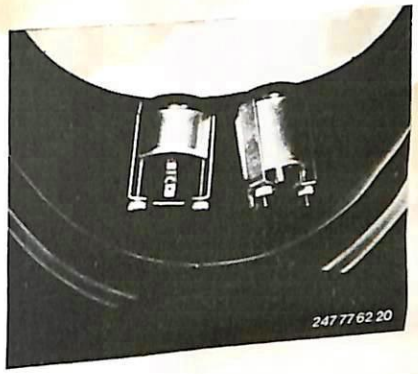

63 Lights

		Page
	Specifications	63– 0/3
	Specifications (1979 models)	63– 0/4
	Specifications (1981 models)	63– 0/5
63 10 004	Headlight – adjusting	63–10/1
63 21 380	Complete rear light cluster – detaching and attaching	63–10/2
63 23 170	Both flashing turn indicators (front or rear) – removing and installing	63–23/1
63 99 241	Headlight bulb – renewing	63–99/1
63 99 271	Bulb for flashing turn indicator (front or rear) – renewing	63–99/3
63 99 381	Rear light bulb – renewing	63–99/3

Technical Data

Model	R 60/7	R 75/7	R 80/7	R 100/7	R 100 S	R 100 RS
Headlamp (Type)	Bosch 0 303 850 100					
High and low beams	12 V / 60 / 55 W H4 quartz-iodine bulb					
Parking light	12 V / 4 W parking light bulb					
Idle telltale lamp (green)	12 V / 1.2 W indicator bulb					
Oil pressure telltale (orange)	12 V / 3 W indicator bulb					
Charge telltale (red)	12 V / 1.2 W indicator bulb					
High beam telltale (blue)	12 V / 1.2 W indicator bulb					
Turn indicator telltale (orange)	12 V / 3 W indicator bulb					
Instrument lighting	12 V / 1.2 W indicator bulb					
Tail and license plate light	12 V / 5 W					
Brake light	12 V / 21 W					
	two-filament bulb					
Turn indicators (2 yellow front and rear)	12 V / 21 W bulb					
Brake telltale (red)	12 V / 1.2 W indicator bulb					

Lights

Specifications – '79 models

Model	R 80/7	R 100 T	R 100 S	R 100 RT	R 100 RS
Headlamp (Type)	Bosch 0 303 850 100				
High and low beams	12 V / 60/55 W H4 quartz-iodine bulb				
Parking light	12 V / 4 W parking light bulb				
Idle telltale lamp (green)	12 V / 1.2 W indictor bulb				
Oil pressure telltale (orange)	12 V / 3 W indicator bulb				
Charge telltale (red)	12 V / 1.2 W indicator bulb				
High beam telltale (blue)	12 V / 1.2 W indicator bulb				
Turn indicator telltale (orange)	12 V / 3 W indicator bulb				
Instrument lighting	12 V / 1.2 W indicator bulb				
Tail and license plate light	12 V / 5 W bulb				
Brake light	12 / 21 W bulb				
Turn indicators (2 yellow front and rear)	12 V / 21 W bulb				
Brake telltale (red)	12 V / 1.2 W indicator bulb				

Lights

Specifications (1981 models)

Model	R 100	R 100 CS	R 100 RT	R 100 RS
Headlight type	Bosch Typ 0 303 850 100			
High and low beams	12 V / 60/55 W H4 halogen bulb			
Parking light	12 V / 4 W Parking light bulb			
Neutral indicator (green)	12 V / 1.2 W Indicator light bulb			
Charge indicator (red)	12 V / 3 W Indicator light bulb			
Oil pressure warning (red)	12 V / 1.2 W Indicator light bulb			
High beam telltale (blue)	12 V / 1.2 W Indicator light bulb			
Turn indicator repeater (green)	12 V / 3 W Indicator light bulb			
Instrument lighting	12 V / 3 W Indicator light bulb			
Additional instrument lighting	12 V / 2 W Indicator light bulb			
Rear/licence plate light	12 V / 5 W Standard bulb			
Brake light	12 V / 21 W Standard bulb			
Turn indicators (2 each, yellow, front and rear)	12 V / 21 W Standard bulb			
Fuses	8 A (2)			

63 10 004 Headlight – adjusting

Whenever any work is carried out on the headlight, the beam setting must afterwards be checked. If a setting device is not available, the following procedure should be carried out. Check tyre pressures and correct as necessary. Set spring struts for solo riding and Nivomat units to operating position.

The machine must rest on its wheels, with the rider seated, at a distance of 5 meters (16 ft 5 in) from a light-coloured wall. The height from the floor to the center of the headlight is marked on the wall with a cross, and a second cross marked 5 cm (2 in) below the first.

The low (dipped) headlight beam is then switched on and repositioned until the light-dark transition is on the center of the lower cross, rising to the height of the center cross at the right, then dropping away again. (Note: this applies to motorcycles used in countries which drive on the right.)

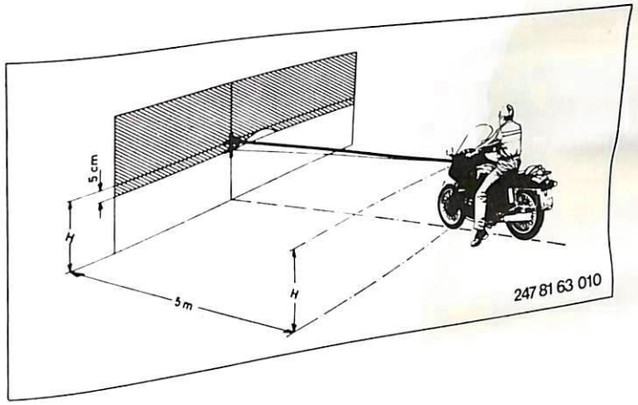

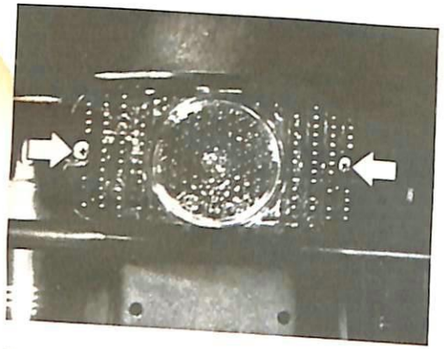

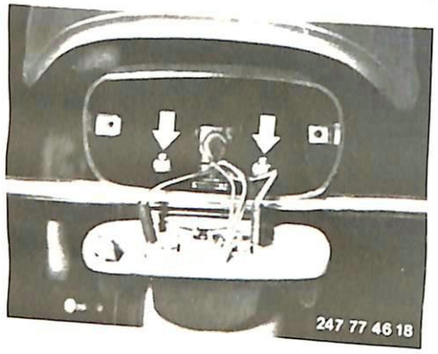

63 21 380 Complete rear light cluster – detaching and attaching

Disconnect the battery earth (ground) strap.

Remove both Phillips-head screws and take off the glass.

■

Detach the cable from the back of the reflector, make a note of the connections if necessary.

Remove the retaining bolts with washers and nuts from the housing, and take it off.

When installing: as the glass is offered up, make sure that the clear panel for licence plate lighting is at the bottom.

■

63 23 170 Both turn indicators (front or rear) – removing and refitting (R 60/7 – R 100 S)

Disconnect earth (ground) lead from the battery.
Unscrew both Phillips screws and remove the lens.

Note when fitting: When fitting the lens make sure that the marking "Top" is at the top.

■

Disconnect leads at the rear of the holder.

■

Slacken the 2 clamp screws and remove the turn indicator housing.

■

Removing and installing front turn indicators – R 100 RS:
Remove water shield from turn indicator housing and pull off flat pin plug. Remove the 2 Phillips screw for the lens and pull the turn indicator housing out forwards.

■

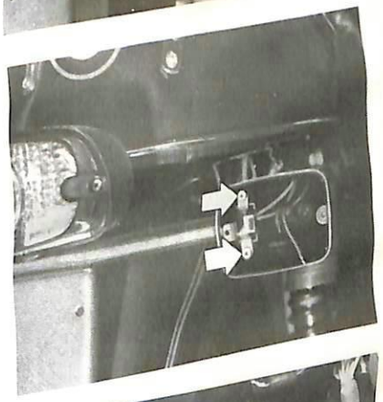

63-23/1

63 99 241 Headlight bulb – renewing

R 100 RS:

Unscrew the 4 knurled nuts holding the headlight beam tunnel, and take off the tunnel with the moulded glass.

■

R 100 RT:

Press away the rubber cover at the corners of the moulded glass, and unscrew the Phillips-head screws.

Take off the tunnel with moulded glass.

Warning: do not damage the glass with the screwdriver.

■

Loosen the Phillips-head screw (arrow) at the bottom of the headlight bezel ring, and pull the ring away from the headlight housing.

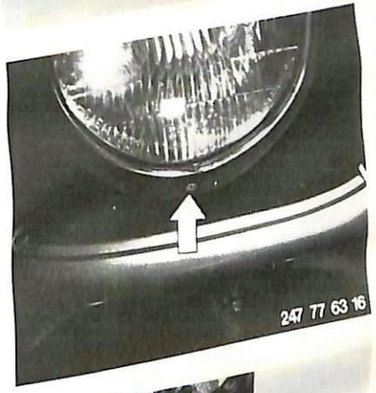

■

Release the wire clip, separate the halogen bulb from the reflector and pull it out of the spring-catch plug.

When installing: make sure that the lug designed to prevent the bulb from turning engages in the reflector.

Do not handle the bulb with the bare fingers; always use a clean cloth.

■

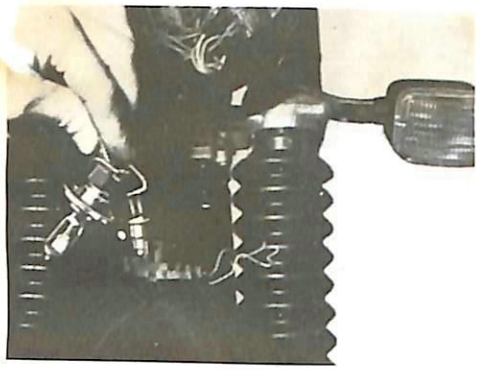

The parking light bulb is pressed out of the reflector from the inside, working through the hole for the main halogen bulb

■

63 99 271 Bulb for flashing turn indicator (front or rear) – renewing

Disconnect the earth (ground) strap at the battery.

Remove both Phillips-head screws and take off the glass.

■

Press the bulb into its holder and turn to the left to remove.

When installing: make sure that the "Top" marking on the glass is uppermost.

■

63 99 381 Rear light bulb – renewing

Disconnect the earth (ground) strap at the battery.

Remove both Phillips-head screws and take off the glass.

■

Press the bulb into its holder and turn to the left to remove.

When installing: make sure that the clear panel for licence plate illumination is at the bottom.

■

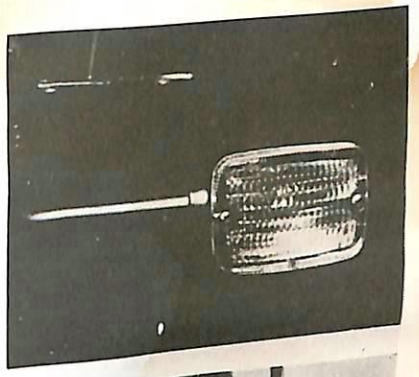

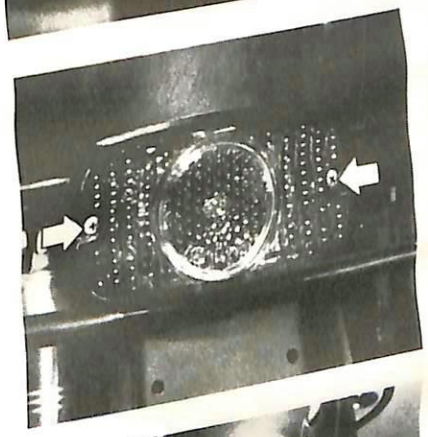

63-99/3

72 Special equipment

	Page
Circuit diagram for additional instruments	72–0/3
Circuit diagram for additional headlights	72–0/4
Circuit diagram for hazard warning flashers	72–0/5
Circuit diagram for full interference suppression	72–0/6

Key to electrical circuit diagram – additional instruments

Cable codes

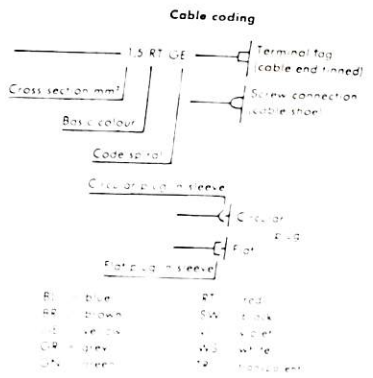

1 Headlight
2 Contact board with fuses
3 Earth (ground) at frame (near coils)
4 Ignition light switch
5 Voltmeter
6 Clock
7 Battery

New components

Existing components

CIRCUIT DIAGRAM

for additional instruments

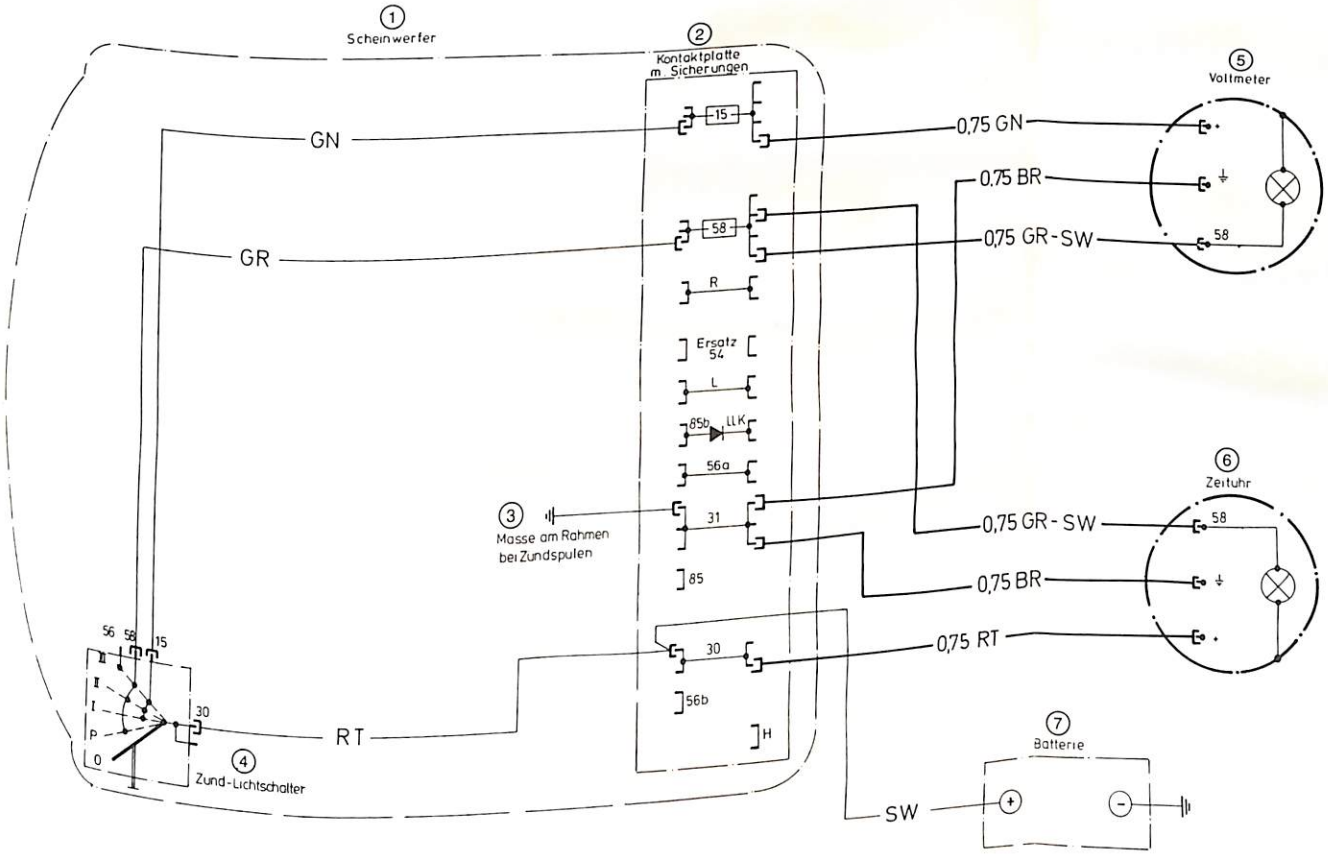

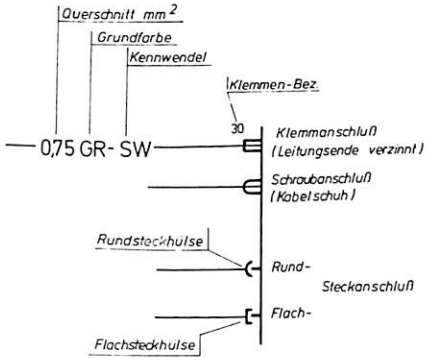

Kennzeichnung

BL = blau
BR = braun
GE = gelb
GN = grün
GR = grau
RT = rot
SW = schwarz
VI = violett
WS = weiß

hinzukommende Teile

vorhandene Teile

Key to electrical circuit diagram – additional headlights

Cable codes

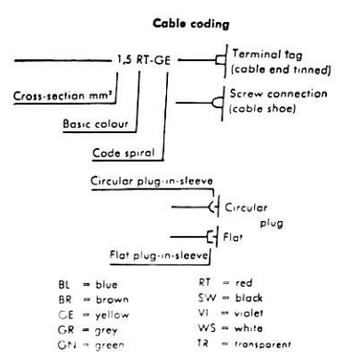

1 Headlight
2 Earth (ground) point
3 Lighting relay
4 ignition switch
5 Low beam (dip) switch
6 Relay I
7 Relay II
8 Contact board
9 to headlight high beam
10 to headlight low beam
11 to battery
12 Additional switch
13 Fog light
14 Additional driving light

New components

Existing components

CIRCUIT DIAGRAM

for additional driving lights

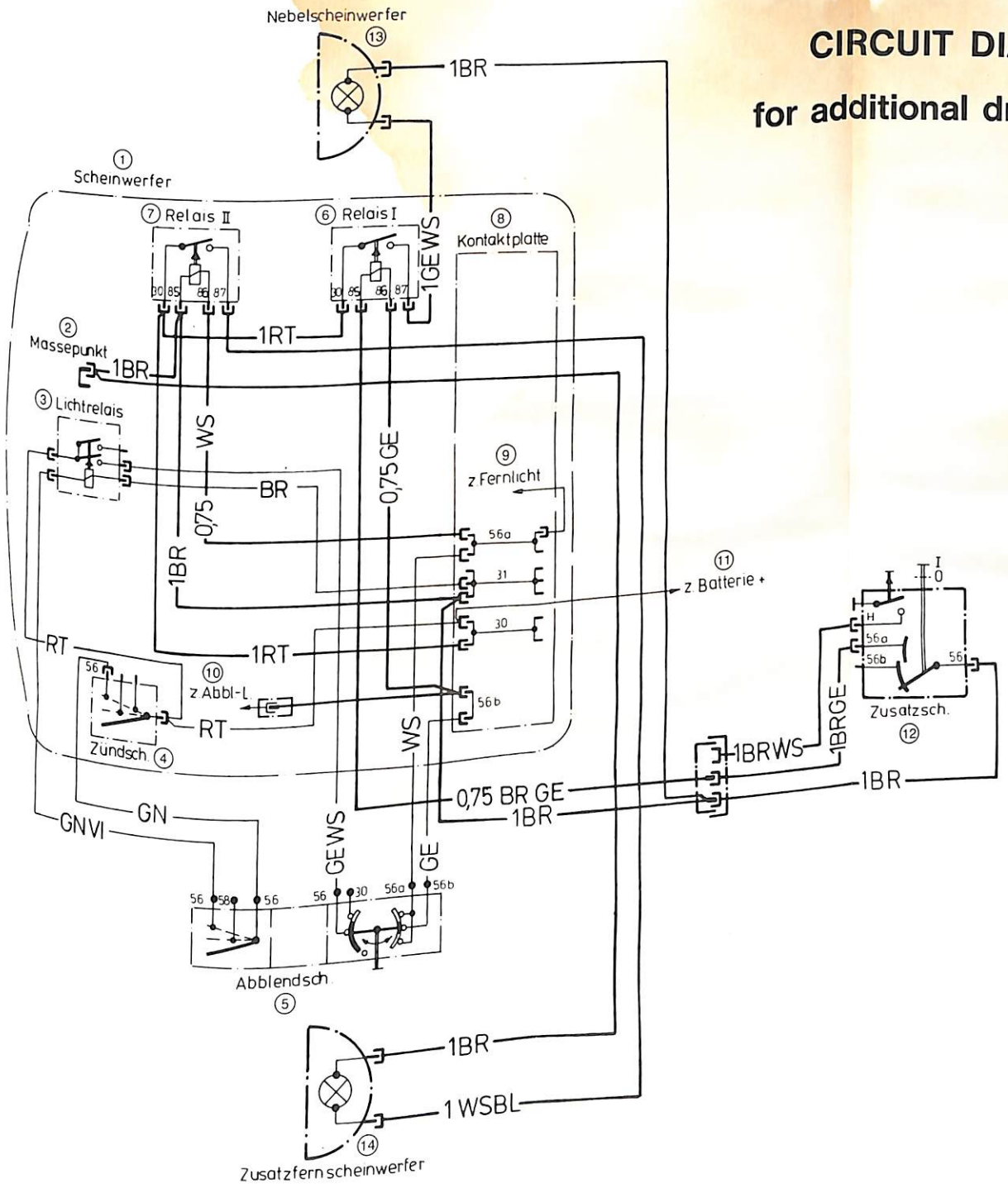

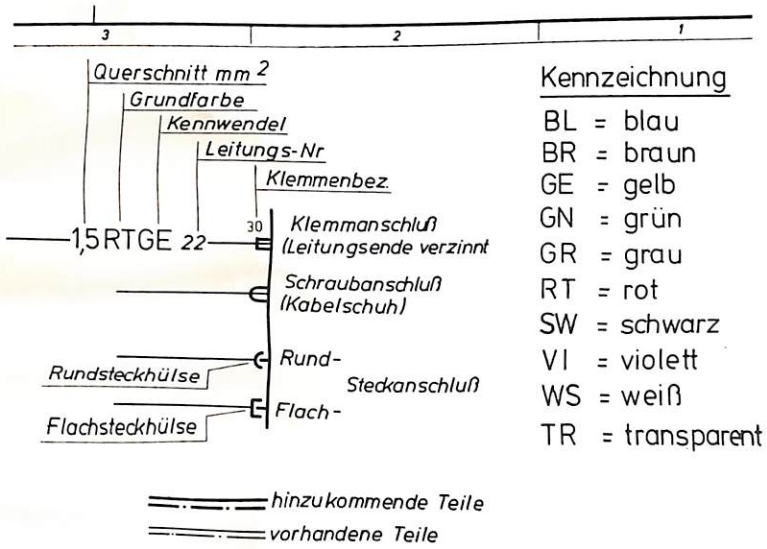

Kennzeichnung

BL = blau
BR = braun
GE = gelb
GN = grün
GR = grau
RT = rot
SW = schwarz
VI = violett
WS = weiß
TR = transparent

Key to electrical circuit diagram – hazard warning flashers

Cable codes

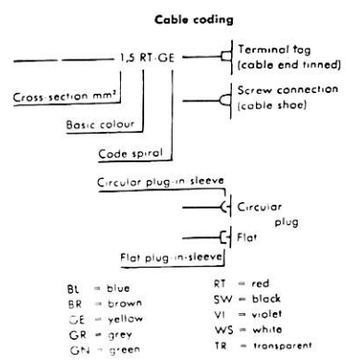

1 Headlight
2 Contact board
3 Hazard warning flasher relay
4 Diode
5 to turn indicator switch
6 Turn indicator repeater
7 Hazard warning flasher switch
8 Relay
9 Battery

New components

Existing components

CIRCUIT DIAGRAM

for hazard warning flashers

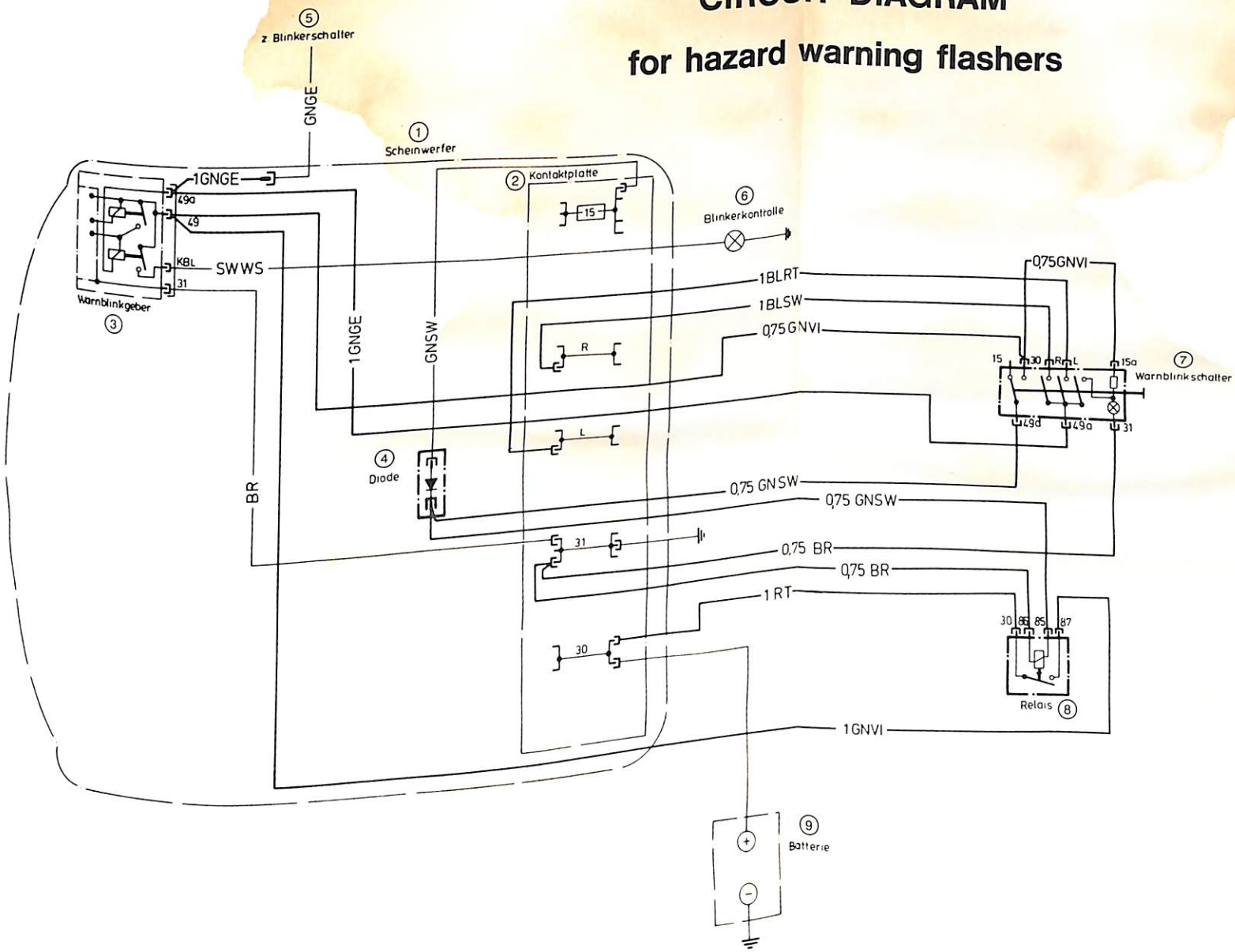

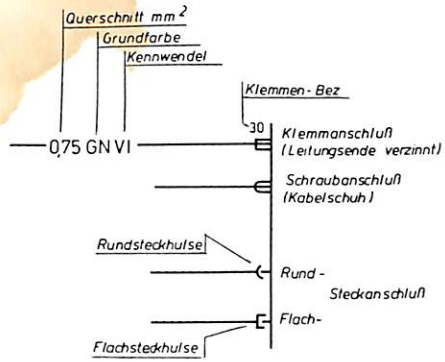

Kennzeichnung

BL = blau
BR = braun
GE = gelb
GN = grun
GR = grau
RT = rot
SW = schwarz
VI = violett
WS = weiß

hinzukommende Teile

vorhandene Teile

Key to electrical circuit diagram – full interference suppression

Cable codes

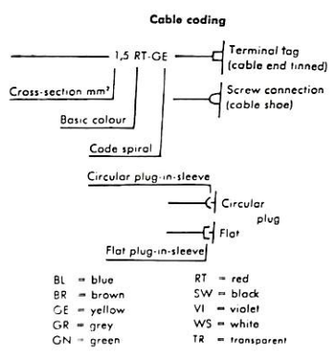

New components

Existing components

1 Ignition light switch
2 Condenser
3 Contact plate
4 Condenser
5 Foot brake light switch
6 to brake light
7 Starter
8 Condenser
9 Battery
10 Condenser
11 to wiring harness
12 Condenser
13 Starter relay
14 Condenser
15 Diode board
17 Horn, left
17 Horn, right
18 Coils
19 Condenser
20 Condenser
21 Suppressor filter
22 Spark plugs with caps
23 Condenser
24 to emergency engine cutout
25 Condenser

CIRCUIT DIAGRAM

for full interference suppression

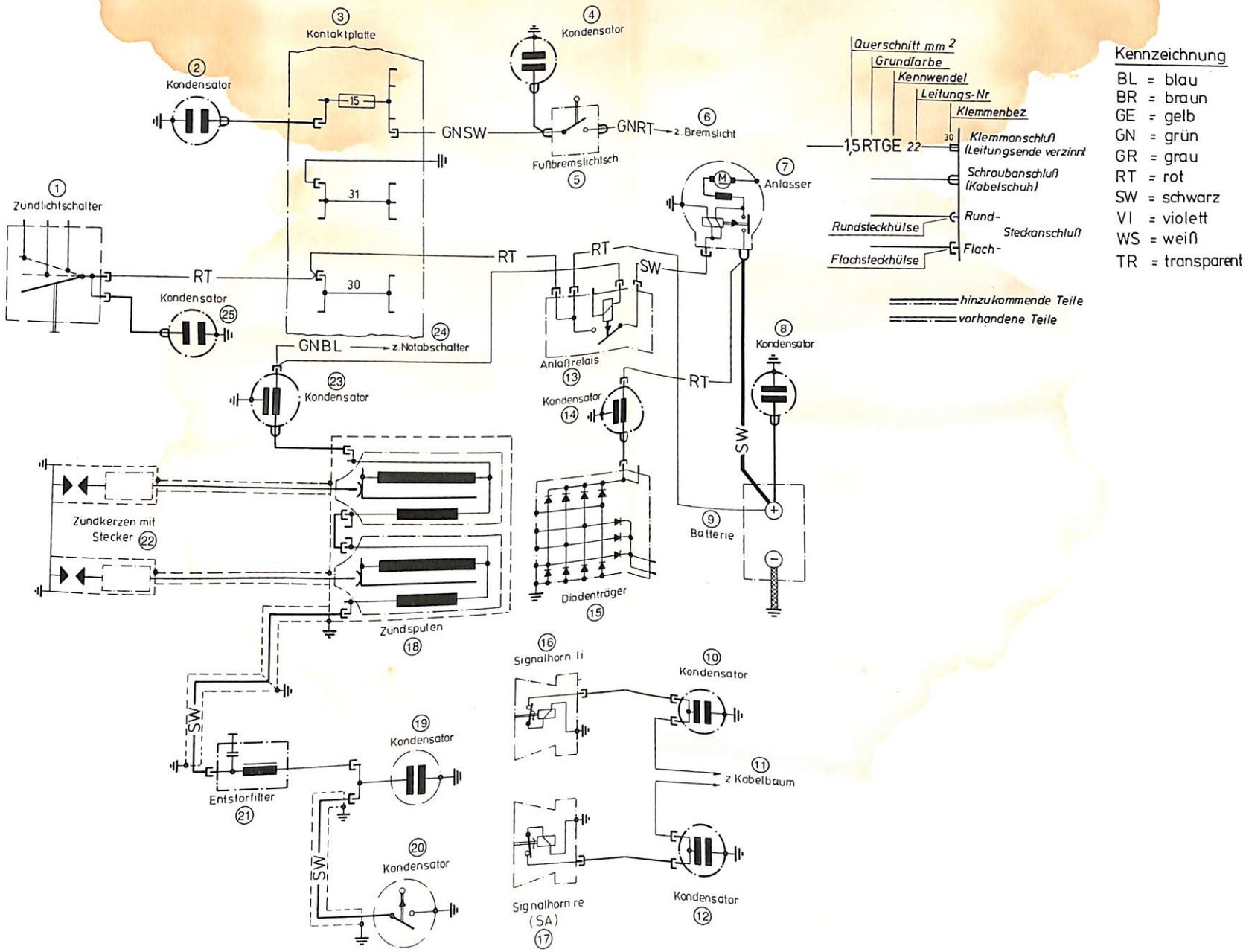

Bestell-Nr. 01 51 9 798 461 8.84 Printed in West Germany
© BMW AG, Sparte Motorrad After Sales

MOTO-BINS Ltd
16 Surfleet Road, Surfleet,
Spalding, Lincs., PE11 4AG UK
Tel: 01775 680881 / 680580
Fax: 01775 680860
Email: sales@motobins.co.uk