Repair Manual

BMW R 45
R 65

BMW MOTORRAD GMBH Munich

rder No. 01 51 9 798 092

7.78

SUPPLEMENT FILING REGISTER

Supplement/Order No.	Filing Date	Signature
Repair Manual R65 Supplement 1 01 519 798 095	7/31/84	[illegible]
Repair Manual BMW R 65 Supplement 2 01 559 798 115	7/31/84	[illegible]
Repair Manual R65, R 65 LS Supplement 3 01 579 798 027	7/31/84	[illegible]

00	Wartung und allgemeine Hinweise	Maintenance and general hints	Entretien et généralités	Manutenzione e informazioni generali
11	Motor	Engine	Moteur	Motore
12	Motor-Elektrik	Engine-Electrical	Moteur-électricité	Motore-Impianto elettrico
13	Kraftstoffaufbereitung und -regelung	Fuel supply and adjustments	Alimentation et réglage au carburant	Carburazione
16	Kraftstoffbehälter und -leitungen	Fuel tank and lines	Réservoir à essence et conduites	Serbatoio e condutture carburante
18	Auspuffanlage	Exhaust system	Dispositif d'échappement	Impianto di scarico
21	Kupplung	Clutch	Embrayage	Frizione
23	Getriebe	Transmission	Boîte à vitesses	Cambio
26	Gelenkwelle	Drive shaft	Arbre de transmission	Albero di trasmissione
31	Vorderradgabel	Front fork	Fourche d'avant	Forcella anteriore
32	Lenkung	Steering	Direction	Sterzo
33	Hinterradantrieb	rear wheel drive	transmission roue arrière	Trazione posteriore
34	Bremsen	Brakes	Freins	Freni
35	Fußbetätigung	Pedal assembly	Pédalier	Pedali
36	Räder und Bereifung	Wheels and tyres	Roues et pneumatiques	Ruote e pneumatici
46	Rahmen	Frame	Cadre	Telaio
51	Ausstattung	Equipment	Équipement	Arredamento
52	Sitzbank	Dual seat	Banquette	Sellone doppio
61	Allgemeine Fahrzeug-elektrik	General electrics	Châssis-électricité	Telaio-impianto elettrico
62	Instrumente	Instruments	Instruments	Strumenti
63	Leuchten	Lights	Lampes	Luci
65	Vollentstörung	radio interference	antiparasitage complet	schermaggio completo
71	Zubehör	accessories	accessoires	Accessori
72	Sonderausrüstung	Special equipment	Equipement spécial	Equipaggiamento speciale
99	Lackierung	Paint work	Peinture	Verniciatura

Bestell-Nr. 01 99 0 099 188 d/e/f/i/sp/sw/nl (Register) 3/77

00	Entretenimiento e informes generales	Vård och allmänna hänvisningar	aanwijzingen
11	Motor	Motor	Motor
12	Motor-Equipo eléctrico	Motor-Elsystem	Motor-elektrisch
13	Alimentación de combustible y reglaje	Bränsletillförsel och justering	Benzinetoevoer en afstelling
16	Depósito de carburante y tubería	Bensintank och ledningar	Benzinetank en leidingen
18	Tubería de escape	Avgassystem	Uitlaatinstallatie
21	Embrague	Koppling	Koppeling
23	Caja de cambio	Växellåda	Versnellingsbak
26	Arbol articulado	Kardanaxlar	Cardanas
31	Horquilla delantera	Framgaffel	Voorwielvork
32	Dirección	Styrning	Stuurinrichting
33	tracción posterior	Bakhjuls drivning	Aandrijfas
34	Frenos	Bromsar	Remmen
35	Pedales	Pedaler	Pedalen
36	Ruedas y neumáticos	Hjul och däckutrustning	Wielen en banden
46	Cuadro	Ram	Frame
51	Equipo	Utrustning	Uitrusting
52	Asiento doble	Säten	Duozadel
61	Instalación eléctrica	Fordonets elsystem Chassi elsystem	Elektrische Installatie
62	Instrumentos	Instrument	Instrumenten
63	Luces	Lampor	Lampen
65	supresión de interferencias	Avstorning	volontstoring
71	accessorios	tillbehör	accessoires
72	Equipo especial	Special-utrustning	Speciaal uitrusting
99	Pinturas	Lak	lak

INTRODUCTION

This repair manual is intended to guarantee that the maintenance and repair work required for BMW cars is done in the correct manner. The manual should be used by shop foremen and mechanics to supplement the practical and theoretical knowledge they have acquired at our service training school.

Specifications are provided at the beginning of each main group.

The group system was taken from our Flat Rate Catalog.

Taking our page numbering system as an example, 33–10/2 means:

33 main group
–10 subgroup
/ 2 consecutively numbered page in subgroup

The special tools required for proper repairs are listed in Service Information Bulletin No. 6/76 (419 R) of Service Promotion, Group Equipment. Their application is described in texts accompanying the illustrations.

Each job text always describes the removal procedures. There are appropriate installation notes, if installation cannot be completed in reverse sequence.

Supplements to this manual will include alterations and additions. A sheet marked "alteration" at the bottom replaces an old sheet. Sheets marked "addition" are simply filed at the right place without removing any sheets.

In addition to information on improvements and modifications as announced regulary in our Service Information Bulletins, we recommend that you use the microfilmed parts catalogs as a further source of information.

BMW MOTORRAD GMBH
Service Division

All rights reserved. Reprints, translations or reproductions, even extractions, only with the written consent of the publisher.
Subject to printed errors and engineering changes.
Publisher: BMW Motorrad GmbH Munich

Printed in Western Germany

7.78

Tightening Torques

for self-locking hexagon nuts

BMW N
113 49.0

Applicable only to nuts according to BMW N 113 48.0 and DIN 985.

Surface condition: Phosphate treated or galvanized bolts/screws, galvanized or unwaxed nuts.
Lubricated condition: either non-lubricated or lubricated with light coat of oil.

For cadmium plated bolts/screws or nuts the tightening torque must be ≈ 30% less than value given in table when utilization factor of bolt material is the same.

Not applicable when surface or lubricated condition of threads is different, property class of bolt/screw is less than 8.8 (e.g. 6.9), in conjunction with expansion bolts/screws.

In such cases values will have to be determined separately.

Threads	Tightening Torque M_A (kpm)					
	Nuts acc. to BMW N 113 48.0 Property Class			Nuts acc. to DIN 985 Property Class		
	8	10	12	8	10	12
M 6	$1{,}1^{+0{,}1}$	$1{,}5^{+0{,}2}$	$1{,}8^{+0{,}2}$	$1{,}0^{+0{,}1}$	$1{,}3^{+0{,}2}$	$1{,}6^{+0{,}2}$
M 8 M 8 x 1	$2{,}5^{+0{,}3}$	$3{,}4^{+0{,}4}$	$4{,}0^{+0{,}5}$	$2{,}5^{+0{,}2}$	$3{,}3^{+0{,}3}$	$3{,}9^{+0{,}4}$
M 10 M 10 x 1,25	$4{,}9^{+0{,}5}$	$6{,}8^{+0{,}8}$	$8{,}0^{+0{,}9}$	$4{,}7^{+0{,}5}$	$6{,}4^{+0{,}7}$	$7{,}7^{+0{,}8}$
M 12 M 12 x 1,5	$8{,}1^{+0{,}9}$	$11{,}4^{+1{,}3}$	$13{,}5^{+1{,}5}$	$7{,}8^{+0{,}8}$	$10{,}9^{+1}$	$12{,}6^{+1{,}5}$
M 14 M 14 x 1,5	$13{,}0^{+1{,}5}$	$18{,}0^{+2}$	$22{,}0^{+2}$	$12{,}7^{+1{,}5}$	$17{,}0^{+2}$	$21{,}0^{+2}$
M 16 M 16 x 1,5	$22{,}5^{+2}$	$28{,}0^{+3}$	$33{,}0^{+4}$	$19{,}5^{+2}$	$26{,}0^{+3}$	$31{,}0^{+4}$
M 18 M 18 x 1,5	$27{,}0^{+3}$	$38{,}0^{+4}$	$44{,}0^{+5}$	$26{,}0^{+3}$	$36{,}0^{+4}$	$42{,}0^{+5}$

Pertinent preload forces Pv (kp), corresponding with different property classes, are shown in "Tightening Torques and Preload Forces" table of BMW N 600 02.0.

Values given in this table shall apply to bolts/screws or nuts having the above mentioned properties. Tightening torque values including tolerances will only be given on layout or assembly drawings if operations require a value deviating from standards.

Bolts/screws or nuts subjected to high dynamic loads will have their tightening torque value determined by exact calculations and tests.

Conversion:
1 kpm x 7.233 = tightening torque in ft. lbs.

Tightening Torques and Preload Forces

Applicable only to bolts/screws according to DIN 912, 931, 933, 960, 961, 6912 and nuts having a nut height of 0.8 x d according to DIN 934 and exclusively for μ tot. = 0.14.
(Phosphate treated bolts/screws, nuts without final treatment or galvanized. Lubricated condition: either non-lubricated or lubricated with oil.)

For cadmium plated bolts/screws or nuts (μ tot. $\approx$ 0.08 to 0.09) the tightening torque must be $\approx$ 30% less than value given in table when utilization factor of bolt material is the same.

Not applicable when a different surface or lubricated condition of the threads is used of if there is a deviation in nut height. In such cases values will have to be determined separately.

Not applicable to bolts/screws with expansion shanks, self-locking screws or screws used to hold parts made of different materials.

Utilization factor of a bolt/screw with standard metric threads:

$$\sigma_{red} - 0{,}09 \cdot \sigma_{0,2}$$

	Tightening Torque M_A (kpm)						Preload force P_V (kp)					
	Property Class acc. to DIN 267						Property Class acc. to DIN 267					
Threads	5.6	6.8	6.9	8.8	10.9	12.9	5.6	6.8	6.9	8.8	10.9	12.9
M 6	$0{,}4^{+0,1}$	$0{,}6^{+0,1}$	$0{,}7^{+0,1}$	$0{,}9^{+0,1}$	$1{,}2^{+0,2}$	$1{,}5^{+0,2}$	425	600	685	855	1210	1440
M 8	$1{,}0^{+0,1}$	$1{,}6^{+0,2}$	$1{,}8^{+0,2}$	$2{,}2^{+0,2}$	$3{,}0^{+0,3}$	$3{,}6^{+0,4}$	740	1190	1330	1570	2170	2630
M 10	$2{,}0^{+0,2}$	$3{,}2^{+0,4}$	$3{,}6^{+0,4}$	$4{,}3^{+0,5}$	$6{,}0^{+0,7}$	$7{,}3^{+0,8}$	1160	1880	2090	2500	3480	4200
M 8x1	$1{,}0^{+0,1}$	$1{,}0^{+0,2}$	$1{,}8^{+0,2}$	$2{,}2^{+0,2}$	$3{,}0^{+0,3}$	$3{,}6^{+0,4}$	740	1190	1330	1610	2200	2670
M 10x1,25	$2{,}0^{+0,2}$	$3{,}2^{+0,4}$	$3{,}6^{+0,4}$	$4{,}3^{+0,5}$	$6{,}0^{+0,7}$	$7{,}3^{+0,8}$	1160	1900	2120	2520	3530	4250
M 12x1,25	$3{,}4^{+0,4}$	$5{,}4^{+0,6}$	$6{,}1^{+0,7}$	$7{,}2^{+0,8}$	$10{,}3^{+1}$	$12{,}0^{+1,5}$	1720	2710	3070	3610	5100	6090
M 12x1,5	$3{,}4^{+0,4}$	$5{,}4^{+0,6}$	$6{,}1^{+0,7}$	$7{,}2^{+0,8}$	$10{,}3^{+1}$	$12{,}0^{+1,5}$	1690	2670	3030	3570	5040	6000
M 14x1,5	$5{,}4^{+0,6}$	$8{,}6^{+1}$	$9{,}8^{+1}$	$11{,}5^{+1,5}$	$16{,}0^{+2}$	$20{,}0^{+2}$	2330	3720	4180	5030	6970	8510
M 16x1,5	$8{,}3^{+1}$	$13{,}5^{+1,5}$	$15{,}5^{+1,5}$	$18{,}0^{+2}$	$25{,}0^{+3}$	$30{,}0^{+4}$	3240	5190	5840	6920	9710	11770
M 18x1,5	$11{,}0^{+1,5}$	$18{,}0^{+2}$	$20{,}0^{+2,5}$	$24{,}0^{+3}$	$34{,}0^{+4}$	$40{,}0_{+5}$	3890	6240	7020	8380	11800	13960
M 20x1,5	$16{,}0^{+2}$	$26{,}0^{+3}$	$29{,}0^{+3,5}$	$34{,}0^{+4}$	$49{,}0^{+5}$	$59{,}0^{+6}$	5070	8170	9180	10680	15200	18250

Values given in this table shall apply to bolts/screws or nuts having the above mentioned properties. Tightening torque values including tolerances will only be given on layout or assembly drawings if

a) operations require a value deviating from standards,
b) or property class of bolt/screw and nut is not known.

Important! All deviations from this table are pointed out in the "Specifications".

Conversions: 1 mkp x 7.233 = tightening torque in ft. lbs.
1 kp x 2.2046 = preload force in lbs.

00 Maintenance and General Information

Introduction . . . . . Page 00–0/ 3
Tightening torque acc. BMW and DIN standards 00–0/ 5
Bolts/nuts, DIN standard and property class 00–0/ 7
Tightening torque survey R 65, R 65 LS 00–0/ 9
Standard units of measurement 00–0/11
Oil and fuel consumption – determine 00–0/13
Engine oil viscosity/temperature diagram 00–0/15
Engine oil circuit 00–0/17

INTRODUCTION

This repair manual will help to make sure that all of the most important service and repair procedures are performed correctly. When used everyday by shop foremen and mechanics it will supplement the practical and theoratical knowledge acquired in our service training school. This will even further improve the quality of service.

This manual has a chronological layout according to the 00 to 99 group system applied in flat rate catalogs.

Example of page numbering system:

33 – 10 / 2

Main Group | Subgroup | Consecutively Numbered Page in Subgroup

Specifications are provided at the beginning of each main group.

The special tools required for proper repairs are listed in Service Information Bulletins under the service promotion group on equipment, together with supplements. Their application is described in texts and shown in illustrations.

Each job text always describes the removal procedures. There are appropriate installation notes when installation cannot be completed in reverse sequence.

Supplements for this repair manual will consist of alterations and additions. Sheets marked "alteration" replace old sheets. Sheets marked "addition" are new and must be filed according to page number.

If a job number is used twice, because of engineering changes, the second repair procedures with the same number will be printed on colored paper and must be filed as an addition.

Repair instructions will also be published in service information bulletins if necessary. They will, of course, be included in the next edition of the repair manual. We also recommend using the spare part microfilm for additional help.

BMW Motorrad GmbH + Co.
Service Division

All rights reserved. Reprints, translations or reproductions, even extractions, require written consent of the publishers.
Subject to printed errors and engineering changes.
Publishers: BMW Motorrad GmbH + Co.

Printed in Western Germany

Survey of Tightening Torque Values in Nm

	Nm
Engine	
Cylinder head nuts (15-35-39 in 3 steps)	35 ÷ 39
Connecting rod bolts	48 ÷ 52
Flywheel	100 ÷ 105
Oil pan to crankcase	9 ÷ 11
Nut for valve adjusting screw	18 ÷ 22
Adapter for carburetor connection	12 ÷ 14
Engine Electrical System	
Armature mounting screw	23 ÷ 27
Spark plugs	23 ÷ 30
Starter mounting screws	47.5
Exhaust System	
Spider nuts for exhaust	160 ÷ 180
Clutch	
Castle nut for clutch pedal adjusting screw	20 ÷ 23
Transmission	
Transmission to engine	20 ÷ 23
Selctor fork or automatic shift	23 ÷ 25
Output flange to transmission output shaft	200 ÷ 220
Transmission cover to transmission case	8 ÷ 9
Nut for kickstart lever	20 ÷ 23
Oil filler screw	28 ÷ 31
Oil drain screw	23 ÷ 26
Propeller Shaft	
Twelve-sided head screw	38 ÷ 42
Front Wheel Fork	
End bolt	80 ÷ 90
Fork bridge mounting bolts	40 ÷ 45

	Nm
Damper in slide tube mounting screw	30 ÷ 40
Axle mounting screw	15 ÷ 17
Fender holder to slide tube	20 ÷ 25
Steering	
End bolt	80 ÷ 90
Rear Axle	
Nut on drive pinion	150 ÷ 165
Threaded ring on drive pinion	100 ÷ 120
Nuts on cardan cover	18 ÷ 21
Final drive oil filler plug	28 ÷ 31
Final drive oil drain plug	23 ÷ 26
Shaft bolt for control arm	10 ÷ 12
Castle nut for control arm shaft bolt	100 ÷ 110
Oil filler plug of control arm	14
Oil drain plug of control arm	14 ÷ 17
Rear stub axle mounting bolt	14 ÷ 18
Shock absorber rod to spring strut at top	30 ÷ 34
Brakes	
Brake line to master cylinder	8 ÷ 11
Brake line to brake caliper	8 ÷ 11
Wheels and tires	
Friction torque of wheel bearings with specified tightening torque of axle nuts	0.15÷0.30
Nuts on stub axles, front and rear	45 ÷ 48
Frame	
Frame rear section mounting bolts	25
Kickstand mounting bolts	35

10 Newton meter ≙ 1 mkp

Determining oil consumption

Wait until about 7 500 km (5 000 miles) have been covered before measuring oil consumption.
This distance is needed for oil consumption to settle down to a steady figure.
There must be no engine oil leaks.
Drain the engine oil while at normal operating temperature.
Drain the oil cooler.
Renew the filter element.
Fill the engine with fresh oil to the correct level.
Ride the machine under normal operating conditions until the oil level drops to the lower mark on the dipstick. Measurement after covering only 500 – 1 000 km (300 – 600 miles) is never accurate, since experience has shown that the first half-liter of oil (about 3/4 pint) is consumed more rapidly than the remainder.
The permissible oil consumption figure is up to 0.1 liter per 100 km (350 miles per Imp. pint, 590 miles per US quart).

Possible causes of excessive engine oil consumption:

1. Running-in is not yet complete
2. Leaks past valve guides
3. Score marks resulting from piston seizure
4. Piston rings incorrectly installed, broken or worn
5. Too much clearance between valve stems and guides.

Determining fuel consumption by the DIN (German Industrial Standard) 70030 test method

The machine's carburetor and ignition settings[1] must be to standard specification.
The tire sizes must be as stated in the documents.
Tire pressures must be corrected if necessary to the specified values.
The brakes must be fully released.
The engine should have covered at least 7 500 km (5 000 miles) and be at normal operating temperature.
During fuel consumption testing the motorcycle should carry a weight halfway between the gross weight limit and the unladen weight.
Speed over the entire test route should be as uniform as possible, and three-quarters of the machine's top speed.
However, the test speed must not exceed 110 km/h (68 mile/h).
The test route should be as flat and dry as possible and 10 km (6.3 miles) in length. It should be traversed in both directions. Uphill and downhill gradients of up to 1.5% (1 in 67) are permissible.
The air temperature should be between +10° C (50° F) and +30° C (86° F), and the wind velocity not more than 3 m (9.85 ft) / s.
The machine is to run on a brand-name grade of fuel in accordance with the manufacturer's specification.

The fuel consumption should be determined with a commercially available meter or by means of the following formula, adding 10% for unfavorable circumstances.

$$\frac{\text{Fuel consumed} \times 100}{\text{Distance covered in km}} = \text{fuel consumption in l/100 km}$$

Note: Fuel consumption in Imperial miles per gallon $= \dfrac{282.47}{\text{Consumption in l/100 km}}$

Fuel consumption in US miles per gallon $= \dfrac{235.2}{\text{Consumption in liters/100 km}}$

Bolts and Screws

Description	Head shape	DIN No.	Strength rating
Hexagon bolts		931 933 960 961 70614	8.8 10.9 12.9
		561	8.8
Cheese-head screws		84	4.8 8.8
		912 6912	8.8 10.9
Button-headed screws		7986	4.8
Carriage bolts		603	4.6 8.8
Countersunk screws		63	4.8 8.8
		7987	4.8 8.8
Oval-head screws		920 921	5.6[4]
		7985	4.8
Oval-head countersunk screws		91	4.8 8.8
		7988	4.8
Cheese-head self-tapping screws		7971	[1]
Hexagon self-tapping screws		7976	[1]

Description	Head shape	DIN No.	Strength rating
Countersunk self-tapping screws		7982	[1]
Oval-head self-tapping screws		7981	[1]
Oval-head countersunk self-tapping screws		7983	[1]
Stud bolts	–	833 835 836 838 939 940	8.8
Threaded pins		417 551 553	[2] [4]
		438	4.8[4]
Shoulder studs		427	5.8
Winged screws		316	4.6
Screw plugs		906 908	4.6
		910 7604	5.6[4]
Hollow screws		7623 71436	6.8
Cap screws		3871	5.6[4]
Slotted plugs		71022	5.6[4]

Nuts

Description	shape	DIN No.	Strength rating
Hexagon nuts		439	[5]
		985	8 10[4]
		934	[3]
		936	6G 8G
		70615 70616	8/10[4] 6G/8G[4]
Castellated nuts		935 937	8/10 6S/8G
Wing nuts		315	GTS

Description	shape	DIN No.	Strength rating
Square nuts		557	5–2
		562	4D–2
Cap nuts		986	8[4]
		1587	6–2
Slotted nuts		70851 70852	6G[4]
Screw caps		3870 7606	5D–2[4]
Knurled nuts		466 467	5–2
Ball collar nuts Flat collar nuts		74361	8/10

[1] Case hardened steel, tempered file-hard, depth of case 0.1 . . . 0.2 mm (0.004 . . . 0.008")
[2] up to M 10: 4.8, from M 12: 4.6
[3] up to M 4: 5–2, from M 5: 8 and 10
[4] The stipulated strength characteristics deviate from the DIN specification
[5] up to M 8: 4D-2, for M 10: 5S-2

Engine oil - circuit diagram

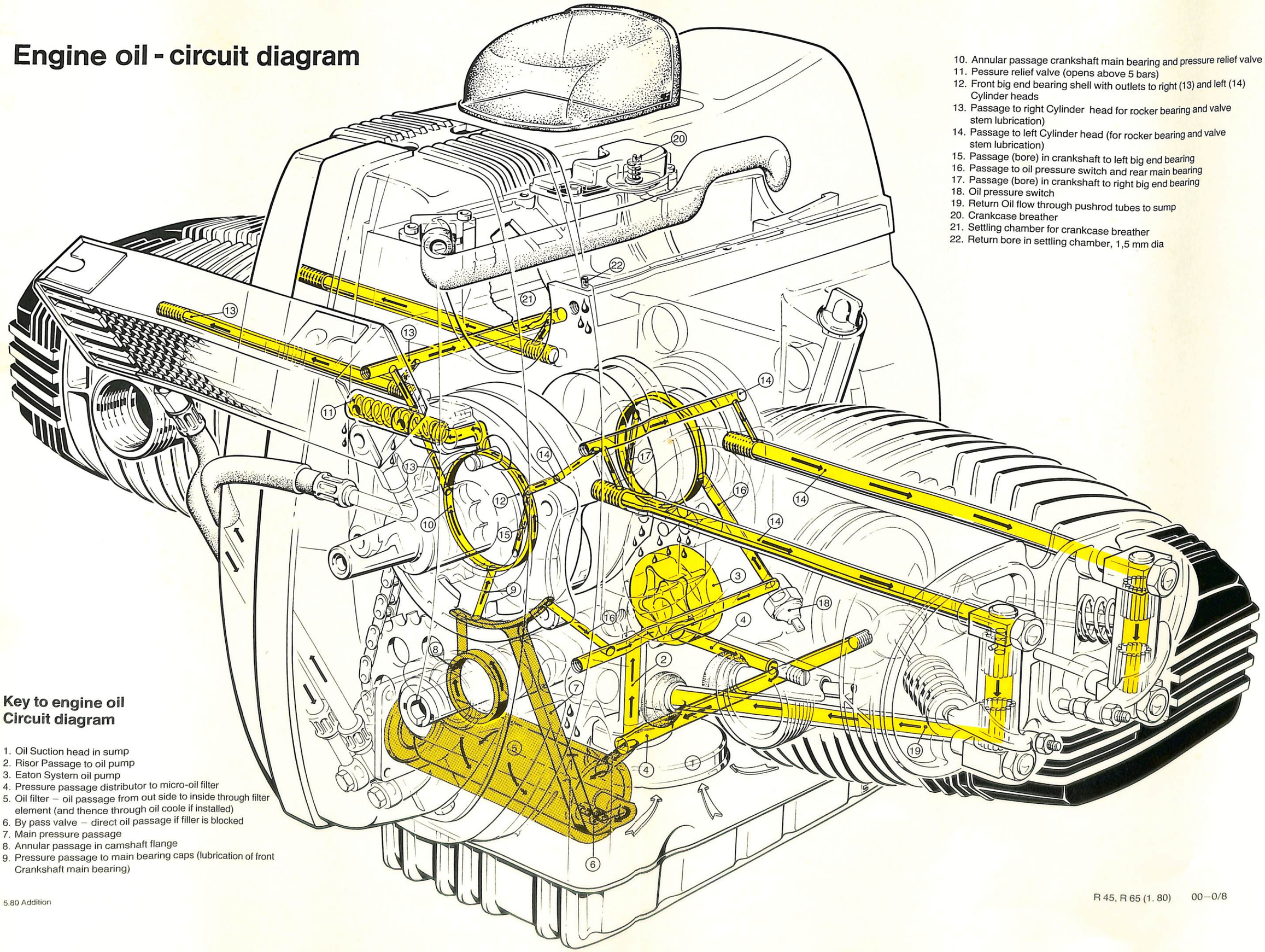

10. Annular passage crankshaft main bearing and pressure relief valve
11. Pessure relief valve (opens above 5 bars)
12. Front big end bearing shell with outlets to right (13) and left (14) Cylinder heads
13. Passage to right Cylinder head for rocker bearing and valve stem lubrication)
14. Passage to left Cylinder head (for rocker bearing and valve stem lubrication)
15. Passage (bore) in crankshaft to left big end bearing
16. Passage to oil pressure switch and rear main bearing
17. Passage (bore) in crankshaft to right big end bearing
18. Oil pressure switch
19. Return Oil flow through pushrod tubes to sump
20. Crankcase breather
21. Settling chamber for crankcase breather
22. Return bore in settling chamber, 1,5 mm dia

Key to engine oil Circuit diagram

1. Oil Suction head in sump
2. Risor Passage to oil pump
3. Eaton System oil pump
4. Pressure passage distributor to micro-oil filter
5. Oil filter – oil passage from out side to inside through filter element (and thence through oil coole if installed)
6. By pass valve – direct oil passage if filler is blocked
7. Main pressure passage
8. Annular passage in camshaft flange
9. Pressure passage to main bearing caps (lubrication of front Crankshaft main bearing)

Tightening Torque Survey for R 65 and R 65 LS

	Nm
Engine	
Cylinder head nuts (in 3 steps: 15/25/35 Nm)	35 + 4
Connecting rod bolts	50 ± 2
Clutch housing (flyheel)	100 + 5
Nut for valve adjusting screw	20 ± 2
Adapter for carburetor connection	50
Oil drain plug	30 + 5
Engine Electrical Equipment	
Alternator rotor mounting screw	25 ± 2
Spark plugs	20 + 5
Starter mounting bolts	47.5
Exhaust system	
Spider nuts for exhaust pipes	200 + 20
Clutch	
Clutch housing cover	20 + 2
Manual Transmission	
Connection on engine	33
Connection on console	19
Output flange to transmission output shaft	221.5
Transmission cover to transmission case	8
Nut (wedge bolt) on kick starter lever	22.5
Oil filler plug	31
Oil drain bolt	26
Propeller Shaft	
Twelve-sided head bolts	40
Front Wheel Fork	
Fork bridge mounting bolts	40 + 5
Absorber mounting bolts in slide tube	35 ± 5
Plug	80 + 10
Oil filler bolts	9
Oil drain bolts	8
Steering	
Plug	80 + 10
Round nut	no play

Tightening Torque Survey for R 65 and R 65 LS

Continued:

Rear Wheel Drive with Swinging Arm	**Nm**
Nut on drive pinion	165
Threaded ring in final drive housing cover	118
Nuts for final drive housing cover	17.7
Oil level inspection plug on final drive housing	10
Oil drain plug on final drive housing	25.5
Shaft bolt of rear wheel swinging arm	10 + 2
Lock nut for swinging arm shaft bolt	100 + 20
Oil filler plug on rear wheel swinging arm	finger tight
Oil drain plug on rear wheel swinging arm	15.7
Shock absorber rod to spring strut eye	38 ± 2
Mounting nuts (twelve sided) for final drive housing to rear wheel swinging arm	47
Spring strut mounting bolts	35 + 5
Brakes	
Brake line to brake master cylinder	8 + 2
Brake line to brake caliper	8 + 2
Brake line to brake hose	12 + 3
Wheels and Tires	
Friction torque of wheel bearings with front wheel axle nuts tightened to specified torque	0.15 ... 0.30
Stub axle nuts	48
Axle bolts	17

Standard Units of Measurement

Measurement		Unit symbols Old	Unit symbols New	Relations		
Length		m	m	1 m = 1000 mm	1 km = 1000 m	1 μm = 0,001 mm
Area		m^2 qm	m^2	1 m^2 = 10^6 mm^2	1 mm^2 = 0,01 cm^2	
Volume		m^3 cbm	m^3	1 m^3 = 10^6 cm^3	1 dm^3 = 0,001 m^3	
		l	l	1 l = 1 dm^3		
Angle	plain	°	°,rad	1 rad = 1 m/m ≈ 57°	1° = π/180 rad	
	solid	$(°)^2$	sr	1 sr = 1 m^2/m^2	$(1°)^2$ = $(\pi 180)^2$ sr	
Mass		kg	kg	1 kg = 1000 g	1 g = 1000 mg	1 t = 1 Mg = 1000 kg
Density		kg/m^3	kg/m^3	1 kg/m^3 = 0,001 kg/dm^3		1 kg/dm^3 = 1 kg/l
Imbalance		kgm	kgm	1 kgm = 1000 000 gmm		
Time		sec s	s	1 min = 60 s	1 h = 60 min	
Speed		U/sec U/min	1/s 1/min	1 U/min = 1/min	1/min = 1/(60s)	
Velocity		m/s	m/s	1 m/s = 3,6 km/h		
Acceleration		m/s^2	m/s^2			
Force		kp	N	1 N = 1 kgm/s^2	1 kp = 9,81 N	
Pressure (gas, liquid)		at kp/cm^2 mWS Torr mmHg	N/m^2 Pa bar	1 at = 1 kp/cm^2 = 0,981 bar = 98 066,5 Pa 1 m WS = 9 806,65 Pa = 9 806,65 N/cm^2 1 Torr = 1,333 224 mbar 1 mmHg = 133,322 Pa = 133,322 N/m^2		
Mechanical load		kp/mm^2	N/m^2 Pa N/mm^2	1 N/m^2 = 1 Pa 1 kp/mm^2 = 9,81 N/mm^2		
Energy, Work, Heat value		kpm hph cal	J kWh	1 J = 1 Nm 1 cal = 4,1868 J	1 kWh = 3,6 MJ	1 kpm = 9,81 J
Torque		kpm	Nm	1 kpm = 9,81 Nm		
Power		hp kpm/s kcal/h	kW Nm/s	1 kW = 1000 W 1 hp = 736 W = 75 kpm/s = 632 kcal/h 1 kW = 1,36 PS = 102 kpm/s = 860 kcal/h = 0,239 kcal/s	1 W = 1 Nm/s = 1 J/s	
Viscosity	dynamic	P	Pas	1 Pas = 1 Ns/m^2	1 P = 0,1 Pas = 1 g/cms	
	kinematic	St	m^2/s	1 m^2/s = 1 Pas m^3/kg	1 St = 1 cm^2/s = 0,0001 m^2/s	
Temperature		deg. °C °K	°C K	0 °C ≙ 273,15 K 1deg.= 1° K = 1 K = 1° C (temperature difference)		
Electric current		A	A	1 mA = 0,001 A	1 kA = 1000 A	
Electric voltage		V	V	1 V = 1 W/A	1 m V = 0,001 V	1 MV = 10^6 V
Electric resistance		Ω	Ω	1 Ω = 1 V/A = 1/S		
Magnetic flux		M	Wb, Vs	1 Wb = 1 Vs	1 M = 10^{-8} Wb	
Magnetic flux density		G	T	1 T = Wb/m^2	1 G = 10^{-4} T	
Magnetic field strength		0e	A/m	1 A/m = 1 N/Wb	10 e = $10^3/4\pi$ A/m	
Luminous intensity		HK	cd	1 cd = 1,107 HK	1 HK = 0,903 342 cd	
Luminance		sb	cd/m^2	1 sb = 10^4 cd/m^2		
Density of light		ph	lx	1 ph = 10^4 lx		

Determining Engine Oil Consumption

Oil consumption measurements can be after motorcycle has been riden about 7.500 km (5.000 miles).
This distance is required before the oil consumption will be steady.
Engine must not leak oil.
Drain engine oil at operating temperature.
Replace the filter cartridge.
Fill engine with new oil.
Ride motorcycle under normal conditions until oil level has dropped to lower mark on oil dipstick.
Difference between MIN and MAX marks = 0.85 liter.
If necessary determine oil consumption by measuring consumed volume by weight.
Permissible oil consumption: 0.1 ltr./100 km.

Possible Causes for Excessive Oil Consumption:

1. Breaking-in process not concluded.
2. Valve guides leak.
3. Pistons seized.
4. Piston rings installed wrong, broken or worn.
5. Excessive play between valve stem and valve guide.

Determining Fuel Consumption acc. DIN 70030

Engine tuning and ignition timing[1]) of motorcycle must conform with standard version.
Tire size must agree with data in vehicle's registration papers.
Correct tire inflation pressure as specified.
Brakes released completely.
Engine operated at least 7.500 km (5.000 miles) and at operating temperature.
For fuel consumption test motorcycle weight must be half that between maximum total weight and curbweight.
The speed must be kept as constantly as possible and about $^3/_4$ths of the maximum speed over the entire test stretch.
Testing speed, however, should not exceed 110 km/h.
The test stretch chosen should have a level as possible surface, be dry and about 10 km long, which must be driven in both directions.
Uphill and downhill gradients up to 1.5 % are permissible.
The air temperature must be between +10 and +30°C and the wind velocity may be maximum 3 meters per second.
The motorcycle tank must be filled with commercial brand name gasoline as called for in plant specifications.

The fuel consumption is measured with a standard tester or by the following formula, whereby 10 % is added to cover any unfavorable conditions.

$$\frac{\text{Consumed fuel} \times 100}{\text{Driven km}} = \text{Normal fuel consumption}$$

[1]) See Specifications

Engine Oil Viscosity Diagram
Depending on Outside Temperature

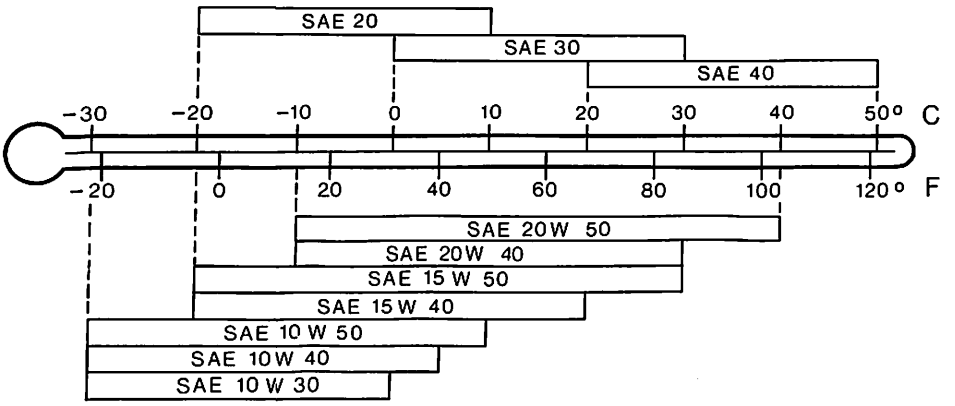

Application:

Brand name, heavy duty oil of API Classification SE or SF for internal combustion engines.

Engine Oil Circuit

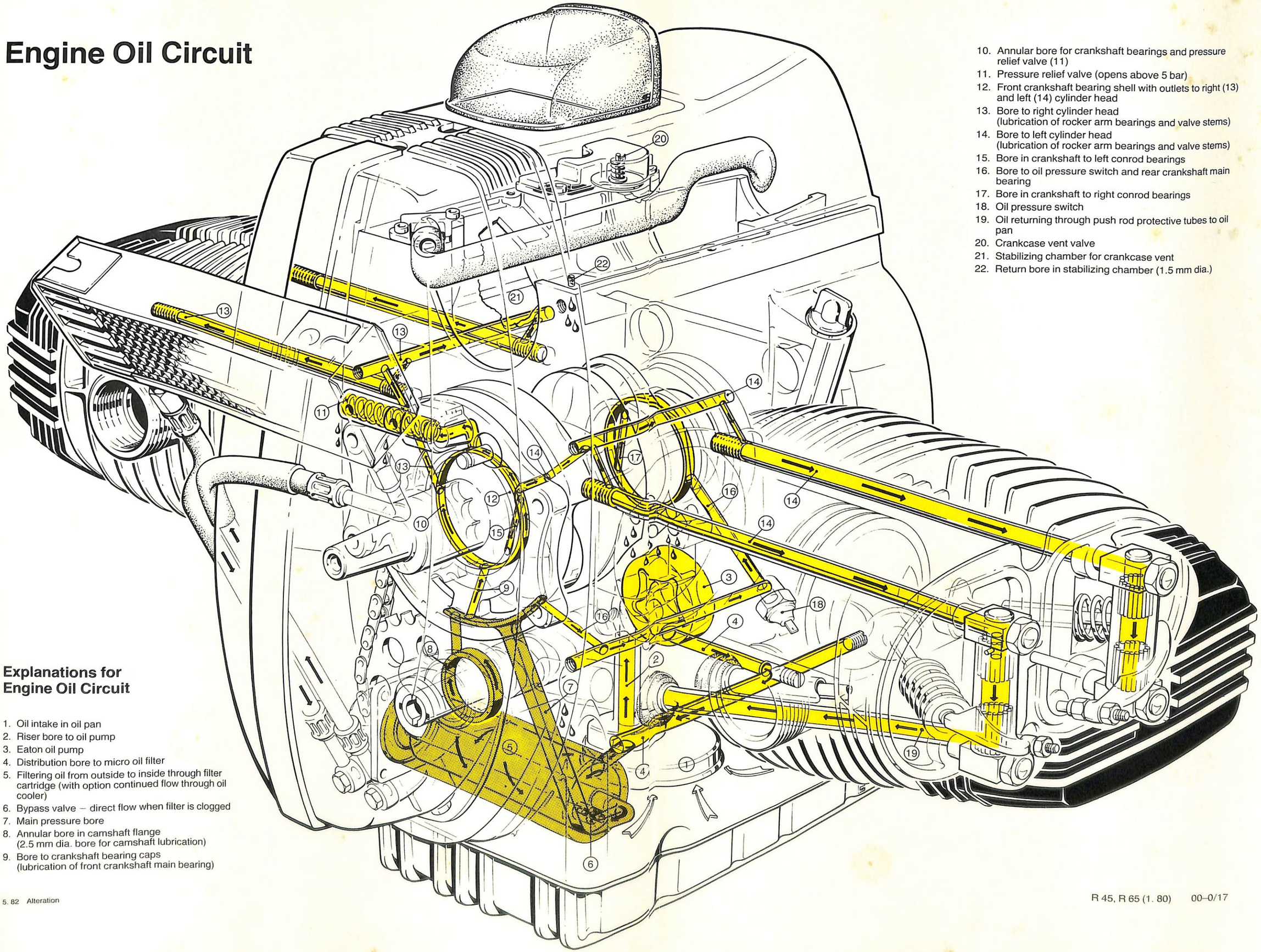

10. Annular bore for crankshaft bearings and pressure relief valve (11)
11. Pressure relief valve (opens above 5 bar)
12. Front crankshaft bearing shell with outlets to right (13) and left (14) cylinder head
13. Bore to right cylinder head (lubrication of rocker arm bearings and valve stems)
14. Bore to left cylinder head (lubrication of rocker arm bearings and valve stems)
15. Bore in crankshaft to left conrod bearings
16. Bore to oil pressure switch and rear crankshaft main bearing
17. Bore in crankshaft to right conrod bearings
18. Oil pressure switch
19. Oil returning through push rod protective tubes to oil pan
20. Crankcase vent valve
21. Stabilizing chamber for crankcase vent
22. Return bore in stabilizing chamber (1.5 mm dia.)

Explanations for Engine Oil Circuit

1. Oil intake in oil pan
2. Riser bore to oil pump
3. Eaton oil pump
4. Distribution bore to micro oil filter
5. Filtering oil from outside to inside through filter cartridge (with option continued flow through oil cooler)
6. Bypass valve – direct flow when filter is clogged
7. Main pressure bore
8. Annular bore in camshaft flange (2.5 mm dia. bore for camshaft lubrication)
9. Bore to crankshaft bearing caps (lubrication of front crankshaft main bearing)

11 Engine

Specifications		Page 11– 0/ 3
Specifications – 1981 models		11– 0/19
11 00 039	Compression – check	11–00/ 1
11 00 050	Engine – remove and install	11–00/ 3
11 11 050	Cylinder – remove and install	11–11/ 1
11 11 527	Cylinder – drill and hone	11–11/ 2
11 12 080	Cylinder head – remove and install	11–12/ 1
11 12 513	Cylinder head – disassemble and assemble plus grinding in valves	11–12/ 2
11 12 561	Valve guides – replace	11–12/ 3
11 12 621	Valve seat insert (one) – replace	11–12/ 3
11 14 060	Timing case cover – remove and install	11–14/ 1
11 14 651	Radial oil seal for crankshaft – replace	11–14/ 1
11 15 101	Engine vent hose – replace	11–15/ 1
11 15 101	Engine vent hose – replace ('81 mod.)	11–15/ 2
11 15 111	Check valve for engine vent – replace	11–15/ 1
11 21 001	Crankshaft – replace	11–21/ 1
11 21 531	Main bearing sleeves – replace	11–21/ 3
11 22 000	Flywheel – remove and install	11–22/ 1
11 22 000	Clutch housing (flywheel) – remove and install (1981 models)	11–22/ 3
11 24 000	Connecting rod – remove and install	11–24/ 1
11 25 000	Piston – remove and install	11–25/ 1
11 31 061	Sprocket set – replace	11–31/ 1
11 34 504	Valve clearances – adjust	11–34/ 1
11 41 000	Oil pump – remove and install	11–41/ 1
	Engine – troubleshoot	11–42/ 3

Engine

Specifications

Model	R 65
Engine design	Four stroke flat engine with V-shaped overhead valves
Location of engine number	On engine block above oil filler neck
Cylinder bore dia. in mm (in.)	82 (2.756)
Piston stroke in mm (in.)	61.5 (2.421)
Number of cylinders	2
Cylinder arrangement	Opposite
Stroke/bore ratio	0.75
Fiscal displacement in cm^3 ($in.^3$)	645 (39.3)
Effective displacement in cm^3 ($in.^3$)	649.6 (39.6)
Compression ratio	9.2 : 1
Max. output in kW (DIN HP) at rpm	33 (45) 7250
Max. permissible constant speed in rpm	7300
Max. permissible top speed in rpm	7650
Idle speed in rpm	800 . . . 1100
Max. permissible speed while breaking in motorcycle up to 1000 km/600 miles in rpm up to 2000 km/1200 miles in rpm	4000 4500
Direction of rotation	Looking at alternator clockwise
Max. torque in Nm/mkp/ft lbs at rpm	50/5.1/37 at 5500

Engine

Specifications

Model	R 65
Mean piston speed m/s at rpm	14.8 7250
Compression in bar (psi) good normal poor	above 10.0 (142) 8.5 . . . 10.0 (121 . . . 142) below 8.5 (121)
Instructions for checking compression (motorcycle with starter)	1. Unscrew spark plugs. 2. Check compression with a calibrated compression tester, fully charged battery, engine having operating temperature and running at starter speed. Remove equal pressure carburetor prior to testing!
Fuel	Premium grade
Fuel consumption in ltr/100 km (mpg) acc. to DIN 70030 at 110 km/h (70 mph)	4.6 (51)

Engine

Specifications

Model	R 65
Engine Lubrication Lubricating system	Forced oil circulation
Oil filter	Full flow
Pressure difference to open bypass valve in bar (psi)	1.5 (21)
Oil pressure indicator lamp comes on at pressure below bar (psi)	0.2 . . . 0.5 (3 . . . 7)
Opening pressure of safety valve in bar (psi)	approx. 5.0 (71)
Oil volume in ltr. (pints) without filter replacement with filter replacement	 2.0 (4.23) 2.25 (4.75)
Max. oil consumption in ltr./100 km (mpg)	0.1 (2350)
Oil grade Viscosity for outside temperatures chiefly above +30° C (86° F) above 0° C (32° F) below 0° C (32° F) **All year down to – 20° F (– 4° F)**	Brand name heavy duty oil for internal combustion engines SAE 40, SAE 20 W 50 SAE 20 W 40, SAE 20 W 50 SAE 10 W 30, SAE 10 W 40, SAE 10 W 50 SAE 15 W 50
Oil Pump Design	Eaton System (hypoid-trochoid spline)
Delivery rate in ltr. (qts)/h at rpm	1400 (1480) at 6000
Outer rotor dia. in mm (in.)	57 ± 0.05 (2.280 ± 0.002)
Housing inside dia. in mm (in.)	$57.2^{+0.046}_{0}$ ($2.2520^{+0.0018}_{0}$)
Outer rotor/pump housing play in mm (in.)	0.15 . . . 0.29 (0.006 . . . 0.011)

Engine

Specifications

Model	R 65
Rotor height in mm (in.)	$14^{-0.015}_{-0.045}$ ($0.5512^{-0.0006}_{-0.0018}$)
Housing depth in mm (in.)	$14^{+0.025}_{+0.010}$ ($0.5512^{+0.0010}_{+0.0004}$)
Play between mating surface (pump housing) and sealing surface (rotor) in mm (in.)	0.025 . . . 0.070 (0.0010 . . . 0.0027)
Inner/outer rotor clearance in mm (in.)	0.12 . . . 0.20 (0.005 . . . 0.008)
Max. scoring depth in cover in mm (in.)	0.5 (0.002)
Relaxed spring length in mm (in.)	68 (2.677)
Valve Clearance Adjustment on cold engine (max. 20°C/54°F) Intake valve in mm (in.) Exhaust valve in mm (in.)	 0.10 (0.004) (0.15 (0.006) up to 1000 km (600 mile) insp.) 0.20 (0.008) (0.25 (0.010) up to 1000 km (600 mile) insp.)
Valve timing (tolerance ± 2.5°)	Control shaft device with 2 mm (0.080") valve clearance
Intake opens before TDC	308° Camshaft 16°
Intake closes after BDC	44°
Exhaust opens before BDC	56°
Exhaust closes after TDC	4°
Valves Total valve length in mm (in.) Intake Exhaust	 100±0.2 (3.937±0.008) 99.3±0.2 (3.909±0.008)
Intake valve head dia. in mm (in.)	38 (1.496)
Exhaust valve head dia. in mm (in.)	34 (1.338)
Intake valve stem dia. in mm (in.)	6.96 – 0.015 (0.2784 – 0.0006)

Engine

Specifications

Model	R 65
Engine Lubrication Lubricating system	Forced oil circulation
Oil filter	Full flow
Pressure difference to open bypass valve in bar (psi)	1.5 (21)
Oil pressure indicator lamp comes on at pressure below bar (psi)	0.2 . . . 0.5 (3 . . . 7)
Opening pressure of safety valve in bar (psi)	approx. 5.0 (71)
Oil volume in ltr. (pints) without filter replacement with filter replacement	 2.0 (4.23) 2.25 (4.75)
Max. oil consumption in ltr./100 km (mpg)	0.1 (2350)
Oil grade Viscosity for outside temperatures chiefly above +30° C (86° F) above 0° C (32° F) below 0° C (32° F) **All year down to − 20° F (− 4° F)**	Brand name heavy duty oil for internal combustion engines SAE 40, SAE 20 W 50 SAE 20 W 40, SAE 20 W 50 SAE 10 W 30, SAE 10 W 40, SAE 10 W 50 SAE 15 W 50
Oil Pump Design	Eaton System (hypoid-trochoid spline)
Delivery rate in ltr. (qts)/h at rpm	1400 (1480) at 6000
Outer rotor dia. in mm (in.)	57 ± 0.05 (2.280 ± 0.002)
Housing inside dia. in mm (in.)	$57.2^{+0.046}_{0}$ ($2.2520^{+0.0018}_{0}$)
Outer rotor/pump housing play in mm (in.)	0.15 . . . 0.29 (0.006 . . . 0.011)

Engine

Specifications

Model	R 65
Rotor height in mm (in.)	$14^{-0.015}_{-0.045}$ ($0.5512^{-0.0006}_{-0.0018}$)
Housing depth in mm (in.)	$14^{+0.025}_{+0.010}$ ($0.5512^{+0.0010}_{+0.0004}$)
Play between mating surface (pump housing) and sealing surface (rotor) in mm (in.)	0.025 . . . 0.070 (0.0010 . . . 0.0027)
Inner/outer rotor clearance in mm (in.)	0.12 . . . 0.20 (0.005 . . . 0.008)
Max. scoring depth in cover in mm (in.)	0.5 (0.002)
Relaxed spring length in mm (in.)	68 (2.677)
Valve Clearance Adjustment on cold engine (max. 20°C/54°F) Intake valve in mm (in.) Exhaust valve in mm (in.)	 0.05 (0.002) (0.15 (0.006) up to 1000 km (600 mile) insp.) 0.20 (0.008) (0.25 (0.010) up to 1000 km (600 mile) insp.)
Valve timing (tolerance ± 2.5°)	Control shaft device with 2 mm (0.080") valve clearance
Intake opens before TDC	308° Camshaft 16°
Intake closes after BDC	44°
Exhaust opens before BDC	56°
Exhaust closes after TDC	4°
Valves Total valve length in mm (in.) Intake Exhaust	 100±0.2 (3.937±0.008) 99.3±0.2 (3.909±0.008)
Intake valve head dia. in mm (in.)	38 (1.496)
Exhaust valve head dia. in mm (in.)	34 (1.338)
Intake valve stem dia. in mm (in.)	6.96 – 0.015 (0.2784 – 0.0006)

Engine

Specifications

Model	R 65
Exhaust valve stem dia. in mm (in.)	6.96 – 0.015 (0.2784 – 0.0006)
Min. valve head edge thickness in mm (in.) Intake Exhaust	 $1.0^{+0.5}$ $(0.040^{+0.020})$ $1.2_{-0.2}$ $(0.047_{-0.008})$
Max. valve head runout in mm (in.)	0.02 (0.0008)
Valve Seat Insert Intake valve outside dia. in mm (in.)	39.2 h 7 (1.5433)
Exhaust valve outside dia. in mm (in.)	39.2h7 (1.6433)
Valve seat insert bore dia. in cylinder head in mm (in.) Intake Exhaust	 39 H 7 (1.5354) 39 H 7 (1.6354)
Valve seat angle in degrees	$90° - 20'$
Valve Seat Width (reference value) Intake in mm (in.)	approx. 1.2 + 0.2 (0.048 + 0.008)
Exhaust in mm (in.)	approx. 1.4 + 0.2 (0.056 + 0.008)

Engine

Specifications

Model	R 65
Oversize valve seat inserts in mm (in.)	0.2 (0.008)
Valve Guide Total length in mm (in.) Intake Exhaust	 42 (1.680) 42 (1.680)
Outside dia. in mm (in.)	14 z 6 (0.5512)
Inside dia. in mm (in.)	7 H 7 (0.2756)
Bore dia. in cyl. head in mm (in.)	14 H 7 (0.5512)
1st oversize dia. in mm (in.)	14.1 z 6 (0.5551)
2nd oversize dia. in mm (in.)	14.2 z 6 (0.5590)
Valve Stem Clearance in mm (in.) Intake	0.025 . . . 0.055 (0.0010 . . . 0.0022)
Exhaust	0.04 . . . 0.07 (0.0016 . . . 0.0027)
Max. wear in mm (in.)	0.1 (0.004) measured at top end of valve guide
Valve Drive Valve operation	By camshaft via cam followers, push rods and rocker arms
Camshaft drive	Single roller chain 3/8 x 7/32" with connecting link and chain tensioner with hydr. oil lubrication
Number of links	50

Engine

Specifications

Model	R 65
Valve Springs Wire gage dia. in mm (in.)	4.25 (0.167)
Outside coil dia. in mm (in.)	31.9 (1.256)
Relaxed spring length in mm (in.)	brown code approx. 46 or 43.5 for blue code
Spring force in kp (lbs) with test length in mm (in.)	29 (64) at 37.6 (1.480) 70 (154) at 28.5 (1.122)
Wound direction	clockwise
Number of active coils	4.6 or 4
Total number of coils	6
Compressed length in mm (in.)	25 (0.984)
Installed direction	Coils marked with paint stripes face cylinder head
Rocker Arms	With needle bearings
Axial play of rocker arm	Without play, but easy movement
Rocker arm ratio	1 : 1.39

Engine

Specifications

Model	R 65
Camshaft Flange bearing bore dia. in engine block in mm (in.)	$40^{+0.039}_{0}$ ($1.5748^{+0.0015}_{0}$)
Flange bearing outside dia. in mm (in.)	$40^{0}_{-0.016}$ ($1.5748^{0}_{-0.0006}$)
Flange bearing bore dia. in mm (in.)	$25^{+0.013}_{0}$ ($0.9842^{+0.0005}_{0}$)
Camshaft bearing journal dia. on alternator end in mm (in.)	$25^{-0.020}_{-0.033}$ ($0.9842^{-0.0008}_{0.0013}$)
Camshaft bearing bore dia. in engine block on flywheel end in mm (in.)	$24^{+0.021}_{0}$ ($0.9449^{+0.0008}_{0}$)
Camshaft bearing journal dia. on flywheel end in mm (in.)	$24^{-0.020}_{-0.033}$ ($0.9449^{-0.0008}_{-0.0013}$)
Alternator or flywheel end radial play in mm	0.02 . . . 0.046 (0.0008 . . . 0.0018) or 0.02 . . . 0.054 (0.0008 . . . 0.0021)
Axial play (play between camshaft collar/flange bearing) in mm (in.)	0.1±0.02 (0.0040±0.0008)
Cam base circle dia. in mm (in.)	28 (1.102)
Cam lift in mm (in.)	6.756 (0.266)
Tappet outside dia. in mm (in.)	$22^{-0.025}_{-0.045}$ ($0.8661^{-0.0010}_{-0.0018}$)
Tappet bore dia. in engine block in mm (in.)	$22^{+0.006}_{-0.015}$ ($0.8661^{+0.0002}_{-0.0006}$)
Radial play of tappet in mm (in.)	0.01 . . . 0.051 (0.004 . . . 0.0020)
Max. permissible tappet wear in mm (in.)	0.075 (0.0029)

Specifications

Model			R 65	
Crankshaft and Bearings Crankshaft			**Main Bearing Journal Dia. in mm (in.)** **Alternator End**	**Flywheel End**
Crankshaft color code		red/red	59.980 . . . 59.990 (2.3614 . . . 2.3618)	59.980 . . . 59.990 (2.3614 . . . 2.3618)
Standard	0	red/blue	59.980 . . . 59.990 (2.3614 . . . 2.3618)	59.971 . . . 59.980 (2.3610 . . . 2.3614)
		blue/red	59.971 . . . 59.980 (2.3610 . . . 2.3614)	59.980 . . . 59.990 (2.3614 . . . 2.3618)
		blue/blue	59.971 . . . 59.980 (2.3610 . . . 2.3614)	59.971 . . . 59.980 (2.3610 . . . 2.3614)
1st Undersize	0.25 (0.010)	red/red	59.730 . . . 59.740 (2.3516 . . . 2.3520)	59.730 . . . 59.740 (2.3516 . . . 2.3520)
		red/blue	59.730 . . . 59.740 (2.3516 . . . 2.3520)	59.721 . . . 59.730 (2.3512 . . . 2.3516)
		blue/red	59.721 . . . 59.730 (2.3512 . . . 2.3516)	59.730 . . . 59.740 (2.3516 . . . 2.3520)
		blue/blue	59.721 . . . 59.730 (2.3512 . . . 2.3516)	59.721 . . . 59.730 (2.3512 . . . 2.3516)
2nd Undersize	0.50 (0.020)	red/red	59.480 . . . 59.490 (2.3417 . . . 2.3421)	59.480 . . . 59.490 (2.3417 . . . 2.3421)
		red/blue	59.480 . . . 59.490 (2.3417 . . . 2.3421)	59.471 . . . 59.480 (2.3414 . . . 2.3417)
		blue/red	59.471 . . . 59.480 (2.3414 . . . 2.3417)	59.480 . . . 59.490 (2.3417 . . . 2.3421)
		blue/blue	59.471 . . . 59.480 (2.3414 . . . 2.3417)	59.471 . . . 59.480 (2.3414 . . . 2.3417)
3rd Undersize	0.75 (0.030)	red/red	59.230 . . . 59.240 (2.3319 . . . 2.3323)	59.230 . . . 59.240 (2.3319 . . . 2.3323)
		red/blue	59.230 . . . 59.240 (2.3319 . . . 2.3323)	59.221 . . . 59.230 (2.3315 . . . 2.3319)
		blue/red	59.221 . . . 59.230 (2.3315 . . . 2.3319)	59.230 . . . 59.240 (2.3319 . . . 2.3323)
		blue/blue	59.221 . . . 59.230 (2.3315 . . . 2.3319)	59.221 . . . 59.230 (2.3315 . . . 2.3319)
Bore for crankshaft main bearing bushing in engine block, dia. in mm			$65^{+0.019}_{0}$ $(2.5590^{+0.0007}_{0})$	
Bore for crankshaft main bearing bushing in bearing cap, dia. in mm			$65^{+0.019}_{0}$ $(2.5590^{+0.0007}_{0})$	
Main bearing journal radial play in mm (in.)			red 0.017 ÷ 0.066 (0.0006 . . . 0.0026	blue 0.019 ± 0.067 (0.0007 . . . 0.0026)
Front crankshaft bearing seat dia. in mm (in.)			$35^{+0.025}_{+0.009}$ $(1.3779^{+0.0010}_{+0.0003})$	
Bearing seat bore dia. in timing case cover in mm (in.)			$62^{-0.009}_{-0,39}$ $(2.4409^{-0.0003}_{-0.0153})$	

Engine

Specifications

Model			R 65	
Main Bearing Bushing Wall thickness in mm (in.) Standard	0	red blue	2.500 . . . 2.510 (0.09842 . . . 0.09882) 2.504 . . . 2.514 (0.10016 . . . 0.10056)	
1st Oversize	0.25 (0.010)	red blue	2.625 . . . 2.635 (0.10334 . . . 0.10374) 2.629 . . . 2.639 (0.10516 . . . 0.10556)	
2nd Oversize	0.50 (0.020)	red blue	2.750 . . . 2.760 (0.10827 . . . 0.10866) 2.754 . . . 2.764 (0.11016 . . . 0.11056)	
3rd Oversize	0.75 (0.030)	red blue	2.875 . . . 2.885 (0.11319 . . . 0.11358) 2.879 . . . 2.889 (0.11516 . . . 0.11556)	
Engine block			dia. A (crankshaft bearing bore) 65 H 6 65.000 . . . 65.019	dia. B (bearing cap bore) $130^{+0.026}_{-0.007}$ 129.993 . . . 130.026
Crankshaft bearing dia. in mm with bearing pressed in			red 60.007 . . . 60.046	blue 59.999 . . . 60.038
Bearing cap			65.000 . . . 65.019	130.003 . . . 130.028

Engine

Specifications

Model	R 65
Crankshaft seat dia. for sprocket in mm (in.)	$35.003^{+0.020}_{+0.009}$ ($1.3781^{+0.0008}_{+0.0003}$)
Sprocket take-up bore dia. in mm (in.)	$35.003^{+0.003}_{-0.013}$ ($1.3781^{+0.0001}_{-0.0005}$)
Crankshaft axial play in mm (in.)	0.08 . . . 0.15 (0.0031 . . . 0.0059)
Thrust washer Red thickness "S" in mm (in.) Blue thickness "S" in mm (in.) Green thickness "S" in mm (in.) Yellow thickness "S" in mm (in.) Max. permissible wear limit in mm (in.).	 2.483 . . . 2.530 (0.0977 . . . 0.0996) 2.530 . . . 2.578 (0.0996 . . . 0.1015) 2.578 . . . 2.626 (0.1015 . . . 0.1034) 2.626 . . . 2.673 (0.1034 . . . 0.1052) 0.20 (0.008)
Max. runout on shaft journal (alternator end) outside taken up on main bearing journals in mm (in.)	0.02 (0.0008)
Max. dynamic unbalance of crankshaft (without flywheel) in cmp	20
Max. lateral runout on flywheel in mm (in.)	0.1 (0.004)
Connecting Rods and Bearings	Thrust journal dia. in mm (in.)
Standard 0	$48.00^{-0.009}_{-0.025}$ ($1.8898^{-0.0003}_{-0.0010}$)
Undersize 1 0.25 (0.010)	$47.75^{-0.009}_{-0.025}$ ($1.8799^{-0.0003}_{-0.0010}$)
Undersize 2 0.50 (0.020)	$47.50^{-0.009}_{-0.025}$ ($1.8701^{-0.0003}_{-0.0010}$)
Undersize 3 0.75 (0.030)	$47.25^{-0.009}_{-0.025}$ ($1.8602^{-0.0003}_{-0.0010}$)
Big end dia. in mm (in.)	$52.00^{+0.015}_{0}$ ($2.0472^{0.0006}_{0}$)
Conrod bearing radial play in mm (in.)	0.023 . . . 0.069 (0.0009 . . . 0.0027)
Big end conrod width in mm (in.)	$22.00^{-0.065}_{-0.117}$ ($0.8661^{-0.0025}_{-0.0046}$)
Thrust journal bearing width in mm (in.)	$22.00^{+0.149}_{+0.065}$ ($0.8661^{+0.0059}_{+0.0025}$)
Conrod axial play in mm (in.)	0.130 . . . 0.266 (0.0051 . . . 0.0105)
Max. axial wear limit in mm (in.)	0.32 (0.012)

Engine

Specifications

Model	R 65
Distance between big and small end bore center lines in mm (in.)	118 (4.645)
Small end bore dia. in mm (in.)	$24^{+0.021}_{0}$ ($0.9449^{+0.0008}_{0}$)
Conrod bushing outside dia. in mm (in.)	24.060 . . . 24.100 (0.9472 . . . 0.9488)
Piston pin bore dia in conrod bushing in mm (in.)	$22^{+0.020}_{+0.015}$ ($0.8661^{+0.0008}_{+0.0006}$)
Piston pin bore wear limit dia. in conrod bushing in mm (in.)	$22^{+0.040}_{0}$ ($0.8661^{+0.0016}_{0}$)
Max. deviation from parallel for conrod bores with bearing shells at distance of 150 mm (5.905") in mm (in.)	0.04 (0.0016)
Max. displacement of conrod bores at distance of 150 mm (5.905") in mm (in.)	1.5 (0.060)
Max. difference in weight of both connecting rods in g	± 3
Cylinders	
Bore dia. Standard A in mm (in.)	81.995 ÷ 82.005 (3.2281 ÷ 3.2285)
B in mm (in.)	82.005 ÷ 82.015 (3.2285 ÷ 3.2289)
C in mm (in.)	82.015 ÷ 82.025 (3.2289 ÷ 3.2293)
1st Oversize + 0.25 mm (0.010") A in mm (in.)	82.245 ÷ 82.255 (3.2380 ÷ 3.2384)
B in mm (in.)	82.255 ÷ 82.265 (3.2384 ÷ 3.2388)
C in mm (in.)	82.265 ÷ 82.275 (3.2388 ÷ 3.2391)
2nd Oversize + 0.50 mm (0.020") A in mm (in.)	82.495 ÷ 82.505 (3.2478 ÷ 3.2482)
B in mm (in.)	82.505 ÷ 82.515 (3.2482 ÷ 3.2486)
C in mm (in.)	82.515 ÷ 82.525 (3.2486 ÷ 3.2490)
Surface finish in μm	3–7

Engine

Specifications

Model	R 65
Max. cyl. bore ovality in mm (in.)	The toleranced surface must be between two coaxial cylinders, which have a radial distance of 0.005 (0.0002)
Pistons Piston shape	spherical increasing to oval
Piston assembly weight classes	+ or – stamped Only install pistons of one weight class!
Piston dia. in mm (in.) Standard A B C	81.955 ÷ 81.965 (3.2265 ÷ 3.2269) 81.965 ÷ 81.975 (3.2269 ÷ 3.2273) 81.975 ÷ 81.985 (3.2273 ÷ 3.2277)
1st Oversize + 0.25 mm (0.010") A B C	82.205 ÷ 82.215 (3.2364 ÷ 3.2368) 82.215 : 82.225 (3.2368 ÷ 3.2372) 82.225 ÷ 82.235 (3.2372 ÷ 3.2376)
2nd Oversize + 0.50 mm (0.020") A B C	82.455 ÷ 82.465 (3.2462 ÷ 3.2466) 82.465 ÷ 82.475 (3.2466 ÷ 3.2470) 82.475 ÷ 82.485 (3.2470 ÷ 3.2474)
Piston installed clearance in mm (in.)	0.030 ÷ 0.050 (0.0012 ÷ 0.0020)
Max. total wear clearance on piston and cylinder in mm (in.)	max. 0.08 (0.0031)
Installed direction of piston	arrow and word "vorn"face forward

R65

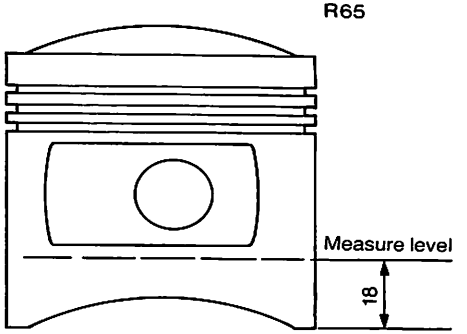

Engine

Specifications

Model	R 65
Piston Rings Plain compression ring (1st groove)[1]) Height in mm (in.)	$1.75^{-0.010}_{-0.022}$ ($0.0700^{-0.0004}_{-0.0009}$)
End clearance in mm (in.)	0.30 . . . 0.50 (0.012 . . . 0.020)
Side clearance in mm (in.)	0.050 . . . 0.082 (0.0020 . . . 0.0032)
Taper face ring (2nd groove)[1]) Height in mm (in.)	$2.00^{-0.010}_{-0.022}$ ($0.0790^{-0.0004}_{-0.0009}$)
End clearance in mm (in.)	0.30 . . . 0.45 (0.012 . . . 0.018)
Side clearance in mm (in.)	0.040 . . . 0.072 (0.0016 . . . 0.0028)
Double bevel ring (3rd groove)[1]) Height in mm (in.)	$4.00^{-0.010}_{-0.022}$ ($0.1575^{-0.0004}_{-0.0009}$)
End clearance in mm (in.)	0.25 . . . 0.40 (0.010 . . . 0.016)
Side clearance	0.030 . . . 0.062 (0.0012 . . . 0.0024)
Installed direction of piston rings	word "top" facing up

[1]) Not acc. to DIN standards,
special version for BMW.

Engine

Specifications

Model	R 65
Piston Pin Piston pin offset from center of piston in mm (in.)	1.5 (0.060)
Piston pin dia. in mm (in.)	$22_{-0.005}$ ($0.86614_{-0.0002}$)
Bore dia. of piston eye in mm (in.)	$22^{+0.010}_{+0.005}$ ($0.86614^{+0.00040}_{+0.0002}$)
Piston pin play[1]) in piston in mm (in.)	0.005 . . . 0.015 (0.00020 . . . 0.00060)
Piston pin clearance in conrod bushing in mm (in.)	0.015 . . . 0.025 (0.0006 . . . 0.0010)

[1]) Only replace pistons and piston pins together.

Engine

Specifications

Model	R 65
Performance	The actual top speed of a broken in motorcycle depends to a great degree on the air resistance from the size, posture and clothing of the rider, the road conditions and weather conditions.

Torque Values in Nm (ft lbs)

Cylinder head nuts (in 3 steps 15 (11) – 25 (18) – 35 (26))	35 + 4 (26 + 2.9)	Oil pan to crankcase	9 . . . 11 (6.5 . . . 8)
Conrod bolts	48 . . . 52 (35 . . . 38)	Valve adjusting screw nut	18 . . . 22 (13 . . . 16)
Flywheel to crankshaft	100 . . . 105 (72 . . . 76)	Adapter for carburetor	12 + 2 (9 + 1.5)

Tighten all other bolts and nuts to common torque values as listed in tables from bolt suppliers or the new BMW Standard 60002.0.

Engine

Specifications 1981 Models

Model	R 65	R 65 LS
Engine design	Four stroke flat engine with V-shaped overhead valves	
Location of engine number	On engine block above oil filler neck	
Cylinder bore dia. in mm (in.)	82 (2.756)	
Piston stroke in mm (in.)	61.5 (2.421)	
Number of cylinders	2	
Cylinder arrangement	Opposite	
Stroke/bore ratio	0.75	
Fiscal displacement in cm^3 ($in.^3$)	645 (39.3)	
Effective displacement in cm^3 ($in.^3$)	649.6 (39.6)	
Compression ratio	9.2 : 1	
Max. output in kW (DIN HP) at rpm	37 (50) 7250	
Max. permissible constant speed in rpm	7300	
Max. permissible top speed in rpm	7650	
Idle speed in rpm	800 . . . 1100	
Max. permissible speed while breaking in motorcycle up to 1000 km/600 miles in rpm up to 2000 km/1200 miles in rpm	4000 4500	
Direction of rotation	Looking at alternator clockwise	
Max. torque in Nm/mkp/ft lbs at rpm	52,3 at 6500	

Engine

Specifications 1981 Models

Model	R 65	R 65 LS
Mean piston speed m/s at rpm	14.8 7250	
Compression in bar (psi) good normal poor	above 10.0 (142) 8.5 . . . 10.0 (121 . . . 142) below 8.5 (121)	
Instructions for checking compression (motorcycle with starter)	1. Unscrew spark plugs. 2. Check compression with a calibrated compression tester, fully charged battery, engine having operating temperature and running at starter speed. Remove equal pressure carburetor prior to testing!	
Fuel	Premium grade	
Fuel consumption in ltr/100 km (mpg) acc. to DIN 70030 at 110 km/h (70 mph)	4.6 (51)	

Testing Report for Crankshaft Main Bearing Play

(also refer to Service Information, Gr. Engine)

Model _____ Chassis No. _____ Mileage _____

Order No. _____ Encl. for GA No. _____

Measuring Main Bearing Journals:

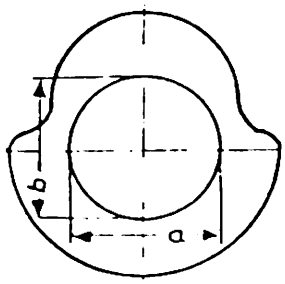

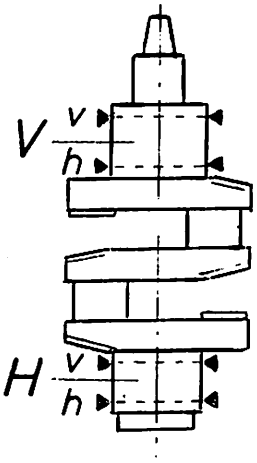

Measure front main bearing journals V and rear main bearing journals H in directions a and b (each 3 times at same position), transmitting to planes Vv, Vh, Hv, Hh, with an external micrometer. This means 24 different values which must be entered in the table below. Figure out mean values as shown below.

Measuring Plane ▶ / ▼		a			b			Cross Addition	: 6 =	Mean Value of Main Bearing Journal
59, . . .	V v								: 6 =	△ 59, . . . mm
	V h								: 6 =	△ 59, . . . mm
	H v								: 6 =	△ 59, . . . mm
	H h								: 6 =	△ 59, . . . mm

Measuring Main bearing Shells:

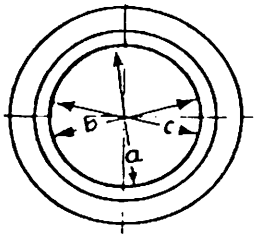

Measure main bearing shells in directions, a, b and c. Make marks on engine block and bearing caps with a soft-tip pen as shown in the illustration. Otherwise proceed as described above. This means 36 different values which must be entered in the table below. Figure out mean values as shown below.

Measuring Plane ▶ / ▼		a			b			c			Cross Addition	: 9 =	Mean Value of Main Bearing Shells
60,0 . . .	V v												
	V h												
	H v												
	H h												

Calculating Main Bearing Play:

Nominal value = 0.020 . . . 0.065 mm

Measurd Values		Bearing Shell Dia.		Crankshaft Bearing Journal Dia.		Bearing Play
V	v		minus		=	mm
	h		minus		=	mm
H	v		minus		=	mm
	h		minus		=	mm

Date _____ Signature of Tester _____

Crankshaft and Bearings

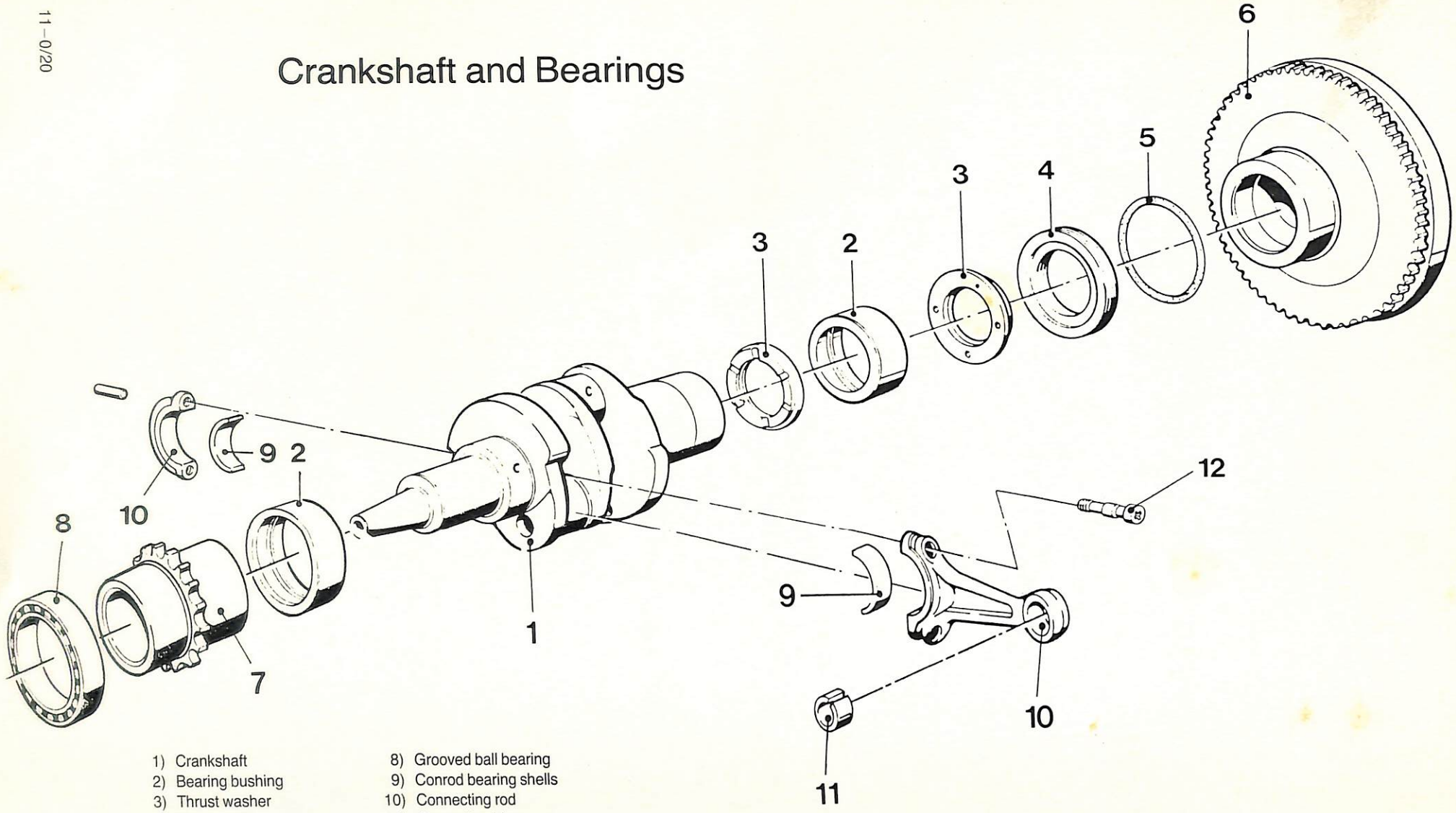

1) Crankshaft
2) Bearing bushing
3) Thrust washer
4) Shaft seal
5) Round cord seal
6) Flywheel
7) Crankshaft sprocket
8) Grooved ball bearing
9) Conrod bearing shells
10) Connecting rod
11) Conrod bushing
12) Conrod bolt

Engine

Specifications 1981 Models

Model	R 65	R 65 LS
Engine Lubrication Lubricating system	Forced oil circulation	
Oil filter	Full flow	
Pressure difference to open bypass valve in bar (psi)	1.5 (21)	
Oil pressure indicator lamp comes on at pressure below bar (psi)	0.2 . . . 0.5 (3 . . . 7)	
Opening pressure of safety valve in bar (psi)	approx. 5.0 (71)	
Oil volume in ltr. (pints) without filter replacement with filter replacement	 2.0 (4.23) 2.25 (4.75)	
Max. oil consumption in ltr./100 km (mpg)	0.1 (2350)	
Oil grade	Brand name HD oil of API classification SE or SF for internal combustion engines. see Group 00, viscosity/temperature diagram.	
Oil Pump Design	Eaton System (hypoid-trochoid spline)	
Delivery rate in ltr. (qts)/h at rpm	1400 (1480) at 6000	
Outer rotor dia. in mm (in.)	57 ± 0.05 (2.280 ± 0.002)	
Housing inside dia. in mm (in.)	$57.2^{+0.046}_{0}$ ($2.2520^{+0.0018}_{0}$)	
Outer rotor/pump housing play in mm (in.)	0.15 . . . 0.29 (0.006 . . . 0.011)	

Specifications 1981 Models

Model	R 65	R 65 LS
Rotor height in mm (in.)	$14^{-0.015}_{-0.045}$ ($0.5512^{-0.0006}_{-0.0018}$)	
Housing depth in mm (in.)	$14^{+0.025}_{+0.010}$ ($0.5512^{+0.0010}_{+0.0004}$)	
Play between mating surface (pump housing) and sealing surface (rotor) in mm (in.)	0.025 . . . 0.070 (0.0010 . . . 0.0027)	
Inner/outer rotor clearance in mm (in.)	0.12 . . . 0.20 (0.005 . . . 0.008)	
Max. scoring depth in cover in mm (in.)	0.5 (0.002)	
Relaxed spring length in mm (in.)	68 (2.677)	
Valve Clearance Adjustment on cold engine (max. 20°C/54°F) Intake valve in mm (in.) Exhaust valve in mm (in.)	0.10 (0.004) (0.15 (0.006) up to 1000 km (600 mile) insp.) 0.20 (0.008) (0.25 (0.010) up to 1000 km (600 mile) insp.)	
Valve timing (tolerance ± 2.5°)	Control shaft device with 2 mm (0.080") valve clearance	
Intake opens before TDC	308° Camshaft 16°	
Intake closes after BDC	44°	
Exhaust opens before BDC	56°	
Exhaust closes after TDC	4°	
Valves Total valve length in mm (in.) Intake Exhaust	100±0.2 (3.937±0.008) 99.3±0.2 (3.909±0.008)	
Intake valve head dia. in mm (in.)	38 (1.496)	
Exhaust valve head dia. in mm (in.)	34 (1.338)	
Intake valve stem dia. in mm (in.)	6.96 – 0.015 (0.2784 – 0.0006)	

Camshaft and Timing Chain

1) Camshaft sprocket
2) Hexagon head bolt
3) Snap ring
4) Flange bearing
5) Woodruff key
6) Camshaft
7) Timing chain
8) Lockwasher
9) Chain tensioner
10) Spring
11) Piston
12) Slide rail
13) Hexagon head bolt
14) Snap ring

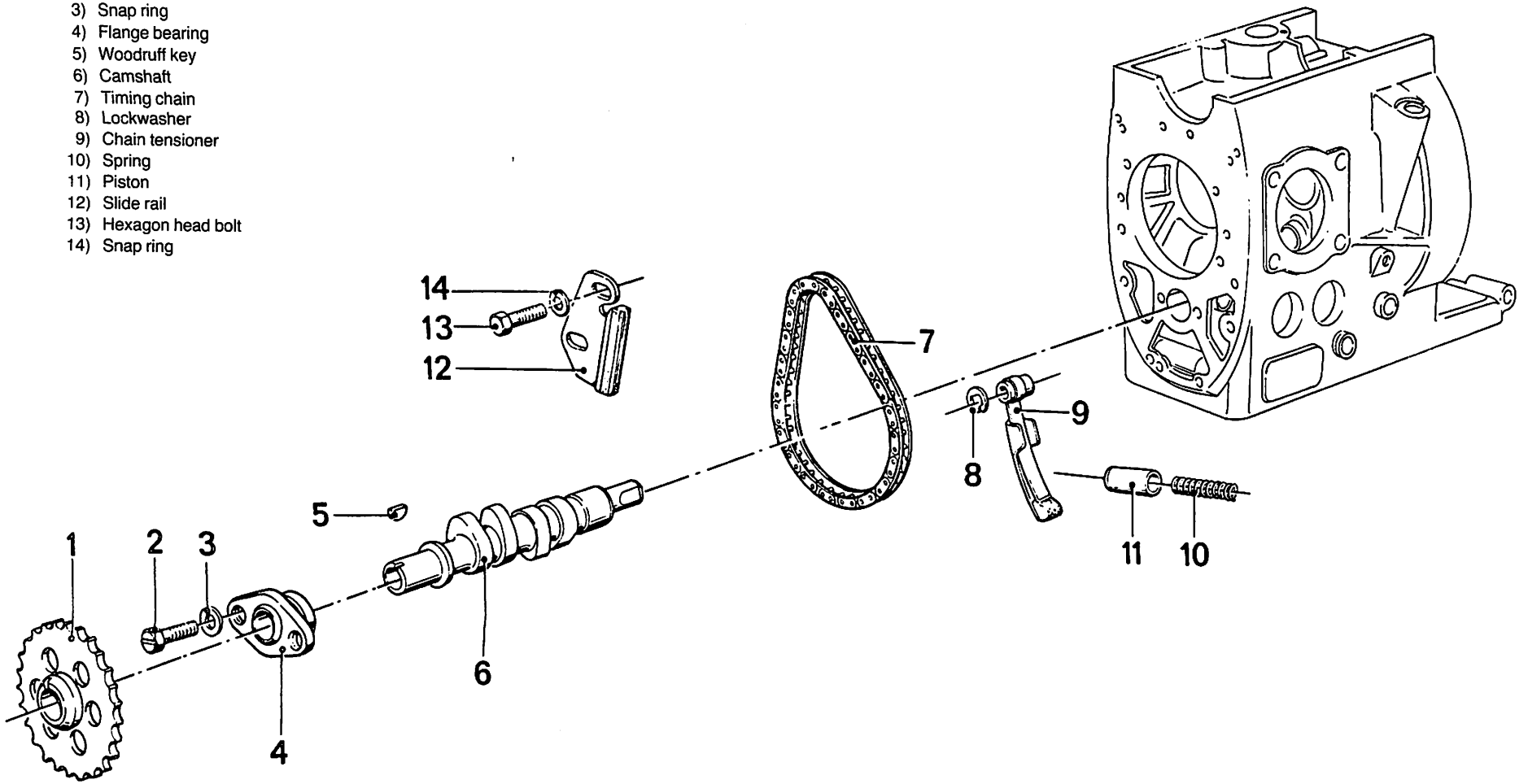

Valve Drive

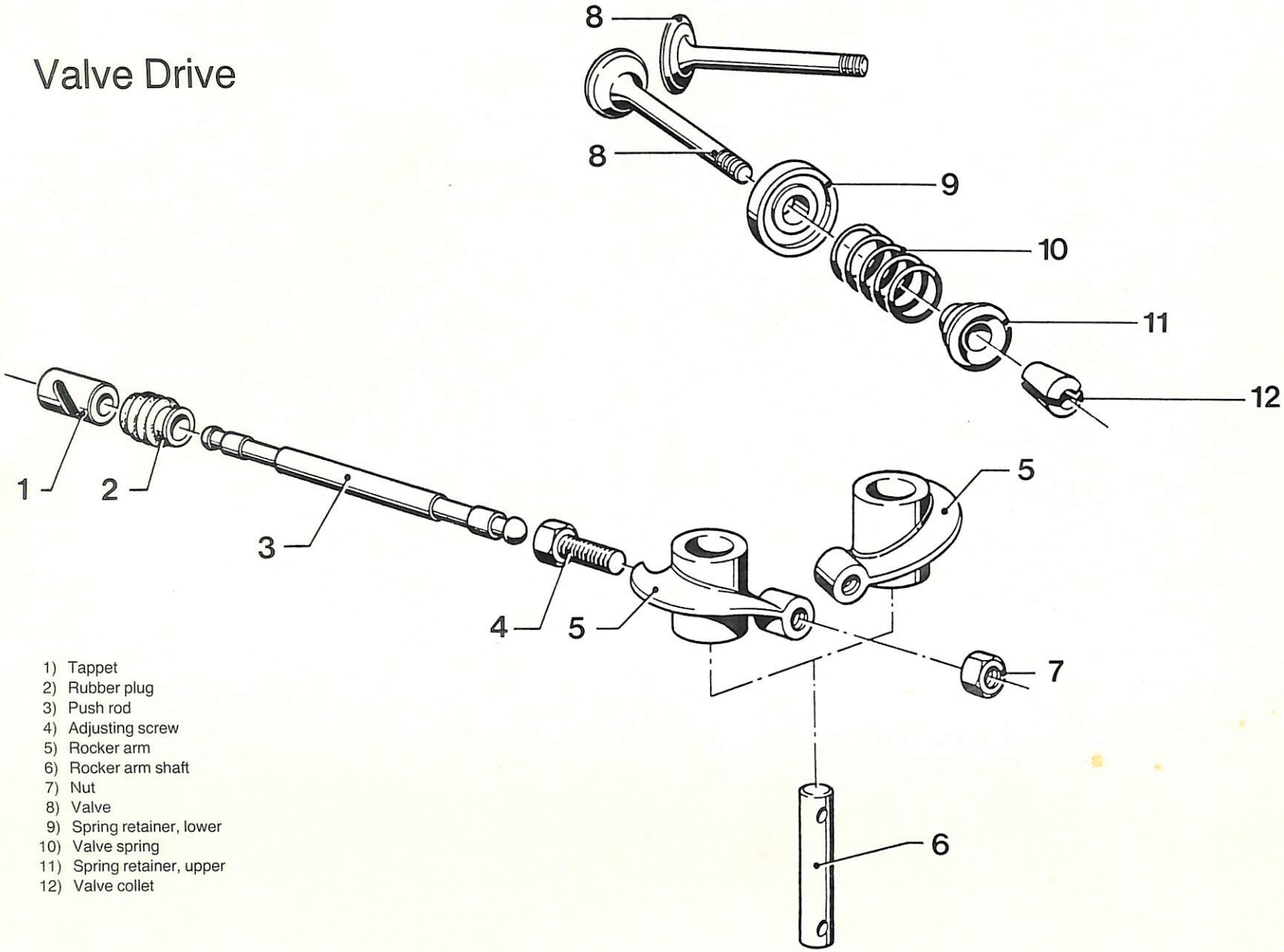

1) Tappet
2) Rubber plug
3) Push rod
4) Adjusting screw
5) Rocker arm
6) Rocker arm shaft
7) Nut
8) Valve
9) Spring retainer, lower
10) Valve spring
11) Spring retainer, upper
12) Valve collet

Specifications 1981 Models

Model	R 65	R 65 LS
Exhaust valve stem dia. in mm (in.)	6.96 − 0.015 (0.2784 − 0.0006)	
Min. valve head edge thickness in mm (in.)		
Intake	$1.0^{+0.5}$ $(0.040^{+0.020})$	
Exhaust	$1.2_{-0.2}$ $(0.047_{-0.008})$	
Max. valve head runout in mm (in.)	0.02 (0.0008)	
Valve Seat Insert		
Intake valve outside dia. in mm (in.)	39.2 h 7 (1.5433)	
Exhaust valve outside dia. in mm (in.)	39.2h7 (1.6433)	
Valve seat insert bore dia. in cylinder head in mm (in.)		
Intake	39 H 7 (1.5354)	
Exhaust	39 H 7 (1.6354)	
Valve seat angle in degrees	90° − 20'	
Valve Seat Width (reference value)		
Intake in mm (in.)	approx. 1.2 + 0.2 (0.048 + 0.008)	
Exhaust in mm (in.)	approx. 1.4 + 0.2 (0.056 + 0.008)	

Engine

Specifications 1981 Models

Model	R 65	R 65 LS
Oversize valve seat inserts in mm (in.)	0.2 (0.008)	
Valve Guide Total length in mm (in.) Intake Exhaust	42 (1.680) 42 (1.680)	
Outside dia. in mm (in.)	14 z 6 (0.5512)	
Inside dia. in mm (in.)	7 H 7 (0.2756)	
Bore dia. in cyl. head in mm (in.)	14 H 7 (0.5512)	
1st oversize dia. in mm (in.)	14.1 z 6 (0.5551)	
2nd oversize dia. in mm (in.)	14.2 z 6 (0.5590)	
Valve Stem Clearance in mm (in.) *Intake*	0.025 . . . 0.055 (0.0010 . . . 0.0022)	
Exhaust	0.04 . . . 0.07 (0.0016 . . . 0.0027)	
Max. wear in mm (in.)	0.1 (0.004) measured at top end of valve guide	
Valve Drive Valve operation	By camshaft via cam followers, push rods and rocker arms	
Camshaft drive	Single roller chain 3/8 x 7/32" with connecting link and chain tensioner with hydr. oil lubrication	
Number of links	50	

Specifications 1981 Models

Model	R 65	R 65 LS
Valve Springs		
Wire gage dia. in mm (in.)	4.25 (0.167)	
Outside coil dia. in mm (in.)	31.9 (1.256)	
Relaxed spring length in mm (in.)	brown code approx. 46 or 43.5 for blue code	
Spring force in kp (lbs) with test length in mm (in.)	29 (64) at 37.6 (1.480)	70 (154) at 28.5 (1.122)
Wound direction	*clockwise*	
Number of active coils	4.6 or 4	
Total number of coils	6	
Compressed length in mm (in.)	25 (0.984)	
Installed direction	Coils marked with paint stripes face cylinder head	
Rocker Arms	With needle bearings	
Axial play of rocker arm	Without play, but easy movement	
Rocker arm ratio	1 : 1.39	

Specifications 1981 Models

Model	R 65	R 65 LS
Camshaft		
Flange bearing bore dia. in engine block in mm (in.)	$40^{+0.039}_{0}$ ($1.5748^{+0.0015}_{0}$)	
Flange bearing outside dia. in mm (in.)	$40^{0}_{-0.016}$ ($1.5748^{0}_{-0.0006}$)	
Flange bearing bore dia. in mm (in.)	$25^{+0.013}_{0}$ ($0.9842^{+0.0005}_{0}$)	
Camshaft bearing journal dia. on alternator end in mm (in.)	$25^{-0.020}_{-0.033}$ ($0.9842^{-0.0008}_{-0.0013}$)	
Camshaft bearing bore dia. in engine block on flywheel end in mm (in.)	$24^{+0.021}_{0}$ ($0.9449^{+0.0008}_{0}$)	
Camshaft bearing journal dia. on flywheel end in mm (in.)	$24^{-0.020}_{-0.033}$ ($0.9449^{-0.0008}_{-0.0013}$)	
Alternator or flywheel end radial play in mm	0.02 . . . 0.046 (0.0008 . . . 0.0018) or 0.02 . . . 0.054 (0.0008 . . . 0.0021)	
Axial play (play between camshaft collar/flange bearing) in mm (in.)	0.1±0.02 (0.0040±0.0008)	
Cam base circle dia. in mm (in.)	28 (1.102)	
Cam lift in mm (in.)	6.756 (0.266)	
Tappet outside dia. in mm (in.)	$22^{-0.025}_{-0.045}$ ($0.8661^{-0.0010}_{-0.0018}$)	
Tappet bore dia. in engine block in mm (in.)	$22^{+0.006}_{-0.015}$ ($0.8661^{+0.0002}_{-0.0006}$)	
Radial play of tappet in mm (in.)	0.01 . . . 0.051 (0.004 . . . 0.0020)	
Max. permissible tappet wear in mm (in.)	0.075 (0.0029)	

Specifications 1981 Models

Model			R 65	R 65 LS
Crankshaft and Bearings			**Main Bearing Journal Dia. in mm (in.)**	
Crankshaft			**Alternator End**	**Flywheel End**
Crankshaft color code		red/red	59.980 . . . 59.990 (2.3614 . . . 2.3618)	59.980 . . . 59.990 (2.3614 . . . 2.3618)
Standard	0	red/blue	59.980 . . . 59.990 (2.3614 . . . 2.3618)	59.971 . . . 59.980 (2.3610 . . . 2.3614)
		blue/red	59.971 . . . 59.980 (2.3610 . . . 2.3614)	59.980 . . . 59.990 (2.3614 . . . 2.3618)
		blue/blue	59.971 . . . 59.980 (2.3610 . . . 2.3614)	59.971 . . . 59.980 (2.3610 . . . 2.3614)
1st Undersize	0.25 (0.010)	red/red	59.730 . . . 59.740 (2.3516 . . . 2.3520)	59.730 . . . 59.740 (2.3516 . . . 2.3520)
		red/blue	59.730 . . . 59.740 (2.3516 . . . 2.3520)	59.721 . . . 59.730 (2.3512 . . . 2.3516)
		blue/red	59.721 . . . 59.730 (2.3512 . . . 2.3516)	59.730 . . . 59.740 (2.3516 . . . 2.3520)
		blue/blue	59.721 . . . 59.730 (2.3512 . . . 2.3516)	59.721 . . . 59.730 (2.3512 . . . 2.3516)
2nd Undersize	0.50 (0.020)	red/red	59.480 . . . 59.490 (2.3417 . . . 2.3421)	59.480 . . . 59.490 (2.3417 . . . 2.3421)
		red/blue	59.480 . . . 59.490 (2.3417 . . . 2.3421)	59.471 . . . 59.480 (2.3414 . . . 2.3417)
		blue/red	59.471 . . . 59.480 (2.3414 . . . 2.3417)	59.480 . . . 59.490 (2.3417 . . . 2.3421)
		blue/blue	59.471 . . . 59.480 (2.3414 . . . 2.3417)	59.471 . . . 59.480 (2.3414 . . . 2.3417)
3rd Undersize	0.75 (0.030)	red/red	59.230 . . . 59.240 (2.3319 . . . 2.3323)	59.230 . . . 59.240 (2.3319 . . . 2.3323)
		red/blue	59.230 . . . 59.240 (2.3319 . . . 2.3323)	59.221 . . . 59.230 (2.3315 . . . 2.3319)
		blue/red	59.221 . . . 59.230 (2.3315 . . . 2.3319)	59.230 . . . 59.240 (2.3319 . . . 2.3323)
		blue/blue	59.221 . . . 59.230 (2.3315 . . . 2.3319)	59.221 . . . 59.230 (2.3315 . . . 2.3319)
Bore for crankshaft main bearing bushing in engine block, dia. in mm			$65^{+0.019}_{0}$ $(2.5590^{+0.0007}_{0})$	
Bore for crankshaft main bearing bushing in bearing cap, dia. in mm			$65^{+0.019}_{0}$ $(2.5590^{+0.0007}_{0})$	
Main bearing journal radial play in mm (in.)			red 0.017 ÷ 0.066 (0.0006 . . . 0.0026	blue 0.019 ± 0.067 (0.0007 . . . 0.0026)
Front crankshaft bearing seat dia. in mm (in.)			$35^{+0.025}_{+0.009}$ $(1.3779^{+0.0010}_{+0.0003})$	
Bearing seat bore dia. in timing case cover in mm (in.)			$62^{-0.009}_{-0,39}$ $(2.4409^{-0.0003}_{-0.0153})$	

Engine

Specifications 1981 Models

Model			R 65	R 65 LS
Main Bearing Bushing Wall thickness in mm (in.) Standard	0	red blue	2.500 . . . 2.510 (0.09842 . . . 0.09882) 2.504 . . . 2.514 (0.10016 . . . 0.10056)	
1st Oversize	0.25 (0.010)	red blue	2.625 . . . 2.635 (0.10334 . . . 0.10374) 2.629 . . . 2.639 (0.10516 . . . 0.10556)	
2nd Oversize	0.50 (0.020)	red blue	2.750 . . . 2.760 (0.10827 . . . 0.10866) 2.754 . . . 2.764 (0.11016 . . . 0.11056)	
3rd Oversize	0.75 (0.030)	red blue	2.875 . . . 2.885 (0.11319 . . . 0.11358) 2.879 . . . 2.889 (0.11516 . . . 0.11556)	
Engine block			dia. A (crankshaft bearing bore) 65 H 6 65.000 . . . 65.019	dia. B (bearing cap bore) $130^{+0.026}_{-0.007}$ 129.993 . . . 130.026
Crankshaft bearing dia. in mm with bearing pressed in			red 60.007 . . . 60.046	blue 59.999 . . . 60.038
Bearing cap			65.000 . . . 65.019	130.003 . . . 130.028

Specifications 1981 Models

Model	R 65	R 65 LS
Crankshaft seat dia. for sprocket in mm (in.)	$35.003^{+0.020}_{+0.009}$ ($1.3781^{+0.0008}_{+0.0003}$)	
Sprocket take-up bore dia. in mm (in.)	$35.003^{+0.003}_{-0.013}$ ($1.3781^{+0.0001}_{-0.0005}$)	
Crankshaft axial play in mm (in.)	0.08 . . . 0.15 (0.0031 . . . 0.0059)	
Thrust washer Red thickness "S" in mm (in.) Blue thickness "S" in mm (in.) Green thickness "S" in mm (in.) Yellow thickness "S" in mm (in.) Max. permissible wear limit in mm (in.).	 2.483 . . . 2.530 (0.0977 . . . 0.0996) 2.530 . . . 2.578 (0.0996 . . . 0.1015) 2.578 . . . 2.626 (0.1015 . . . 0.1034) 2.626 . . . 2.673 (0.1034 . . . 0.1052) 0.20 (0.008)	
Max. runout on shaft journal (alternator end) outside taken up on main bearing journals in mm (in.)	0.02 (0.0008)	
Max. dynamic unbalance of crankshaft (without flywheel) in cmp	20	
Max. lateral runout on flywheel in mm (in.)	0.1 (0.004)	
Connecting Rods and Bearings	Thrust journal dia. in mm (in.)	
Standard 0	$48.00^{-0.009}_{-0.025}$ ($1.8898^{-0.0003}_{-0.0010}$)	
Undersize 1 0.25 (0.010)	$47.75^{-0.009}_{-0.025}$ ($1.8799^{-0.0003}_{-0.0010}$)	
Undersize 2 0.50 (0.020)	$47.50^{-0.009}_{-0.025}$ ($1.8701^{-0.0003}_{-0.0010}$)	
Undersize 3 0.75 (0.030)	$47.25^{-0.009}_{-0.025}$ ($1.8602^{-0.0003}_{-0.0010}$)	
Big end dia. in mm (in.)	$52.00^{+0.015}_{0}$ ($2.0472^{0.0006}_{0}$)	
Conrod bearing radial play in mm (in.)	0.023 . . . 0.069 (0.0009 . . . 0.0027)	
Big end conrod width in mm (in.)	$22.00^{-0.065}_{-0.117}$ ($0.8661^{-0.0025}_{-0.0046}$)	
Thrust journal bearing width in mm (in.)	$22.00^{+0.149}_{+0.065}$ ($0.8661^{+0.0059}_{+0.0025}$)	
Conrod axial play in mm (in.)	0.130 . . . 0.266 (0.0051 . . . 0.0105)	
Max. axial wear limit in mm (in.)	0.32 (0.012)	

Engine

Specifications 1981 Models

Model	R 65	R 65 LS
Distance between big and small end bore center lines in mm (in.)	118 (4.645)	
Small end bore dia. in mm (in.)	$24^{+0.021}_{0}$ ($0.9449^{+0.0008}_{0}$)	
Conrod bushing outside dia. in mm (in.)	24.060 . . . 24.100 (0.9472 . . . 0.9488)	
Piston pin bore dia in conrod bushing in mm (in.)	$22^{+0.020}_{+0.015}$ ($0.8661^{+0.0008}_{+0.0006}$)	
Piston pin bore wear limit dia. in conrod bushing in mm (in.)	$22^{+0.040}_{0}$ ($0.8661^{+0.0016}_{0}$)	
Max. deviation from parallel for conrod bores with bearing shells at distance of 150 mm (5.905") in mm (in.)	0.04 (0.0016)	
Max. displacement of conrod bores at distance of 150 mm (5.905") in mm (in.)	1.5 (0.060)	
Max. difference in weight of both connecting rods in g	± 3	
Cylinders		
Bore dia. Standard A in mm (in.)	81.995 ÷ 82.005 (3.2281 ÷ 3.2285)	
B in mm (in.)	82.005 ÷ 82.015 (3.2285 ÷ 3.2289)	
C in mm (in.)	82.015 ÷ 82.025 (3.2289 ÷ 3.2293)	
Surface finish in μm	1.5	

Specifications 1981 Models

Model	R 65	R 65 LS
Max. cyl. bore ovality in mm (in.)	The toleranced surface must be between two coaxial cylinders, which have a radial distance of 0.005 (0.0002)	
Pistons Piston shape	spherical increasing to oval	
Piston assembly weight classes	+ or − stamped	Only install pistons of one weight class!
Piston dia. in mm (in.) Standard A B C	81.955 ÷ 81.965 (3.2265 ÷ 3.2269) 81.965 ÷ 81.975 (3.2269 ÷ 3.2273) 81.975 ÷ 81.985 (3.2273 ÷ 3.2277)	
Piston installed clearance in mm (in.)	0.030 . . . 0.040) (0.0012 . . . 0.0016)	
Max. total wear clearance on piston and cylinder in mm (in.)	max. 0.08 (0.0031)	
Installed direction of piston	arrow and word "vorn" face forward	

R65

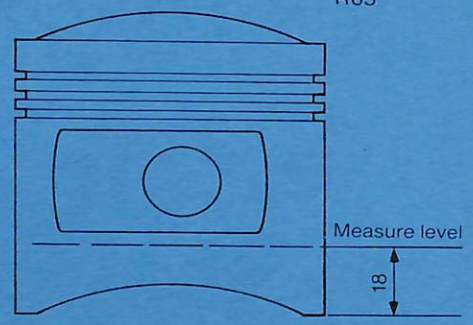

Engine

Specifications 1981 Models

Model	R 65	R 65 LS
Piston Rings Plain compression ring (1st groove)[1]) Height in mm (in.)	$1.75^{-0.010}_{-0.022}$ ($0.0700^{-0.0004}_{-0.0009}$)	
End clearance in mm (in.)	0.30 . . . 0.50 (0.012 . . . 0.020)	
Side clearance in mm (in.)	0.050 . . . 0.082 (0.0020 . . . 0.0032)	
Taper face ring (2nd groove)[1]) Height in mm (in.)	$2.00^{-0.010}_{-0.022}$ ($0.0790^{-0.0004}_{-0.0009}$)	
End clearance in mm (in.)	0.30 . . . 0.45 (0.012 . . . 0.018)	
Side clearance in mm (in.)	0.040 . . . 0.072 (0.0016 . . . 0.0028)	
Double bevel ring (3rd groove)[1]) Height in mm (in.)	$4.00^{-0.010}_{-0.022}$ ($0.1575^{-0.0004}_{-0.0009}$)	
End clearance in mm (in.)	0.25 . . . 0.40 (0.010 . . . 0.016)	
Side clearance	0.030 . . . 0.062 (0.0012 . . . 0.0024)	
Installed direction of piston rings	word "top" facing up	

[1]) Not acc. to DIN standards, special version for BMW.

Specifications 1981 Models

Model	R 65	R 65 LS
Piston Pin Piston pin offset from center of piston in mm (in.)	1.5 (0.060)	
Piston pin dia. in mm (in.)	$22_{-0.005}$ ($0.86614_{-0.0002}$)	
Bore dia. of piston eye in mm (in.)	$22^{+0.010}_{+0.005}$ ($0.86614^{+0.00040}_{+0.0002}$)	
Piston pin play[1]) in piston in mm (in.)	0.005 . . . 0.015 (0.00020 . . . 0.00060)	
Piston pin clearance in conrod bushing in mm (in.)	0.015 . . . 0.025 (0.0006 . . . 0.0010)	

[1]) Only replace pistons and piston pins together.

Engine

Specifications 1981 Models

Model	R 65	R 65 LS
Performance	The actual top speed of a broken in motorcycle depends to a great degree on the air resistance from the size, posture and clothing of the rider, the road conditions and weather conditions.	

Torque Values in Nm (ft lbs)

Cylinder head nuts (in 3 steps 15 (11) – 25 (18) – 35 (26))	35 + 4 (26 + 2.9)	Oil pan to crankcase	30 + 5 (22 + 4)
Conrod bolts	50 ± 2 (36 ± 1)	Valve adjusting screw nut	20 ± 2 (14 ± 1)
Flywheel to crankshaft	100 + 5 (72 . . . + 4)	Adapter for carburetor	50 (36)

Tighten all other bolts and nuts to common torque values as listed in tables from bolt suppliers or the new BMW Standard 60002.0.

Testing Report for Crankshaft Main Bearing Play

(also refer to Service Information, Gr. Engine)

Model _____ Chassis No. _____ Mileage _____

Order No. _____ Encl. for GA No. _____

Measuring Main Bearing Journals:

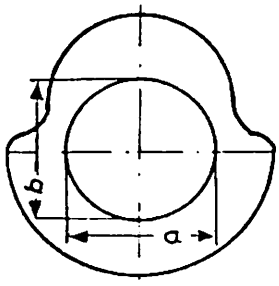

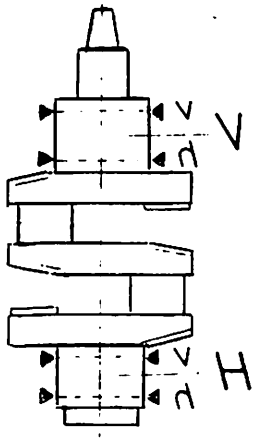

Measure front main bearing journals V and rear main bearing journals H in directions a and b (each 3 times at same position), transmitting to planes Vv, Vh, Hv, Hh, with an external micrometer. This means 24 different values which must be entered in the table below. Figure out mean values as shown below.

Measuring Plane ▶ / ▼		a			b			Cross Addition	: 6 =	Mean Value of Main Bearing Journal
59, . . .	V v								: 6 =	△ 59, . . . mm
	V h								: 6 =	△ 59, . . . mm
	H v								: 6 =	△ 59, . . . mm
	H h								: 6 =	△ 59, . . . mm

Measuring Main bearing Shells:

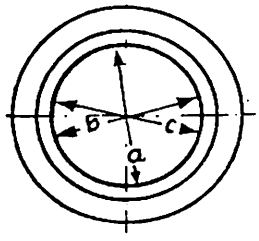

Measure main bearing shells in directions, a, b and c. Make marks on engine block and bearing caps with a soft-tip pen as shown in the illustration. Otherwise proceed as described above. This means 36 different values which must be entered in the table below. Figure out mean values as shown below.

Measuring Plane ▶ / ▼		a			b			c			Cross Addition	: 9 =	Mean Value of Main Bearing Shells
60,0 . . .	V v												
	V h												
	H v												
	H h												

Calculating Main Bearing Play:

Nominal value = 0.020 . . . 0.065 mm

Measurd Values		Bearing Shell Dia.		Crankshaft Bearing Journal Dia.		Bearing Play
V	v		minus		=	mm
	h		minus		=	mm
H	v		minus		=	mm
	h		minus		=	mm

Date _____ Signature of Tester _____

Crankshaft and Bearings

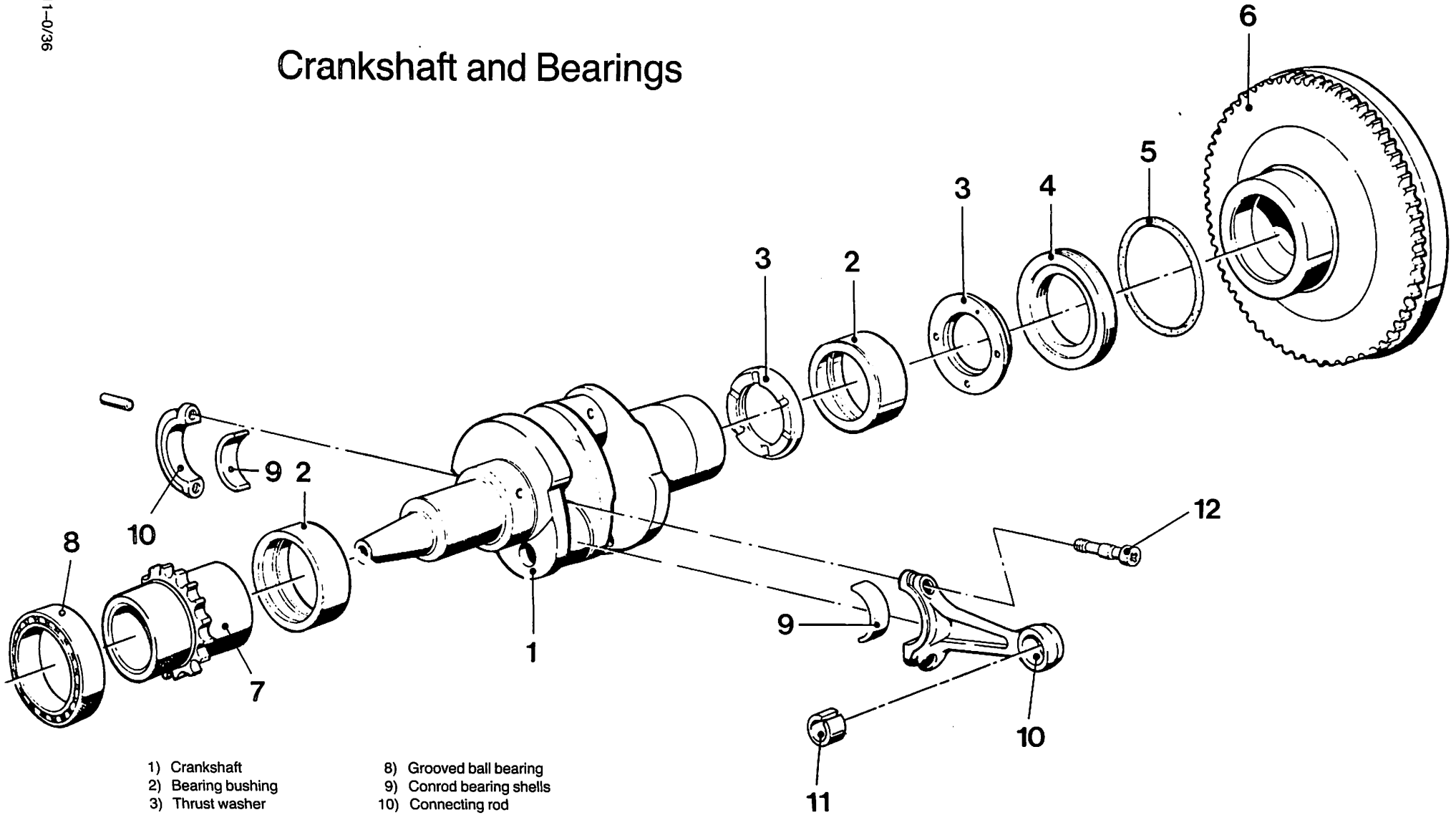

1) Crankshaft
2) Bearing bushing
3) Thrust washer
4) Shaft seal
5) Round cord seal
6) Flywheel
7) Crankshaft sprocket
8) Grooved ball bearing
9) Conrod bearing shells
10) Connecting rod
11) Conrod bushing
12) Conrod bolt

Crankshaft and Bearings (from 1981 Models)

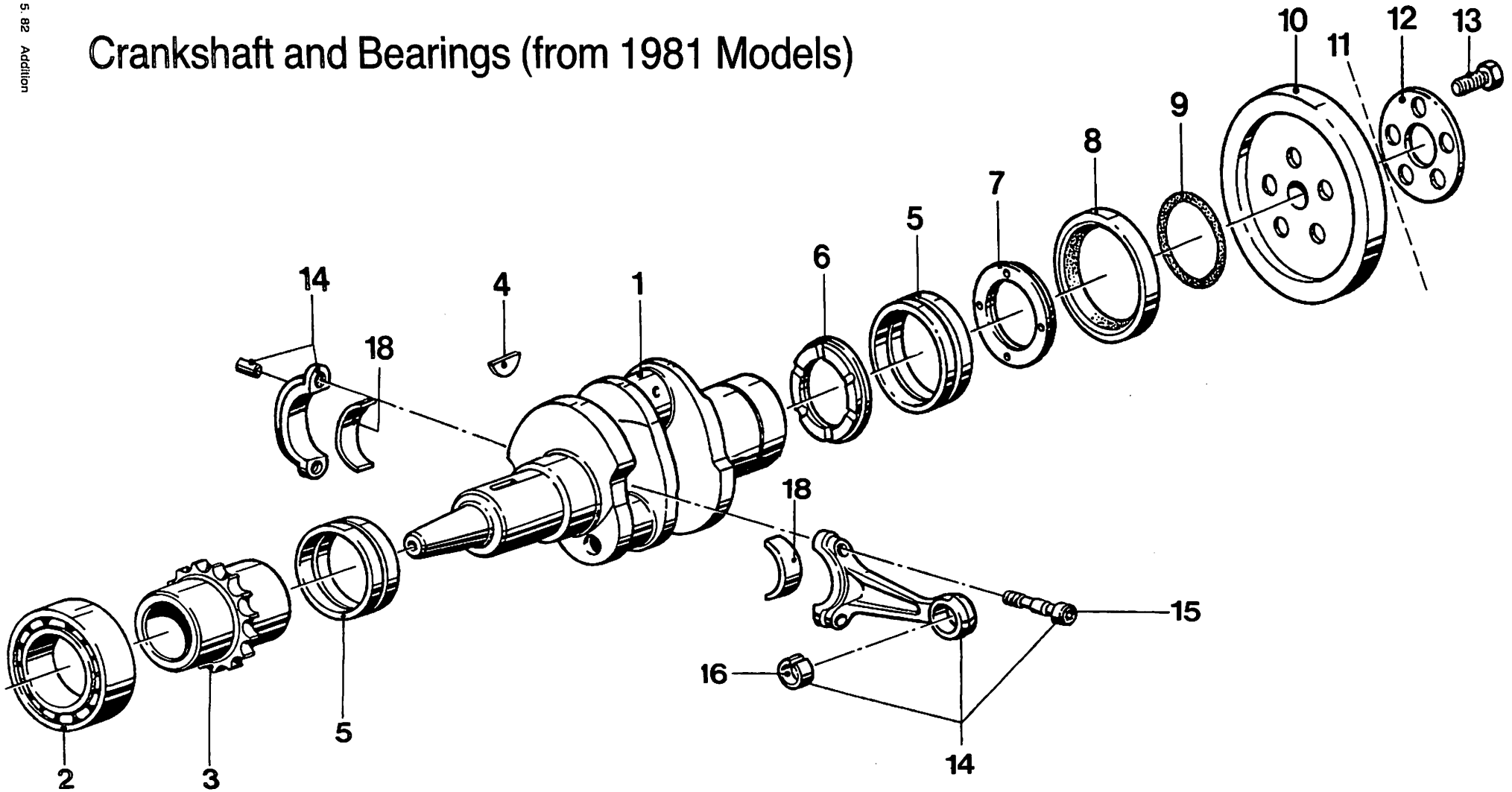

1) Crankshaft
2) Grooved ball bearing
3) Sprocket
4) Woodruff key
5) Main bearing shell
6) Axial bearing (inner)
7) Axial bearing (outer)
8) Shaft seal
9) Seal
10) Thrust ring
11) Clutch housing
12) Start plate
13) Hexagon head bolt
14) Connecting rod
15) Connecting rod bolt
16) Connecting rod bush
17) Dowel pin
18) Connecting rod bearing shell

Oil Filter Installation

Old Version: with paper gasket and steel washer

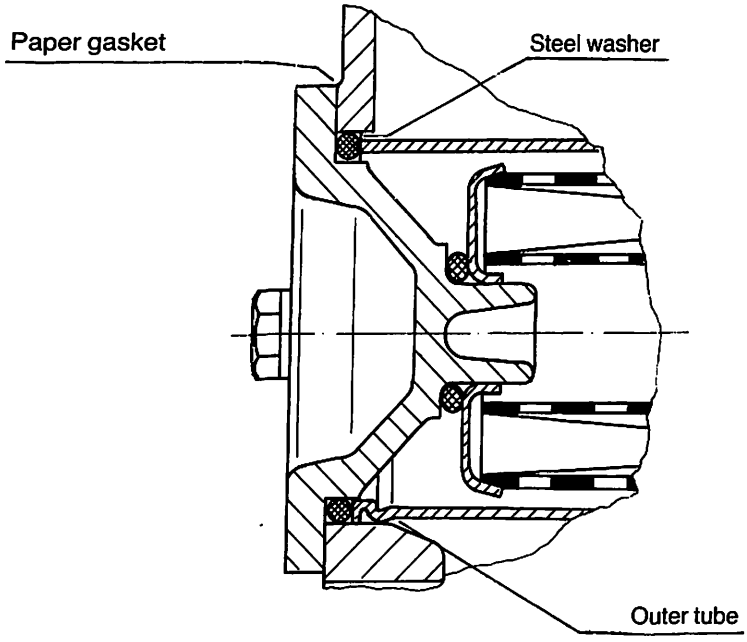

New Version: without paper gasket and steel washer, outer tube cringed

New Oil Filter with cemented straight-edge rings

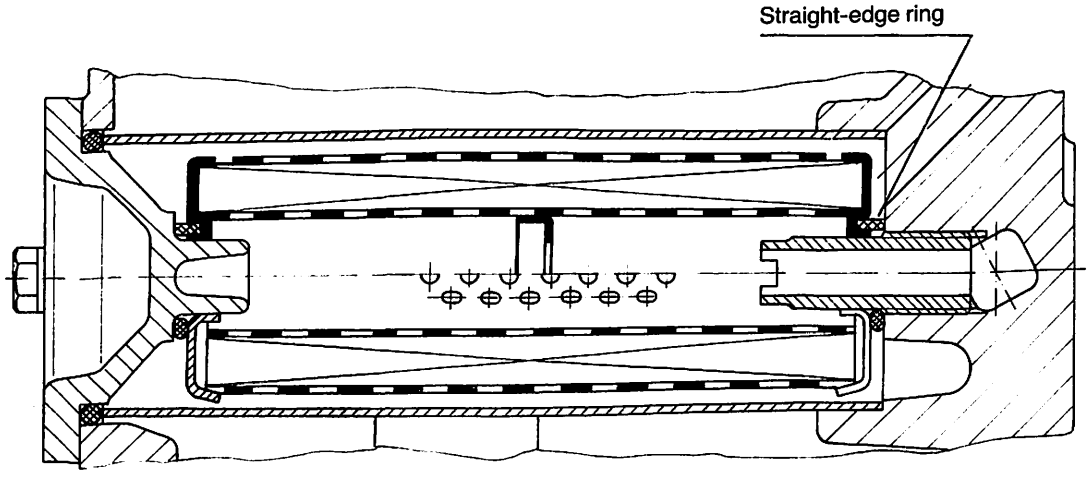

Old Oil Filter without seals

If a new oil filter is installed instead of the old version, remove seals on base of filter chamber and on oil filter cover.

Camshaft and Timing Chain

1) Camshaft sprocket
2) Hexagon head bolt
3) Circlip
4) Flange bearing
5) Woodruff key
6) Camshaft
7) Timing chain
8) Circlip
9) *Chain tensioner*
10) Spring
11) Piston
12) Guide rail
13) Hexagon head bolt
14) Lock washer

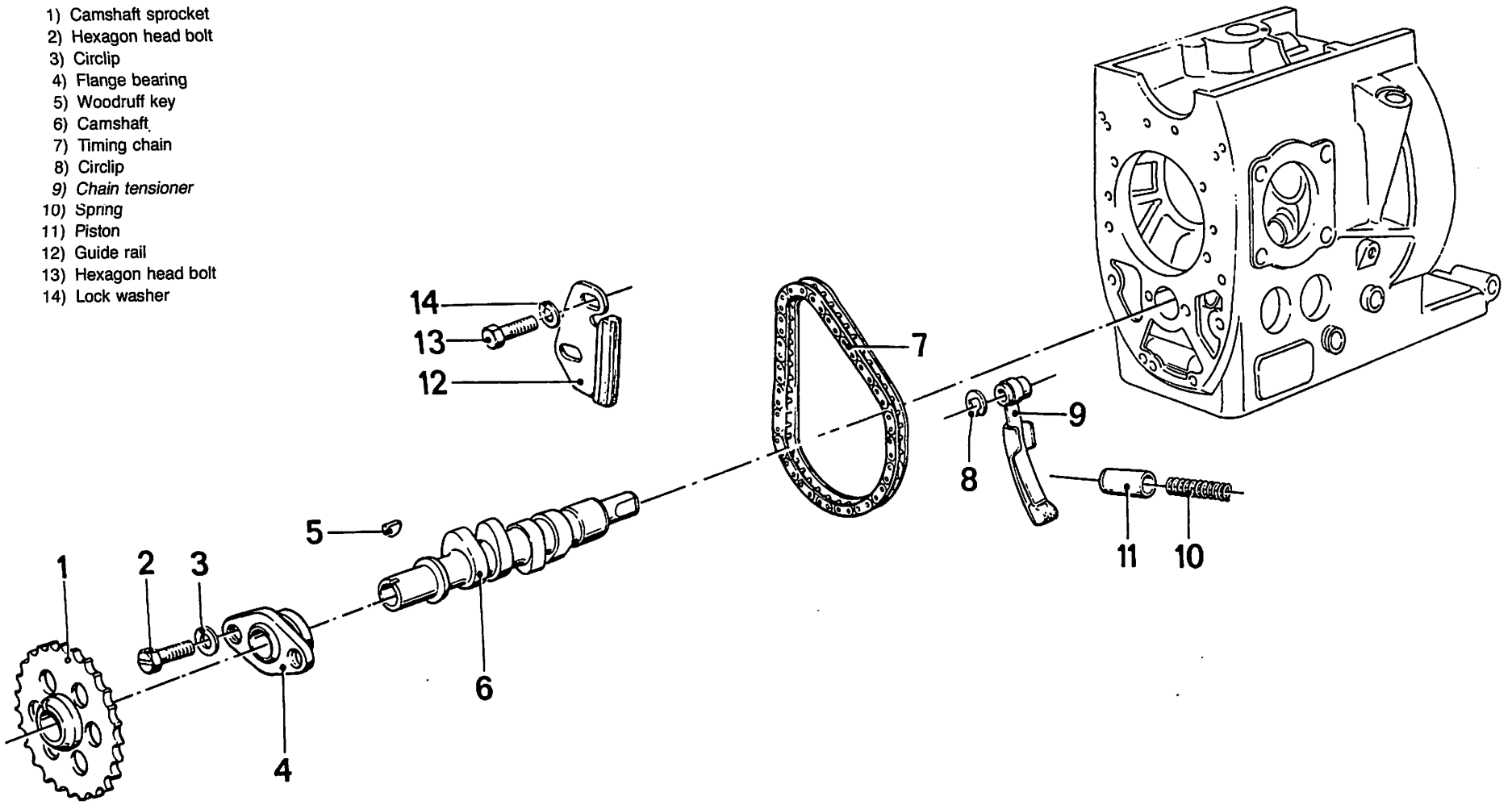

Valve Drive

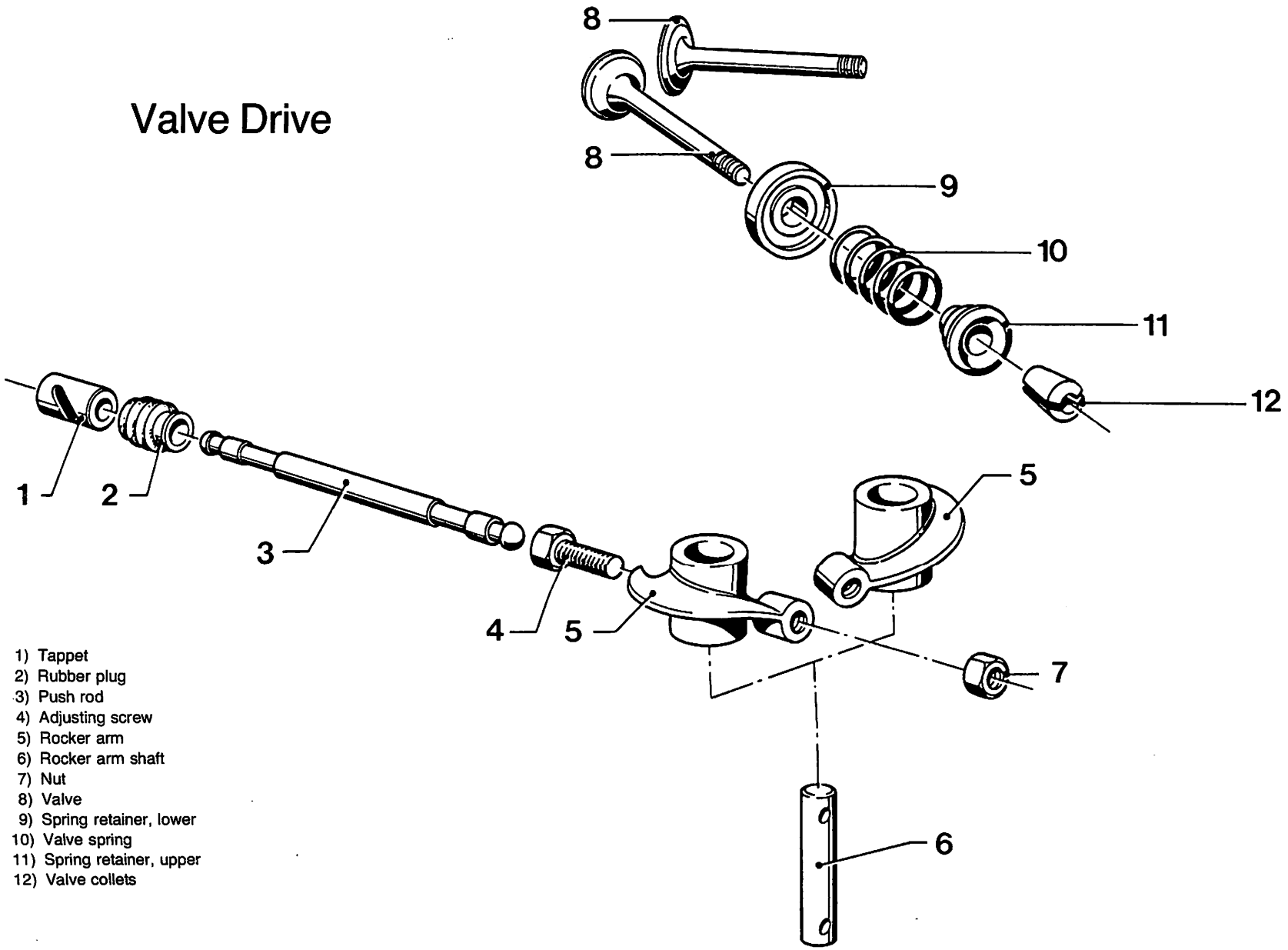

1) Tappet
2) Rubber plug
3) Push rod
4) Adjusting screw
5) Rocker arm
6) Rocker arm shaft
7) Nut
8) Valve
9) Spring retainer, lower
10) Valve spring
11) Spring retainer, upper
12) Valve collets

Bearing clearances:

Main bearing

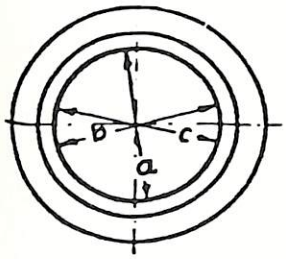

		a			b			c		
F	f									
	r									
R	f									
	r									

Real measure: _____

Main bearing Journal

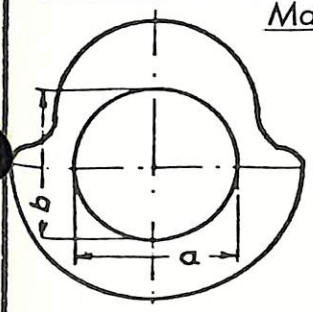

		a			b			Clearance radial			Clearance axial		
F	f												
	r												
R	f												
	r												

Real measure: _____

Connecting rod bearing

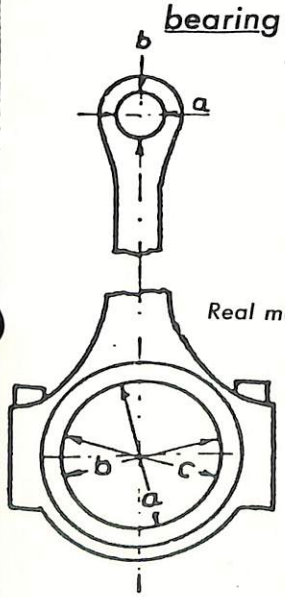

			Piston - pin bushing				Piston pin				Clearance		
Nr	1	a					1	a					
		b						b					
Nr	2	a					2	a					
		b						b					

Real measure: _____

Basic bore dia meter of big end bearing eye

Real measure: ____

		a			b			c		
Nr 1	f									
	r									
Nr 2	f									
	r									

		Connecting rod with bearing									Connecting rod weight
		a			b			c			
Nr 1	f										
	r										
Nr 2	f										
	r										

Real measure: ____

Crank pin

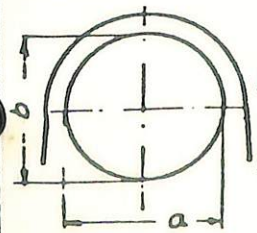

		a			b			Clearance radial			Clearance axial			Clearance Piston pin		
R1	f															
	r															
F2	f															
	r															

Real measure: _____

11 00 039 Checking Compression of All Cylinders

1. Unscrew spark plugs.
   Check compression with a calibrated compression tester and a fully charged battery, engine at operating temperature, throttle twist grip turned to full throttle and at starter speed.

Important Beginning with 1981 Models:
Make sure ignition is interrupted (plug on ignition box – see 12 11 004 – or connection on control unit), since otherwise ignition coil could be destroyed.

248 82 11 010

Test sheet for compression recorder.
See Specifications for compression values.

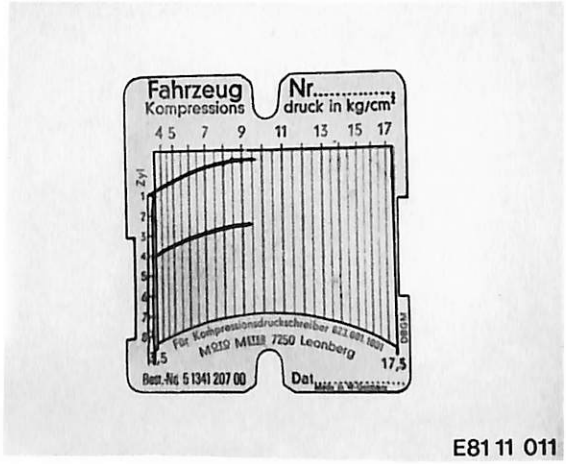

E81 11 011

11 00 050 Removing and Installing Engine

Remove and install exhaust assembly 18 00 020.
Remove and install transmission 23 00 020.
Remove and install fuel tank 16 11 030.
Lower engine.
Disconnect right carburetor on cylinder head and place both carburetors aside above the battery.
Pull off spark plug end caps and place above frame.

248 81 11 122

Pull off multiple-pin plug on control unit.
Disconnect plugs (1) and (2).
Pull off multiple-pin plug on regulator (arrow).

248 81 11 123

Remove starter cover and disconnect battery positive wire on starter (arrow).

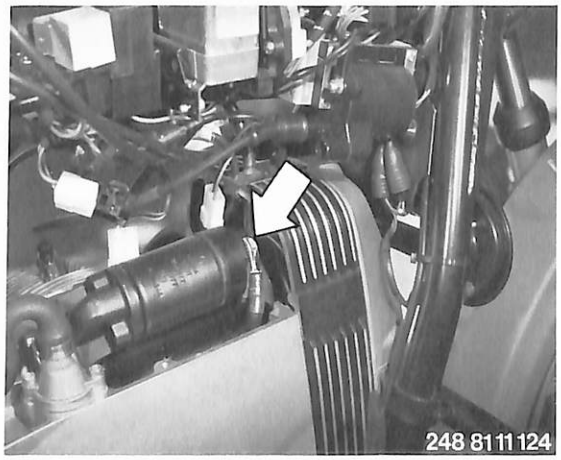
248 81 11 124

Move back engine, lift and incline to the right looking forward.
Finally lift engine out of frame.

247 81 11 125

11 11 050 Removing and Installing Cylinder

Remove and install cylinder head – 11 12 080.
Loosen cylinders with several knocks from a plastic hammer and pull off from housing.

Note!
Be careful that pistons do not knock against engine block when pulling off cylinders!

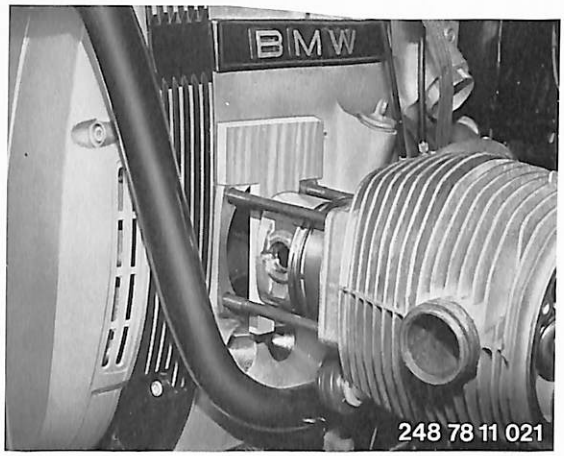

Always replace O-ring on cylinder base (1) and O-rings on upper staybolts (2) each time cylinders are removed.

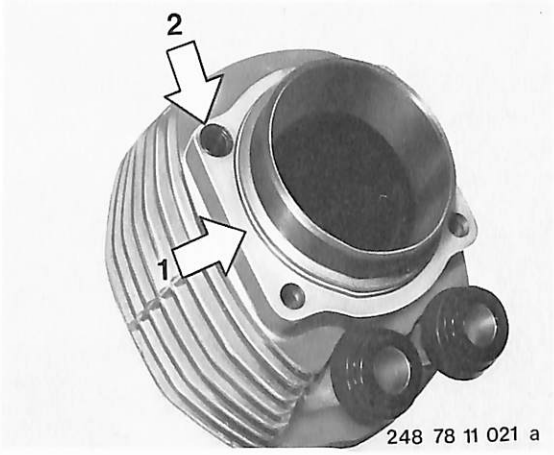

Use piston ring compressor, BMW No. 11 2 910 (R 45) or 11 2 905 (R 65), to guide in pistons.

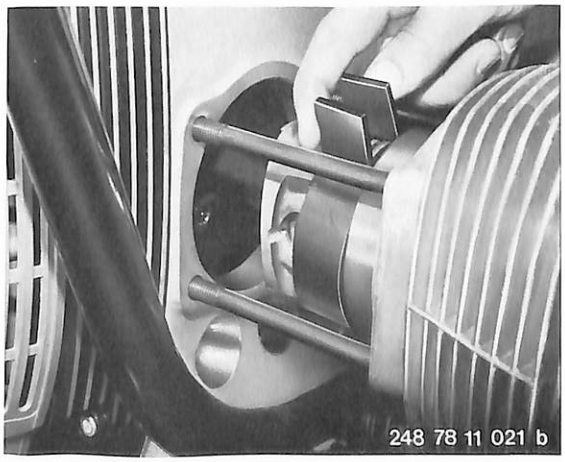

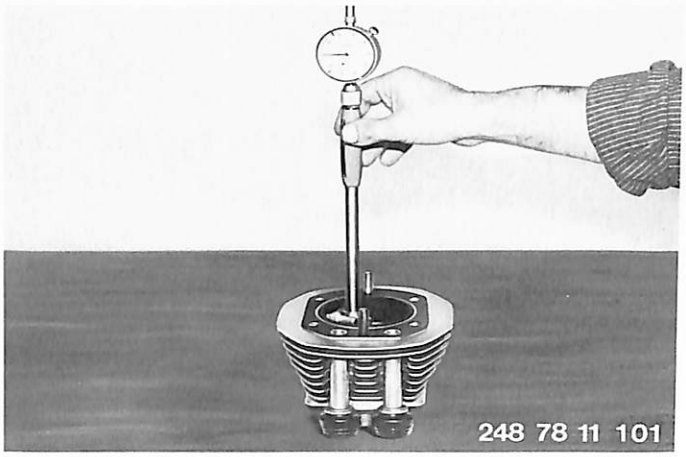

11 11 527 Drilling and Honing Cylinder Bore (no longer possible beginning with 1981 models!)

Remove and install cylinder head – 11 12 080.
Remove and install pistons – 11 25 000.

Only perform those testing and repairing jobs described in the preparatory procedures when actually required.

Cylinders can be ground in two steps.
Refer to specifications for oversizes.

Thermic conditions will not permit grinding to a third oversize.
Measure ground cylinders.
Checkpoint: cylinder base. Select oversize pistons to match ground cylinder size.
Refer to specifications for installed piston clearances.

11 12 080 Removing and Installing Cylinder Head

Engine removed – 11 00 050, or installed.
Take off exhaust system when engine is installed.

Installation Note!
Insert both exhaust manifolds with cross tube into exhaust ports prior to tightening the cylinder heads.

Unscrew cap nut and both nuts (arrows), and take off cylinder head cover and gasket.

Disconnect intake line at cylinder head (only '80 models).

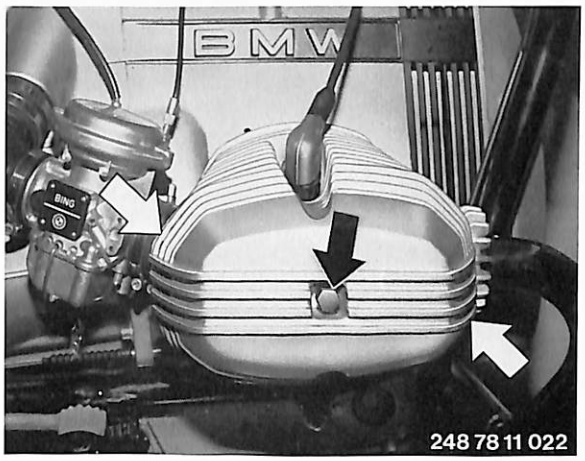

Remove both rocker arms after unscrewing 4 collar nuts from ancher bolts.
Remove push rods.

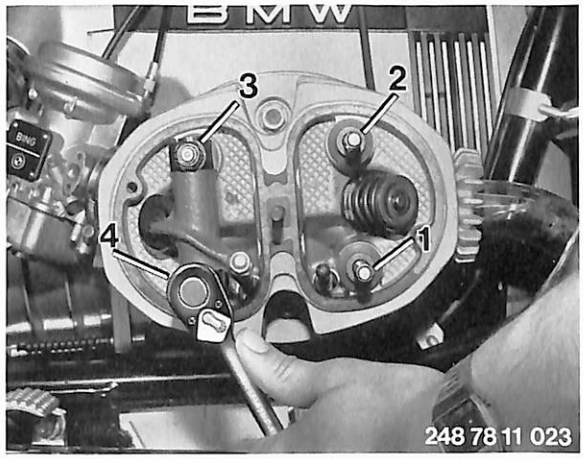

Unscrew two hexagon nuts (arrows).
Loosen cylinder head from cylinders by applying knocks from a plastic hammer and pull off head from anchor bolts.

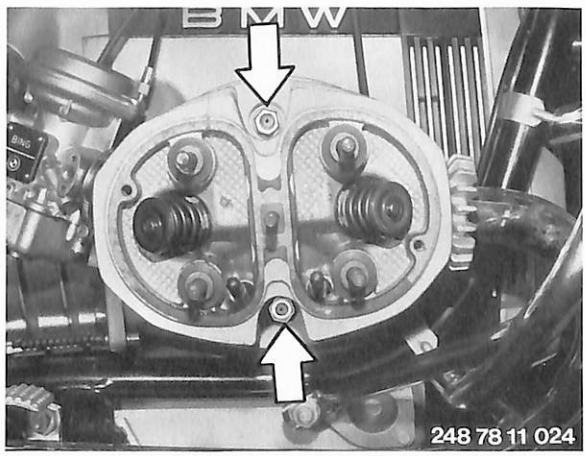

Installation Note for Cylinder Head

Tighten cylinder head mounting nuts of cold engine in three steps referring to sketch for tightening sequence.
Refer to specifications for torque values.

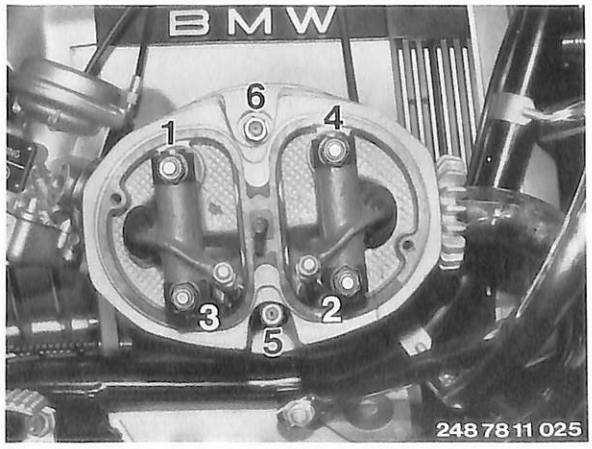

11 12 513 Disassembling and Assembling Cylinder Head/Grinding In Valves

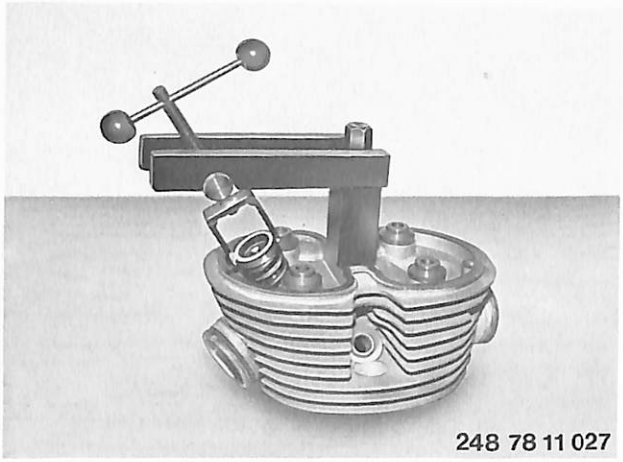

Remove and install cylinder head 11 12 080.

Apply valve spring compressor, BMW No. 11 1 750, compress valve springs, remove valve collets and pull out valve.

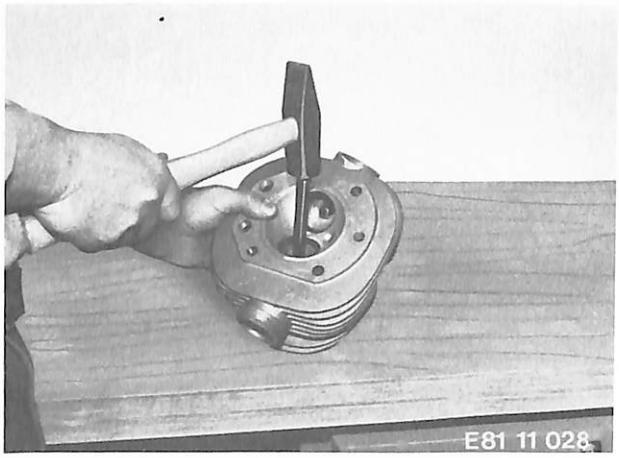

Check cylinder head for

a) cracks and damage on mating surfaces,
b) tightness of valve guides (figure) and valve seat inserts,
c) wear on valve guides,
d) damage on surface of bearing surfaces and ball sockets,
e) radial play of rocker arms,
f) length of valve springs and force of same (see Specifications), and
g) tightness of adapters for carburetor connection. If necessary, install clean threaded inserts with Loctite No. 241.

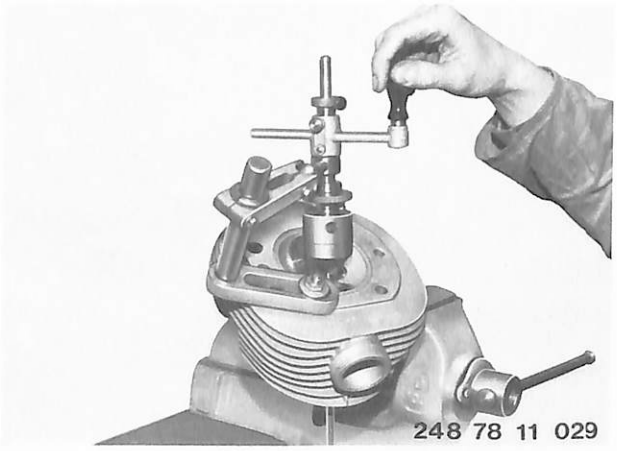

Machining Valve Seats

Machine valve seat inserts in cylinder head with a Hunger valve seat machining tool. Seat angle: 45° + 20', intake valve seat width: 1.5 mm (0.060"); for exhaust valve: 45° angle and 2.0 mm (0.080") width. Chamfer of 15° faces combustion chamber; 75° inclination faces intake or exhaust port. Seal seat should be close to largest valve seat diameter.

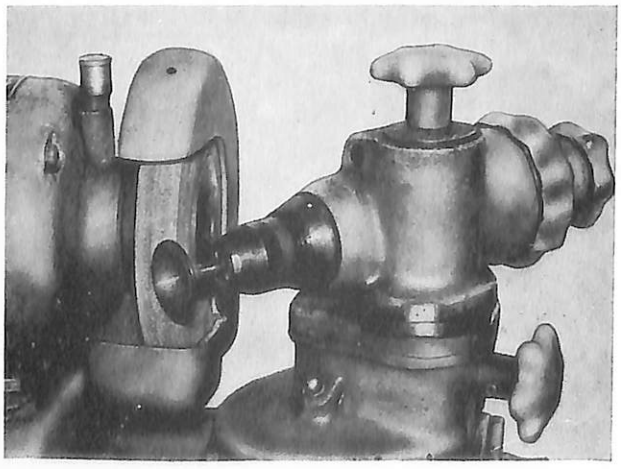

Grind seat on valve to 45° 20' in a grinder. Max. permissible grinding: up to 1 mm (0.040") valve head edge thickness. Ground valve cones and valve seat insert ground with a Hunger tool do not require grinding of the valves, but a leak test (gasoline poured into valve chambers) has to be made after installation of valves.

11 12 561 Replacing Valve Guides

Remove and install cylinder head 11 12 080.
Disassemble cylinder head, grind in valves 11 12 513.

Lower old valve guide at top to circlip and knock valve guides out of warm cylinder head (240 . . . 260° C) toward the combustion chamber with Special Tool BMW No. 11 1 760.

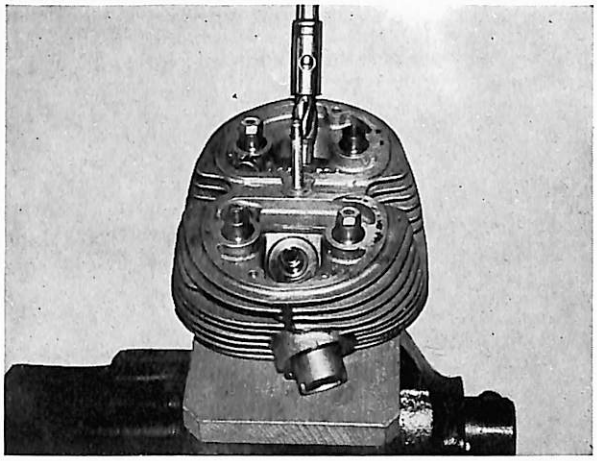

or

Heat cylinder head to 240 . . . 260° C (2 1/2 hours) and knock out valve guide from combustion chamber with Special Tool BMW No. 11 1 760.

Refer to Technical Data for oversize valve guides and standard bores in cylinder head.

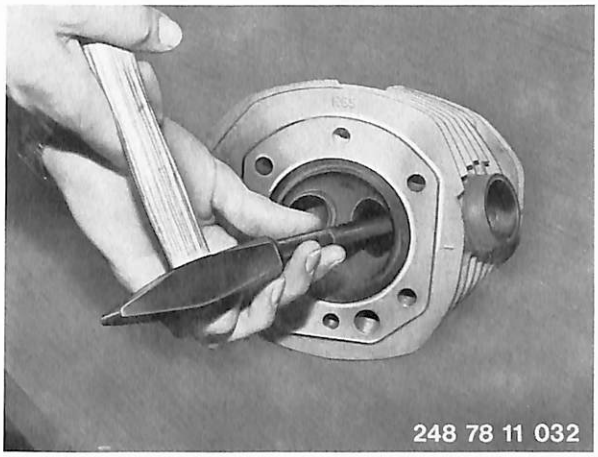

Knock new valve guides (see Technical Data) into warm (250° C) cylinder head with Special Tool BMW No. 11 1 770. Cylinder head should be placed on its side to prevent valve guides from sliding in too far.
Ream out cold valve guide with a fixed valve guide reamer 7H7.

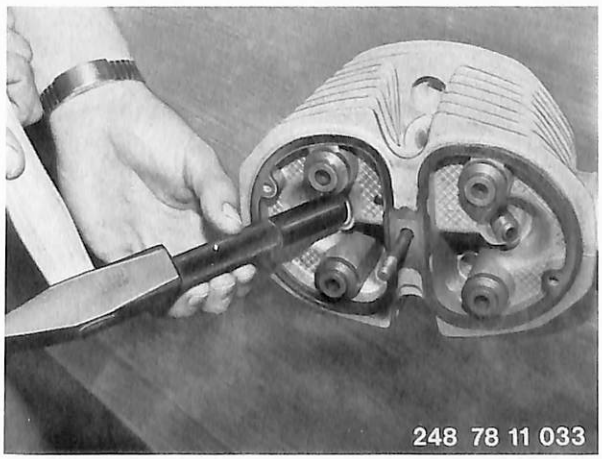

11 12 621 Replacing One Valve Seat Insert

Cylinder head removed – 11 12 080.

Disassemble cylinder head, grind valves – 11 12 513.

If frequent machinging of the valve seats makes it necessary to replace the valve seat inserts, remove (grind) valve seat insert with Hunger tool without damaging the basic bore in cylinder head. Heat cylinder head to 240 . . . 260° C (465 . . . 500° F) and install new valve seat insert (see Specifications).

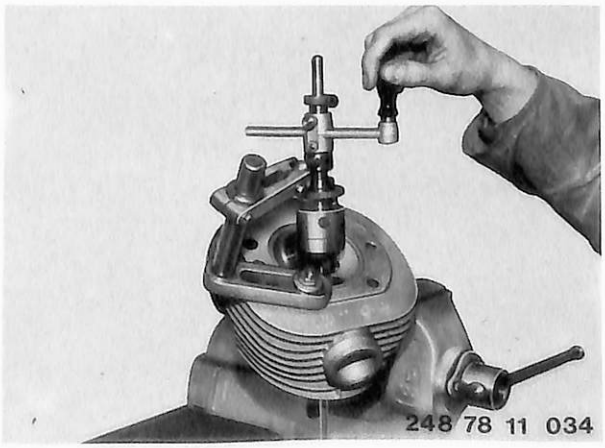

11 12 513 Disassembling and Assembling Cylinder Head and Grinding Valves

Remove and install cylinder head – 11 12 080.

Mount cylinder head on fixture, BMW No. 11 1 750, which is clamped in a vise. Compress valve springs with valve lifter of this fixture and remove set of cotters from spring retainer with a magnet or scribe. Place both spring retainers and valve springs aside. Remove cylinder head from fixture and pull out valves.

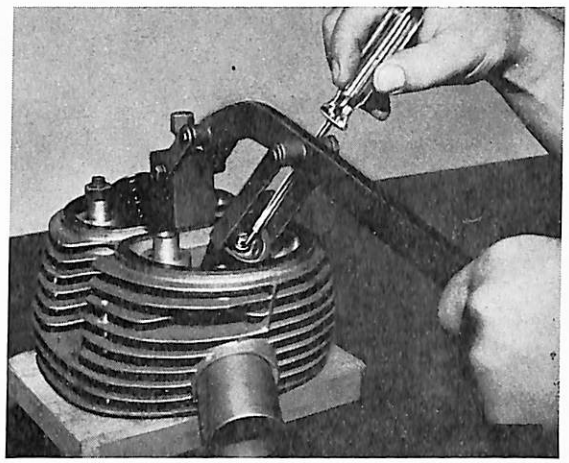

Check cylinder head for

a) cracks and damage on mating surfaces,
b) tightness of valve guides (figure) and valve seat inserts,
c) wear on valve guides,
d) damage on surface of bearing surfaces and ball sockets,
e) radial play of rocker arms,
f) length of valve springs and force of same (see Specifications), and
g) tightness of adapters for carburetor connection. If necessary, install clean threaded inserts with Loctite No. 241.

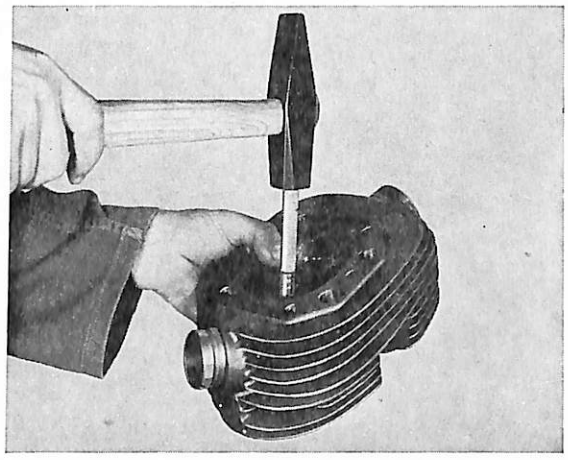

Machining Valve Seats

Machine valve seat inserts in cylinder head with a Hunger valve seat machining tool. Seat angle: 45° + 20', intake valve seat width: 1.5 mm (0.060"); for exhaust valve: 45° angle and 2.0 mm (0.080") width. Chamfer of 15° faces combustion chamber; 75° inclination faces intake or exhaust port. Seal seat should be close to largest valve seat diameter.

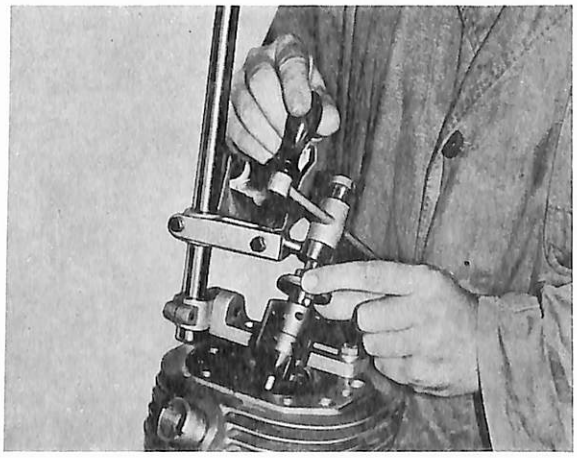

Grind seat on valve to 45° 20' in a grinder. Max. permissible grinding: up to 1 mm (0.040") valve head edge thickness. Ground valve cones and valve seat insert ground with a Hunger tool do not require grinding of the valves, but a leak test (gasoline poured into valve chambers) has to be made after installation of valves.

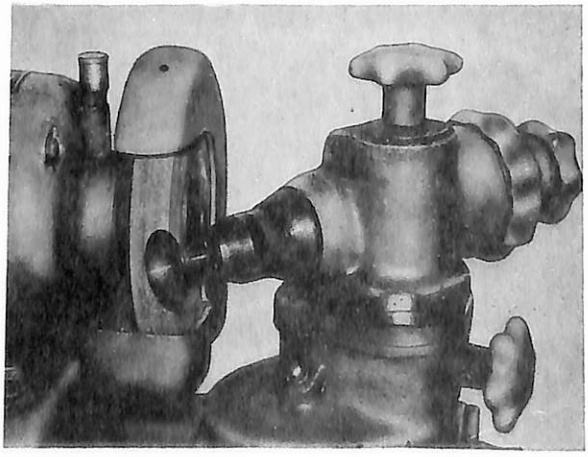

11 14 060 Removing and Installing Timing Case Cover

Engine removed (11 00 050) or installed.
Remove and install alternator – 12 31 020.
Remove and install spark trigger – 12 11 060.
Unscrew nine socket head screws and three hexagon nuts.

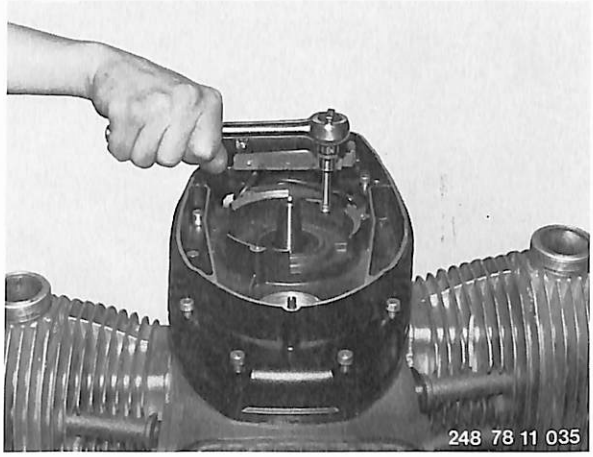

Mount puller, BMW No. 11 1 800, at tapped holes for alternator housing with three (M 5) socket head screws. Install pressure pad for puller and pull off cover.

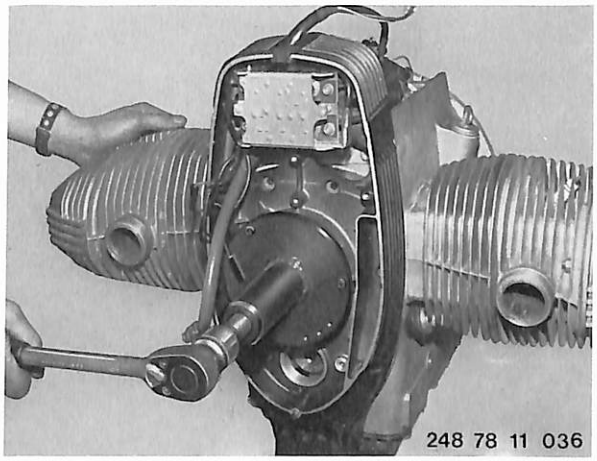

Attaching Timing Case Cover

Heat cover at seat of ball bearing to approx. 80° C (175° F) and position on engine.
Tighten socket head screws and nuts, starting from the center. Settle grooved ball bearing by applying several knocks from plastic hammer against bearing seat.

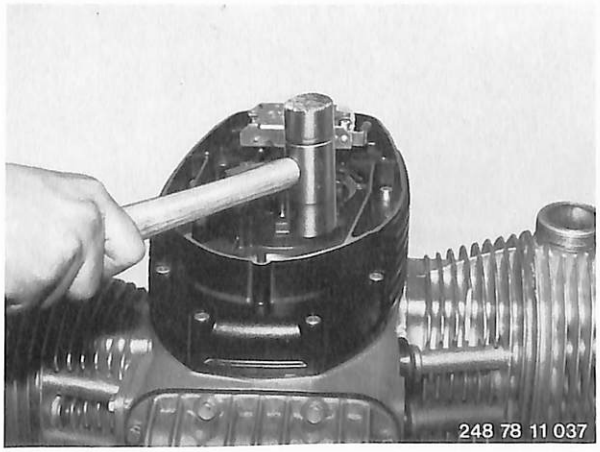

11 14 651 Replacing Radial Oil Seal for Crankshaft

Remove and install timing case cover – 11 14 060.

Knock in shaft seal for alternator with a mandrel, BMW No. 11 1 850.

11 14 151 Replacing Radial Oil Seal for Crankshaft (Transmission End)

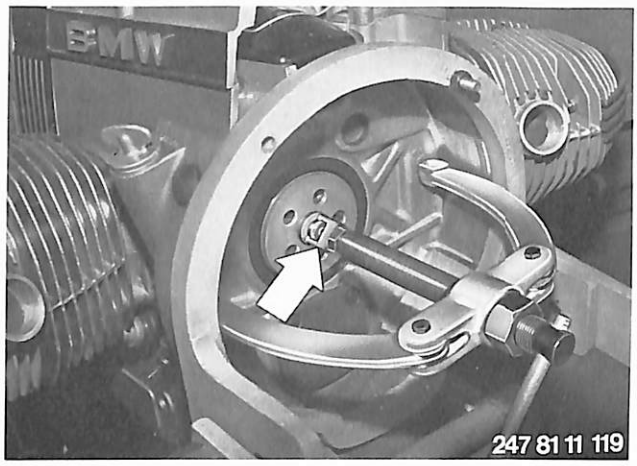

Pulling Out Seal:
Remove and install flywheel or clutch housing 11 22 000.

Bearing race must be pulled off of crankshaft beginning with "1981 models" prior to pulling out shaft seal.
Apply puller, BMW No. 11 1 870 (arrow) from side and pull out bearing race in conjunction with support, BMW No. 00 8 550.

■

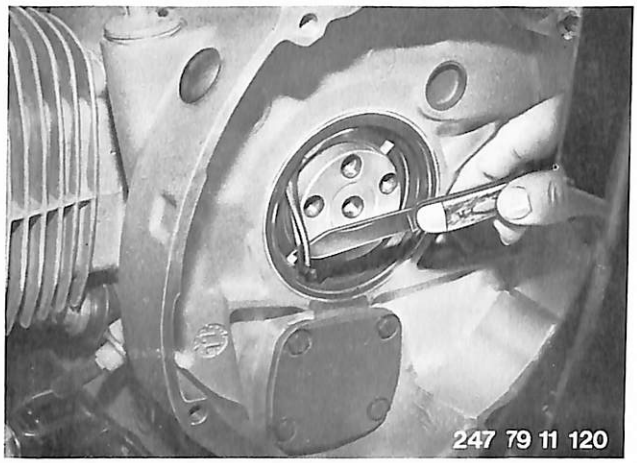

Make approx. 5 cm long cut in lip of seal at bottom left.

■

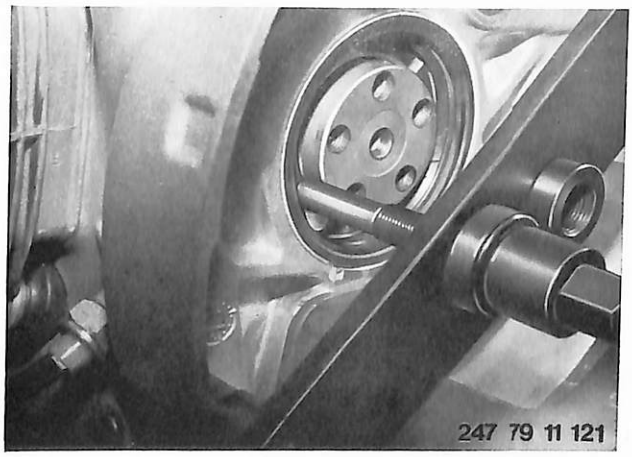

Mount beam of puller, BMW No. 11 1 890, on engine block (right top and left bottom).
Apply pulling spindle and insert eccentric tab through cut in seal up to stop on thrust ring.
Tab should face down.
Turn nut clockwise, while holding on wrench surface with a wrench, and pull out seal.

■

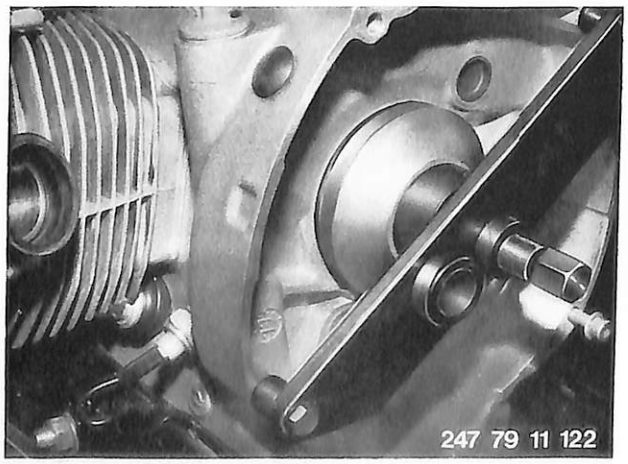

Pressing In Seal:
Mount beam of puller, BMW No. 11 1 890, on engine block (right top and left bottom).
Place seal and pressure pad on impact mandrel, BMW No. 11 1 880.
Apply impact mandrel on engine block, screw spindle forward and press in seal.

■

11 14 651 Replacing Radial Oil Seal for Crankshaft (Alternator End)

Remove and install timing case cover 11 14 060.

Install radial oil seal for front crankshaft journal with impact mandrel, BMW No. 11 1 850.

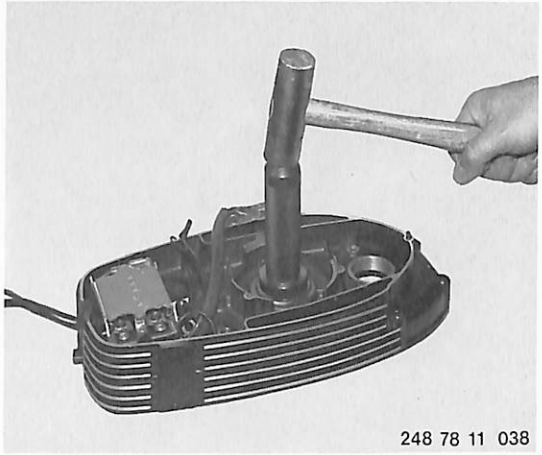

248 78 11 038

11 15 101 Replacing Engine Vent Hose

Remove fuel tank – 16 11 030.
Unscrew starter cover and remove toward right side. Loosen clamp from vent housing with a screwdriver (arrow).

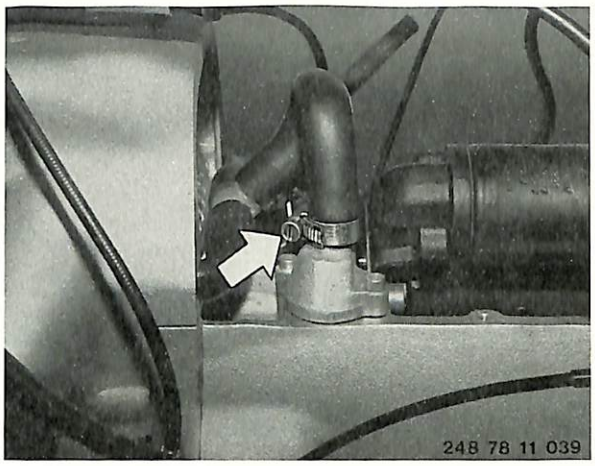

Pull out vent hose from air cleaner housing on left and right, and pull off from vent housing.

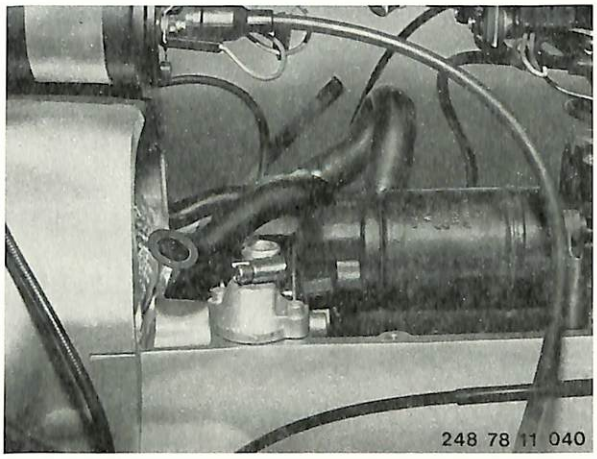

11 15 111 Replacing Check Valve for Engine Vent

Replace engine vent hose – 11 15 101.

Unscrew two socket head screws and take off vent housing.

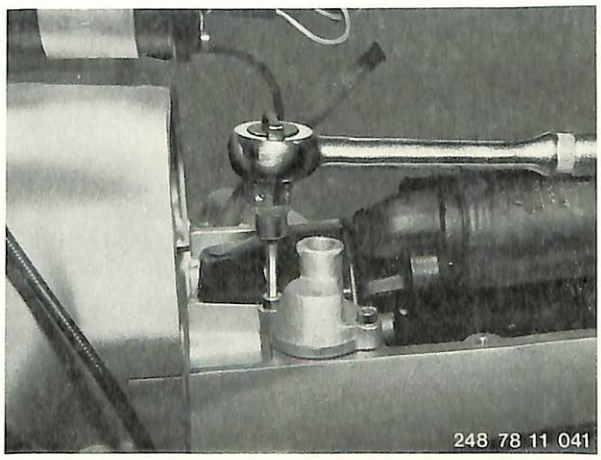

Check Valve (Engine Vent)

1 Circlip
2 Washer
3 Spring
4 Valve disc
5 Groove for spring pre-load (R 45, R 65)
6 Groove
7 Valve

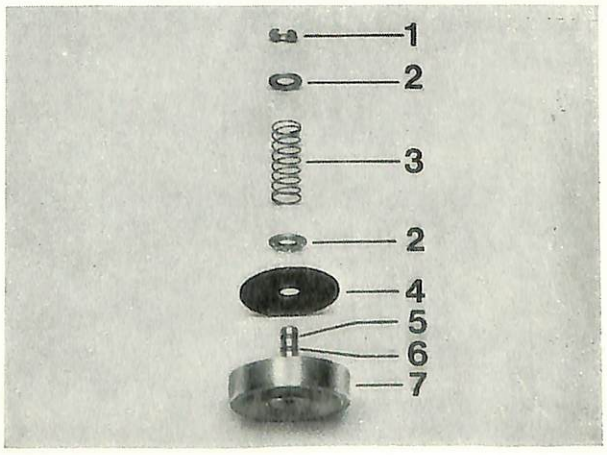

11 15 101 Replacing Engine Vent Hose (1981 Models)

Remove fuel tank 16 11 030.
Remove air cleaner housing upper section.
Pull out filter cartridge 13 72 000.
Unscrew starter cover socket head screws and remove cover.
Unscrew clamp on vent dome (arrow) with a screwdriver and push back vent hose.

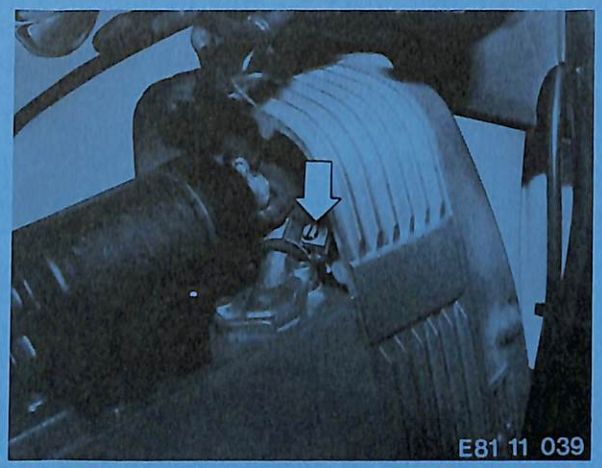

Pull T-adapter for crankcase vent out of air cleaner housing in direction of arrow.
Press vent hose out of air cleaner housing.

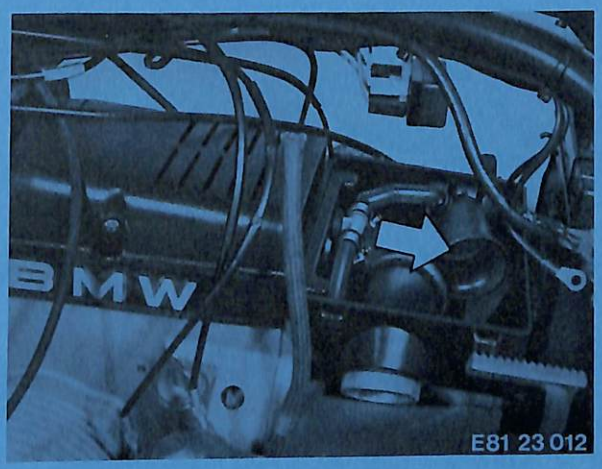

11 21 001 Removing and Installing Crankshaft

Remove and install timing case cover 11 14 060.
Remove and install sprockets 11 13 061.
Remove and install pistons 11 25 000.
Remove and install connecting rods 11 24 000.
Remove and install flywheel or clutch housing 11 22 000.
Unscrew mounting nuts on bearing cap.

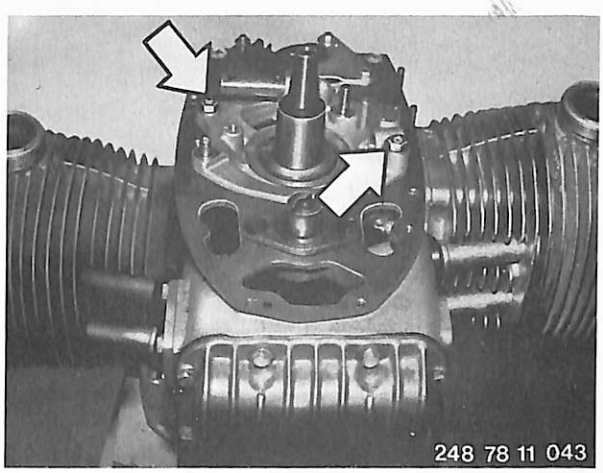

Position engine upright. Screw two screws frcm puller, BMW No. 00 7 500, in tapped holes of main bearing cap provided for this purpose. Install pulling bar parallel to main bearing cap. Don't forget pressure pad for puller. Pull off main bearing cap.

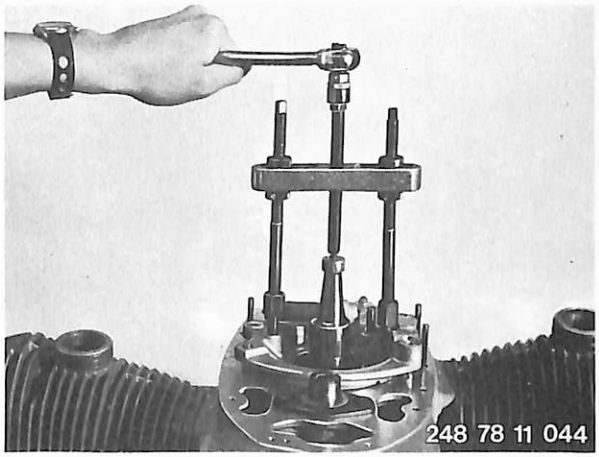

Pull out crankshaft from engine block.

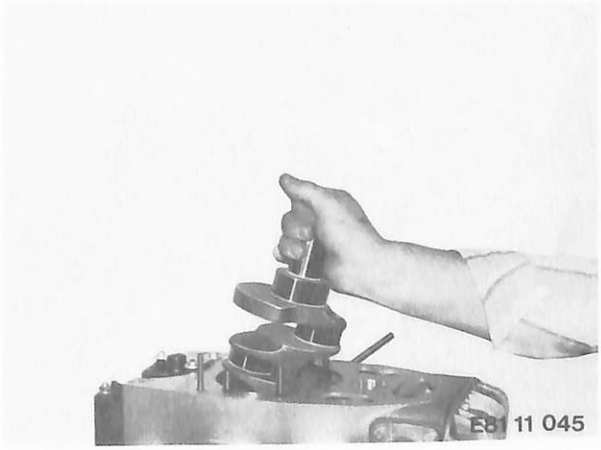

Lift both thrust washers off a locating pins with a screwdriver.

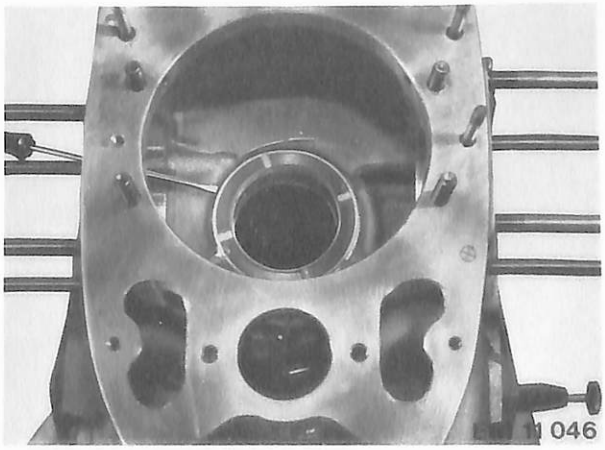

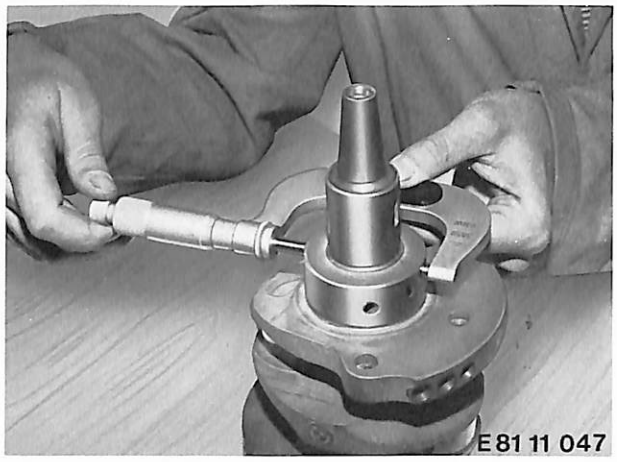

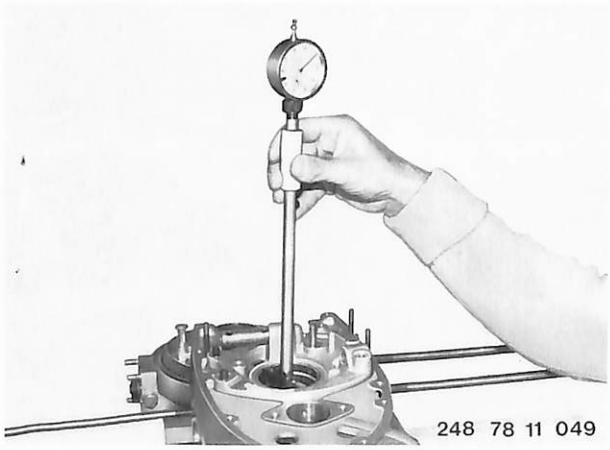

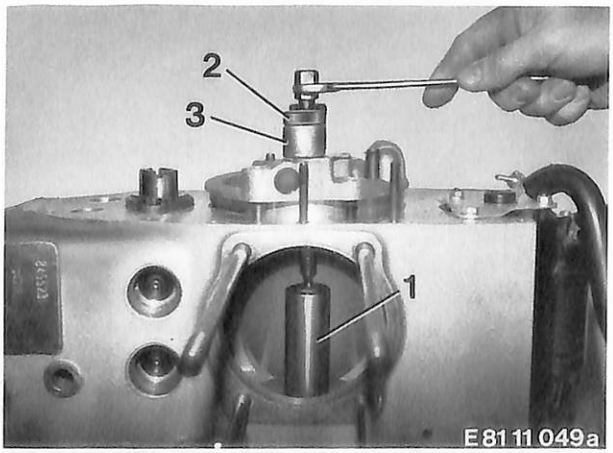

Measuring Crankshaft and Bearing Sleeve

Measure crankshaft thrust bearing journal with a micrometer crosswise in two planes.

Front plane.

■

Rear plane

■

Measure front crankshaft bearing only with installed bearing cap.

Note:
Heat engine block to 100 ... 120° C before installing bearing cap. Let engine block cool down before measuring.

Important!
Main bearing play must be determined exclusively with help of the "Test Report for Crankshaft Main Bearing Play" – see Specifications!

■

To press off the bearing cap (without crankshaft), place main bearing mandrel, BMW No. 11 2 720, (1) in the rear bearing. Press off bearing cap with nipple, BMW No. 11 1 710, (2) and pressing off bridge with spindle from Kukko 17 K (3).

■

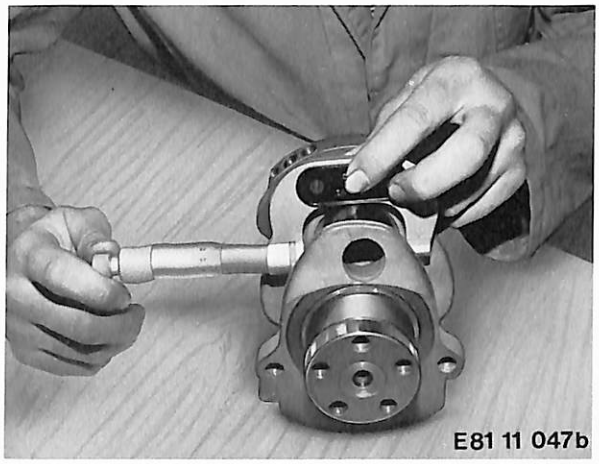

...and connecting rod bearing journals as described for crankshaft and bearing sleeve.
See Specifications for bearing play values.

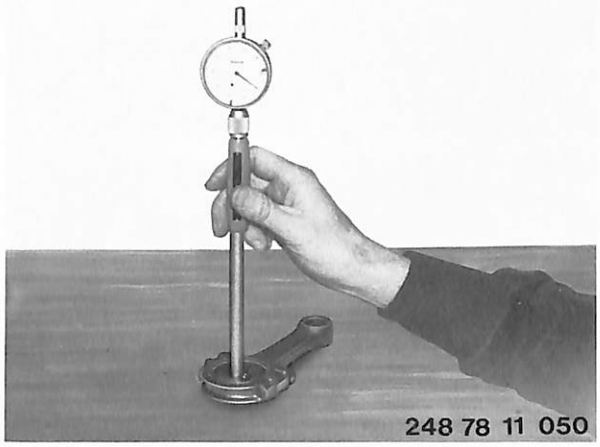

11 21 531 Replacing Main Bearing Bushings

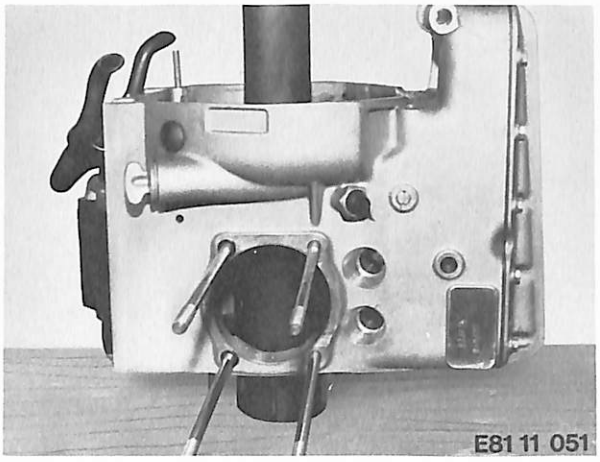

Replace crankshaft 11 21 001.
Pressing Main Bearing Bushing Out of Crankcase:
Heat crankcase to 100 ... 120° C and then place it over cylinder of special tool, BMW No. 11 2 710, in such a manner that locating pins for inner thrust washer engage in holes of cylinder provided for this purpose. Press out bearing bushing in a manual press with mandrel, BMW No. 11 2 700.
When pressing in, use aluminium part, BMW No. 11 2 710, and a piece of pipe to counterhold.

■

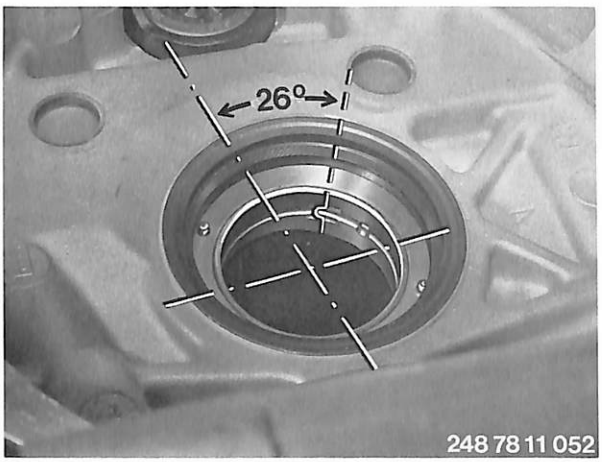

Heat crankcase to 100 ... 120° C. Place aluminium pad from special tool, BMW No. 11 2 710, on removing cylinder. Install crankcase over fixture in such a manner that both locating pins engage in holes provided in aluminium pad. Install new bearing bushing that bearing bushing gap is located at top right as seen at clutch housing end and oil bores of bearing bushing are positioned flush with bore in housing at bottom left.

■

Install mandrel with plastic sleeve from special tool, BMW No. 11 2 710, in bearing bushing. Make sure that locating pins protruding from crankcase extend into openings at periphery of mandrel after pressing in the bearing bushing. The bearing bushing is sized that it will be positioned back in the bearing bore of crankcase on both sides slightly.

■

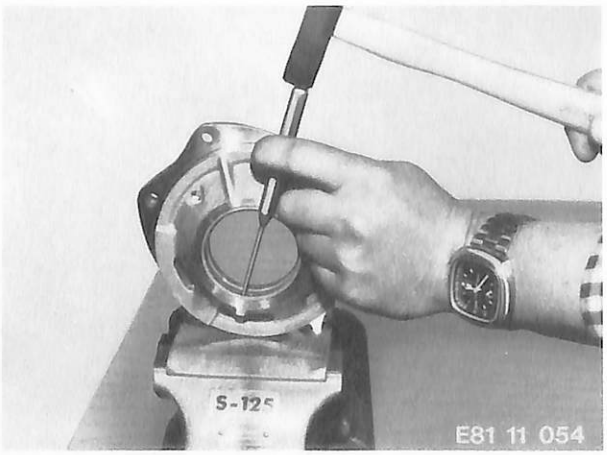

Replacing Main Bearing Bushing in Main Bearing Cap:
Knock out locating pin for bearing bushing from inside to outside. Heat bearing cap to 100 ... 120° C and position on cylinder of special tool, BMW No. 11 2 710. Press out bearing bushing in a manual press with mandrel, BMW No. 11 2 700.

■

Press new bearing bushing into bearing cap heated to 100 ... 120° C, that bearing bushing gap is located top left as seen on installed bearing cap and oil bores are positioned vertical. Offset bearing bushing gap from vertical by approx. 26° (see arrows).

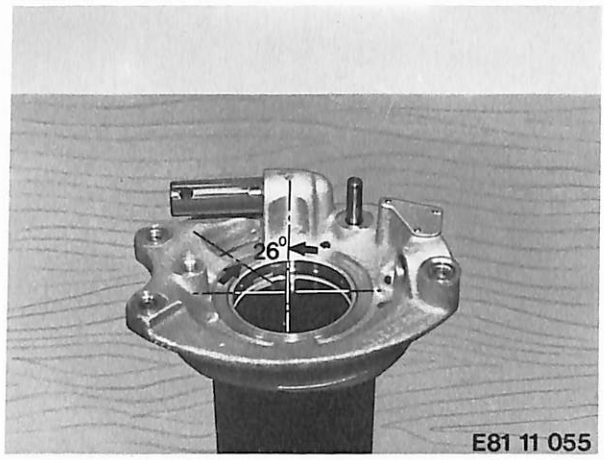

Clamp bearing cap in a vise fitted with soft jaws. Drill two additional oil bores, pos. 1 and 2, in vearing bushing through both 3.2 mm dia. holes already provided in bearing cap. Deburr holes in bearing bushing carefully.

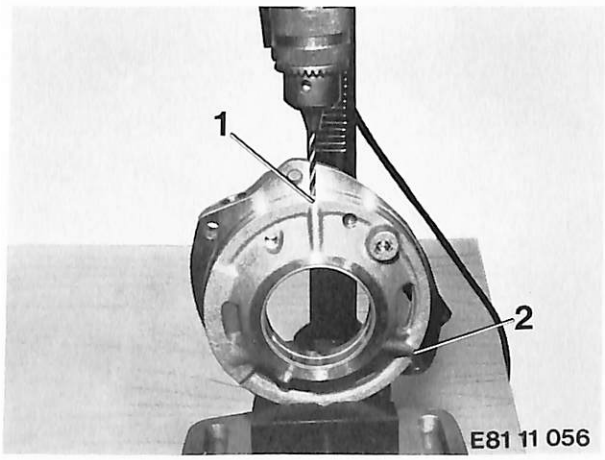

Lock bearing bushing! Drill a center in bearing bushing through the 4 H 8 locating pin hole in bearing cap with a 3.9 mm dia. drill bit. Then drill through bearing bushing with 3.8 mm dia. drill bit (basic ream size bore).

Do not ream through bearing bushing with hand reamer (4 H 8), to prevent lockpin from moving in.
Deburr hole carefully.

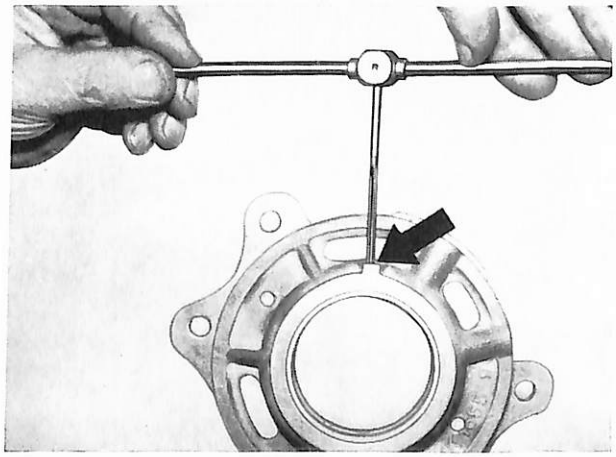

Clamp bearing cap in a vise fitted with soft jaws. Drill two additional oil bores, pos. 1 and 2, in bearing bushing through both 3.2 mm dia. holes already provided in bearing cap. Deburr holes in bearing bushing carefully.

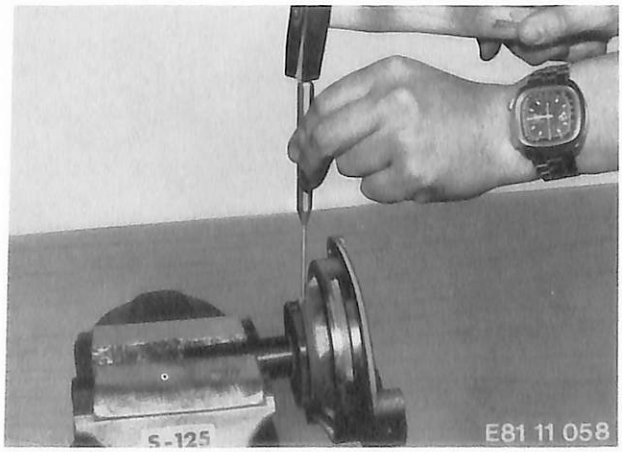

Adjusting Axial Play of Crankshaft

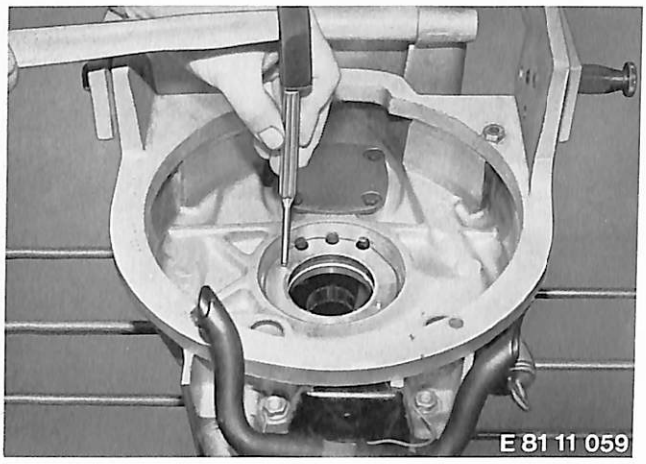

See Specifications for table of thrust washers. To be able to adjust axial play of crankshaft easily, it is recommended to place a red-marked thrust washer on inside and outside of locating pins. Both locating pins must have same amount of protrusion from crankcase on clutch and crankshaft ends. Heat crankcase to straighten or install locating pins.

■

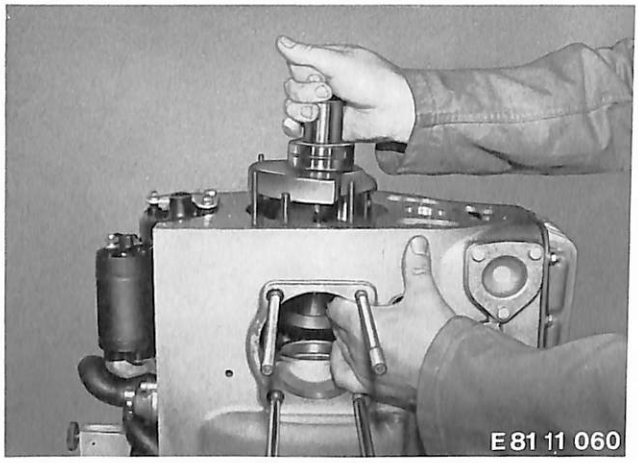

Heat crankcase to 100 ... 120° C, mount on assembly stand and position upright. Guide crankshaft into block carefully. Install bearing caps and tighten bolts. Turn crankcase 180° C. Install clutch housing (flywheel).
Remove and install clutch housing 11 22 000.

■

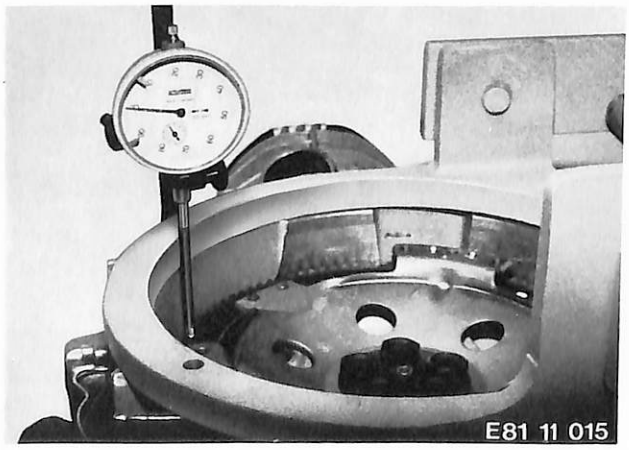

Return crankcase to horizontal position. Mount dial gauge holder, BMW No. 00 2 500, on transmission flange of crankcase. Check axial play.
Remove clutch housing and measure installed, red-marked thrust washer with a micrometer.

■

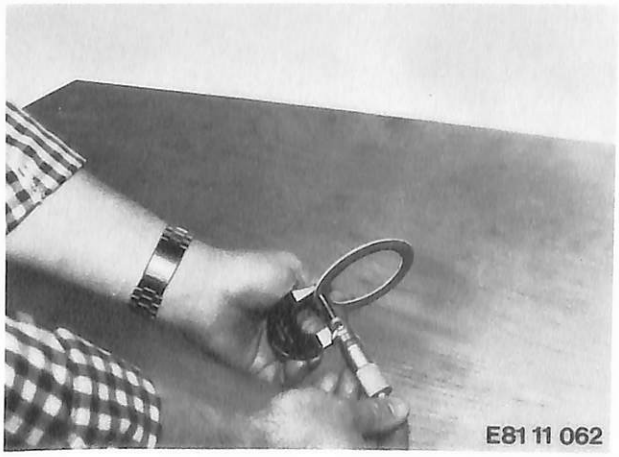

Example:

Measured axial play	0.18 mm
Wanted axial play	0.12 mm
Difference	0.06 mm
Measured thickness of removed thrust washer	2.48 mm
Plus difference	+ 0.06 mm
Required thrust washer thickness	2.54 mm

■

Select a thrust washer, whose thickness is a close as possible to the determined value and does not deviate from it by more than +0.03 mm or −0.04 mm. Install thrust washer of determined thickness on locating pins.

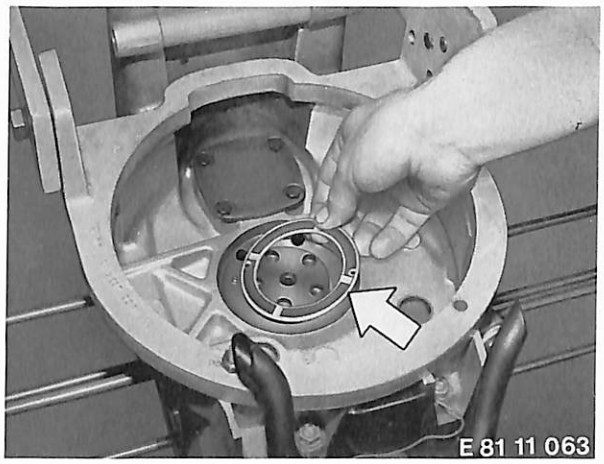

Press shaft seal into crankcase with special tool, BMW No. 11 1 890, used in conjunction with impact mandrel, BMW No. 11 1 880. Press in impact mandrel far enough, that it rests on the thrust washer.

Note:
Place seal in oil about 2 hours before installing.

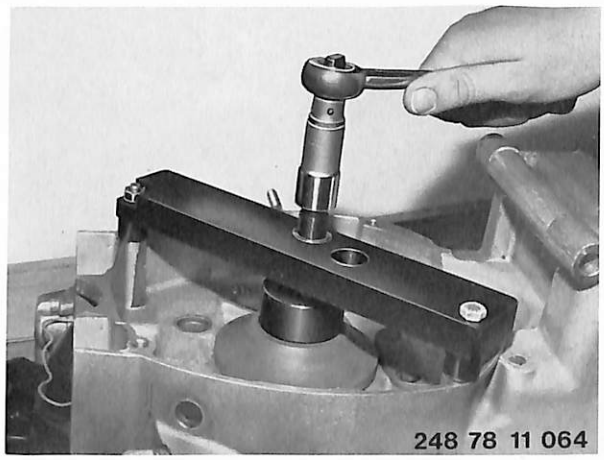

11 22 000 Removing and Installing Flywheel

1) Engine Remains Installed:
   Remove and install transmission – 23 00 020.
   Remove and install clutch – 21 21 000.

2) Engine Removed:
   Remove and install engine – 11 00 050.
   Remove and install clutch – 21 21 000.
   Mount holder, BMW No. 11 2 800, on flywheel that crankshaft will not turn when loosening the flywheel.

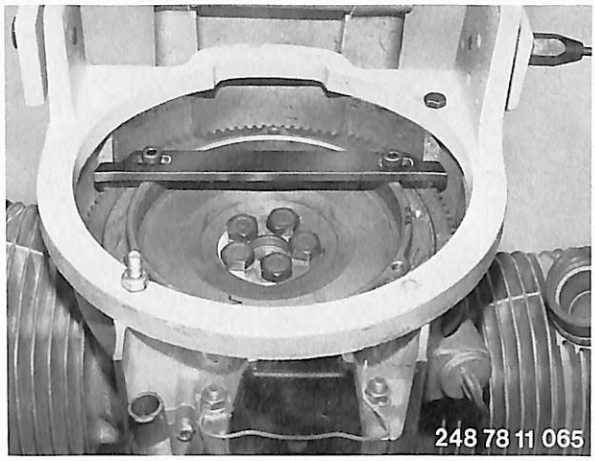

Unscrew the 5 mounting bolts and lift out flywheel carefully with help from two screwed in bolts and do not cant, or pull off from crankshaft stub with puller, BMW No. 11 2 810.

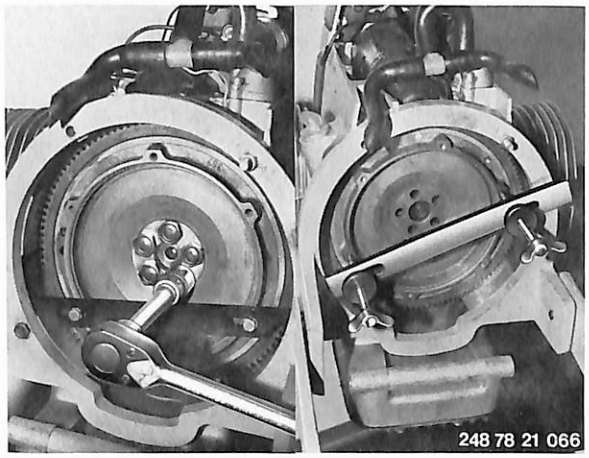

When installing, position piston at TDC and install flywheel on crankshaft stub that TDC mark can be seen in sight hole of case. Install counterholder, BMW No. 11 2 800, in flywheel. Tighten the 5 mounting bolts to specified torque, see Specifications.
The flywheel is mounted with stretch bolts, which must be installed with engine oil coat.
Make sure that bearing surface of flywheel and face of crankshaft are without oil (dry).

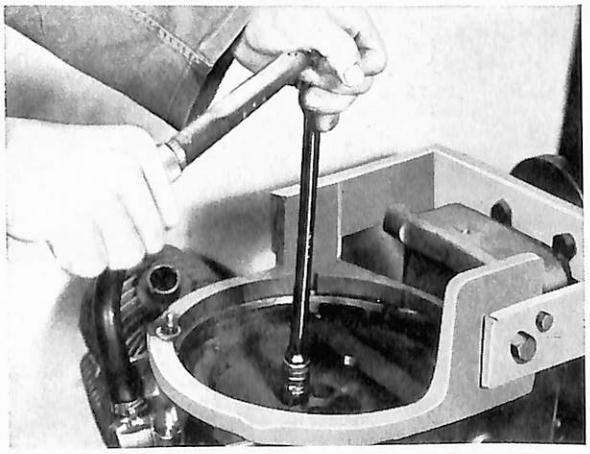

Check lateral runout of flywheel with dial gage (dial gage holder, BMW No. 00 2 500). To take up axial play of crankshaft while checking runout of flywheel, position engine upright in assembly stand. Apply pressure to center of crankshaft stub in installed state.

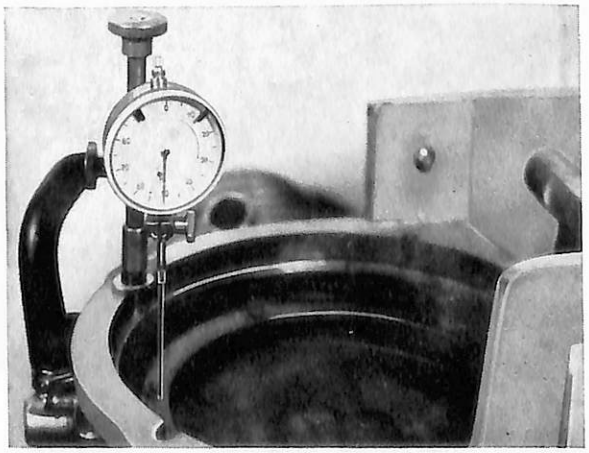

11 22 000 Removing and Installing Clutch Housing (Flywheel) 1981 Models

Remove and install clutch 21 21 000.
Mount holder, BMW No. 11 2 800, on clutch housing and unscrew crankshaft bolts.
See Specifications for tightening torque.

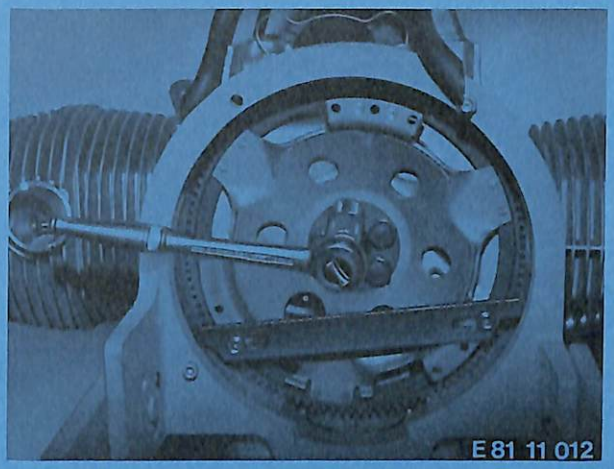

Remove clutch housing (1) and steel washer (2).

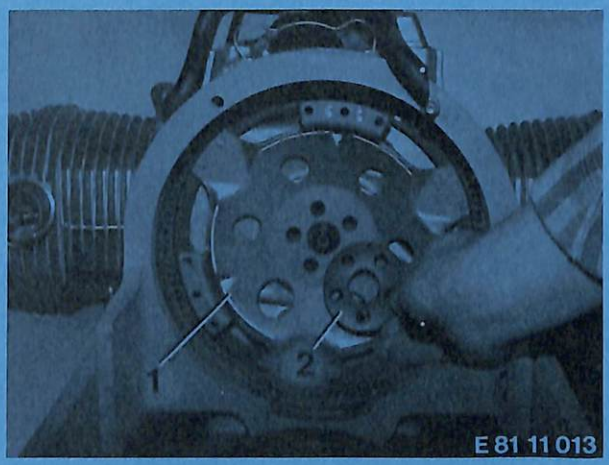

11 24 000 Removing and Installing Connecting Rod

Remove and install engine – 11 00 050.
Remove and install cylinder head – 11 12 080.
Remove and install pistons – 11 25 000.

Only perform all testing and adjusting jobs described in the preparatory procedures when actually required.

Position crankshaft at TDC for removal and installation of connecting rod. Unscrew conrod bolts with a multiple socket wrench. Remove connecting rod and cap together with bearing shells.

Installation Note! Install both connecting rods, that locating pins of connecting rods face alternator side.

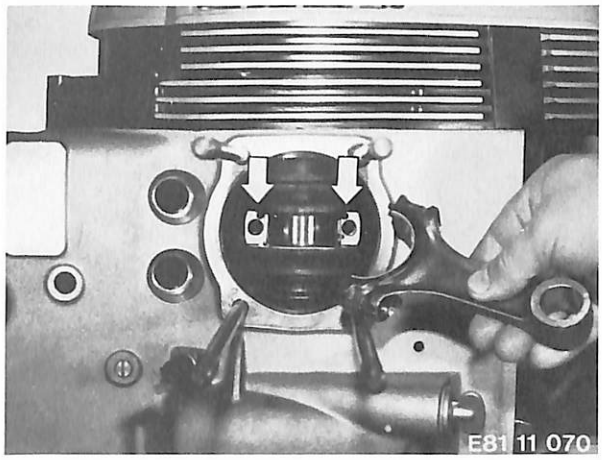

Inspecting and Repairing: Measure connecting rod thickness at thrust bearing with a micrometer. Refer to Specifications for dimensions.
Both connecting rods of one engine must have the same weight or color code.
Check tightness and size of piston pin bushing.

If inside diameter of piston pin bushing has been worn beyond wear limits, press out piston pin bushing. Refer to Specifications for dimensions.

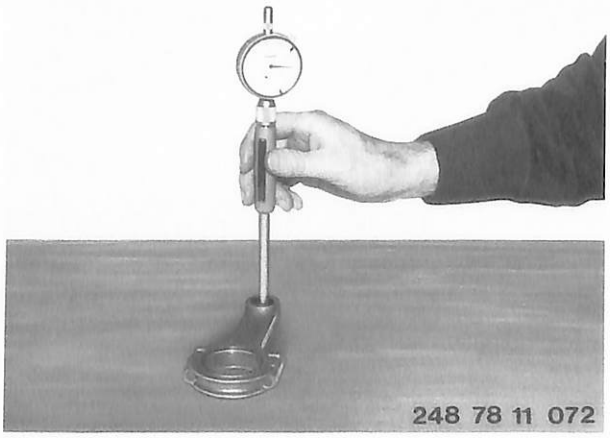

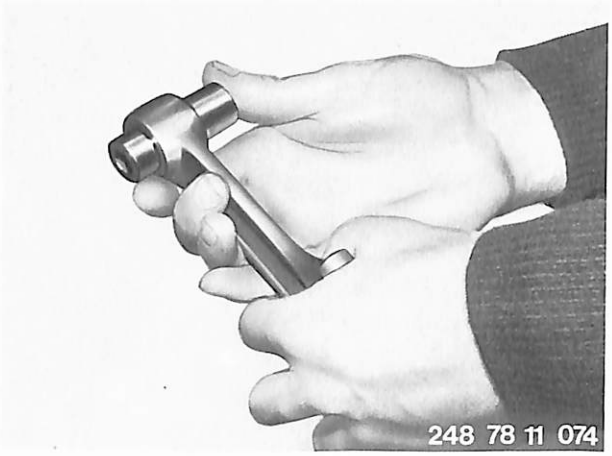

The piston pin should slide easily into a new bushing under thumb pressure.

■

Measuring Connecting Rod

Install the bearing shells provided for testing in the connecting rod. Take up connecting rod on a hardened and ground master mandrel and tighten bolts. Master mandrel must not have radial play in the thrust bearing bore. Push a ground and hardened master mandrel, approx. 150 mm long, into piston pin bushing so that mandrel extends from both ends by same amount.

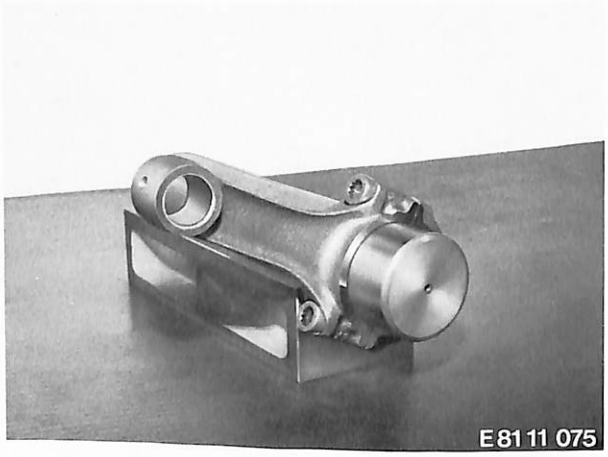

■

Set up two v-blocks of same size on a calibrated measuring plate. Place master mandrel with connecting rod in v-blocks. Position connecting rod to be vertical with fixture. Use a stand-type dial gauge on ends of master mandrel, to check whether piston pin axis is parallel with thrust journal axis. Refer to Specifications for information on checking parallel of connecting rods.

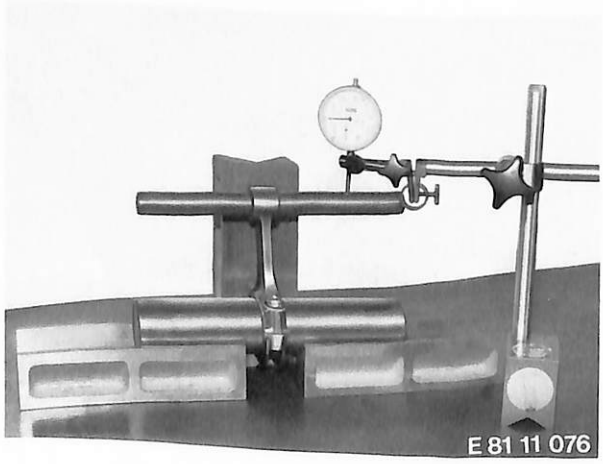

■

Check distortion of connecting rod. This requires that connecting rod be again taken up in v-blocks and a support be placed underneath the piston pin eye, that there is approximately equal distance from the measuring plate to the center of the thrust bearing bore and piston pin bore. Check connecting rod for distortion by applying a dial gauge on ends of master mandrel. Refer to Specifications for max. permissible deviation.

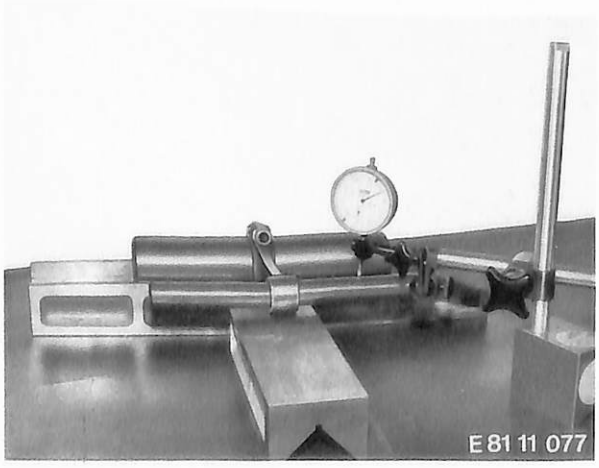

■

Press bearing shells into cleaned connecting rod bearing basic bore.

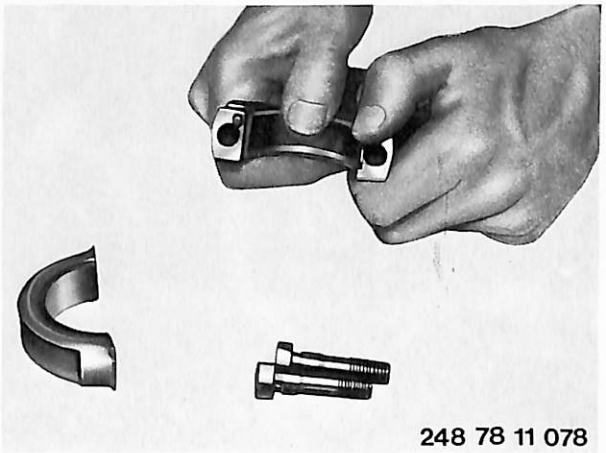

Give connecting rod bearing shells a light coat of Molykote Paste G before installing.

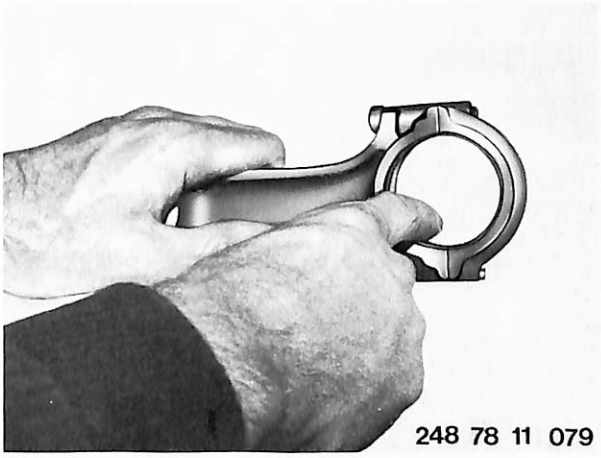

11 25 000 Removing and Installing Piston

Remove and install cylinder head – 11 12 080.

Pull off cylinder from 4 anchor bolts. Be careful not to damage piston when piston leaves cylinder. Install a piece of wood behind the piston, between the anchor bolts, to protect the piston.

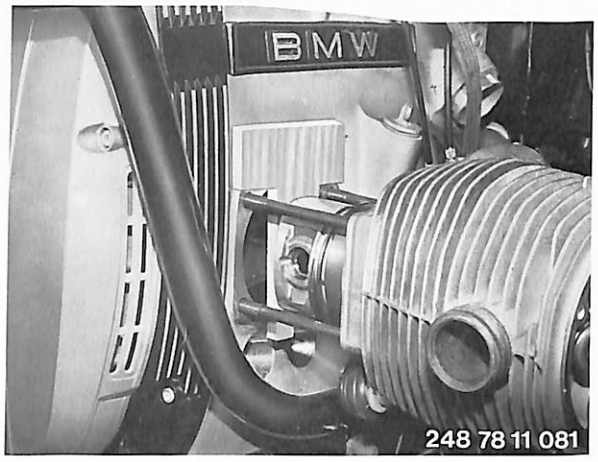

Lift out piston pin circlip by pressing a scribe or small screwdriver into lateral groove. Press out piston pin with a standard tool or mandrel, BMW No. 11 2 920.

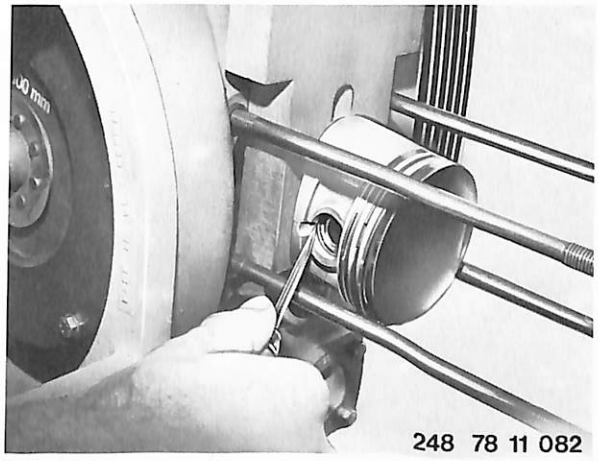

Installation Note! Install piston that „vorn" (= front) on piston crown faces forward. This guarantees correct installation of piston with an offset axis. The piston need not be heated to install the piston pin. Only use pistons of same weight classification in one engine.

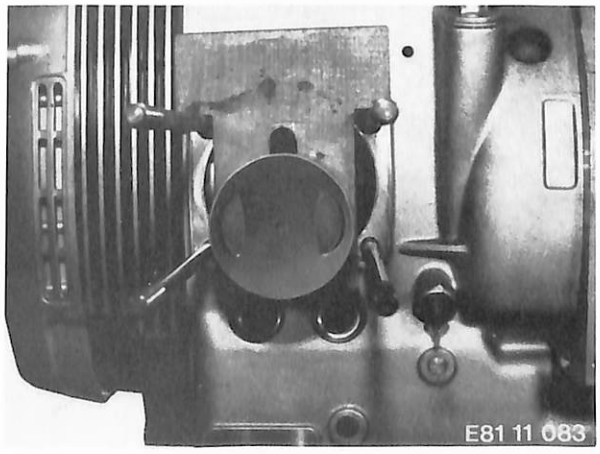

Install piston pin circlip in groove that one end covers lateral groove well. Press center part of circlip into piston pin bore that both ends of circlip come close together. Push circlip into groove all the way with mandrel, BMW No. 11 2 920.

Installation Note! Prior to installation of cylinder, clean cylinder base and cylinder sealing surfaces on engine block with nitro thinner. Be careful not to pinch round cord seals on upper staybolts.

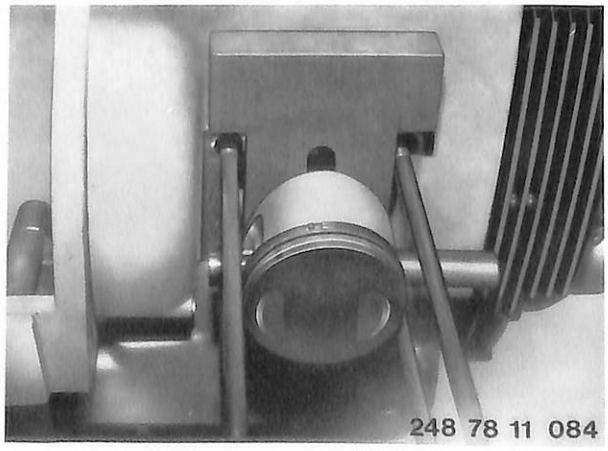

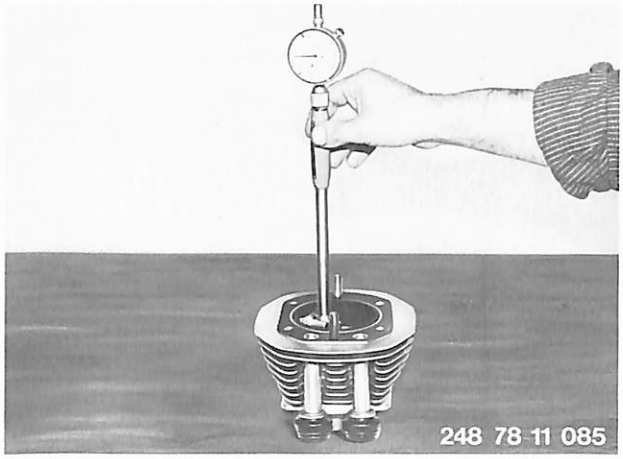

Inspecting and Repairing: Measure cylinder bore with an internal calipers, which is applied in piston pin direction and 90° lateral from this point, 10 mm (0.394") from top, at center and bottom. The ambient temperature should be 20° C (68° F).

■

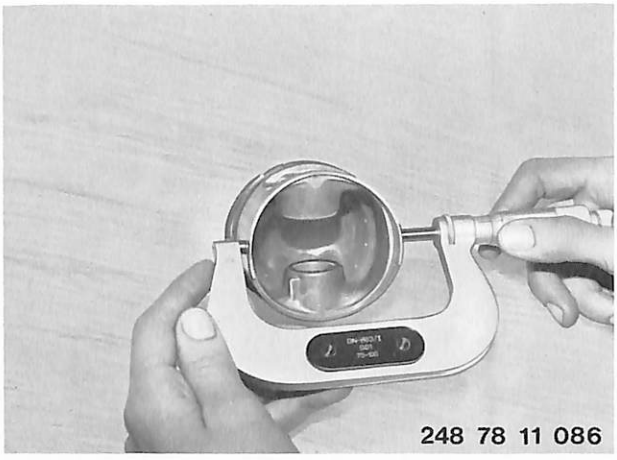

Measure piston diameter at piston skirt with a micrometer. Refer to Specifications for measuring data.

■

Check end and

■

side clearances of piston rings with a feller gage. Refer to Specifications for standard size and oversize cylinder bore diameters and piston diameters, as well as end and side clearances of piston rings.

■

11 31 061 Replacing Sprockets

Engine installed or removed.
Drain oil when engine remains installed!
Remove and install engine – 11 00 500.
Remove and install spark trigger – 12 11 060.
Remove and install timing case cover – 11 14 060.
Remove chain guide rail (1) and chain tensioning lever (2). Open chain lock (3) and take off chain.

Installation Note! Chain lock must be closed in chain's direction of movement. Position chain guide rail parallel to chain.

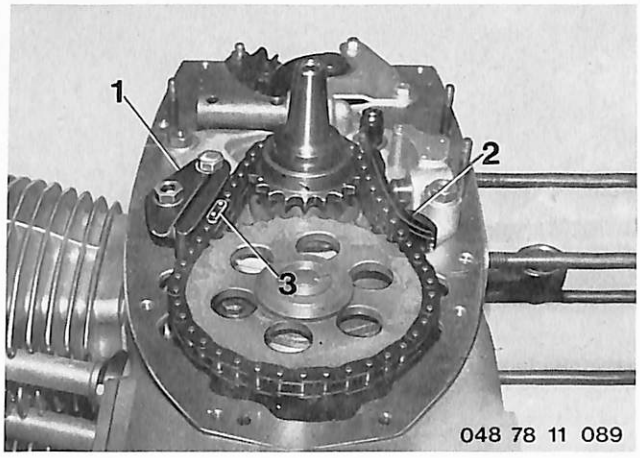

Pull off sprocket and bearing from crankshaft.
Puller, BMW No. 11 26 00, and pulling shell, BMW No. 11 26 06 (exchange against pulling shell with groove).

Installation Note! Heat sprocket to approx. 80° C (175° F).

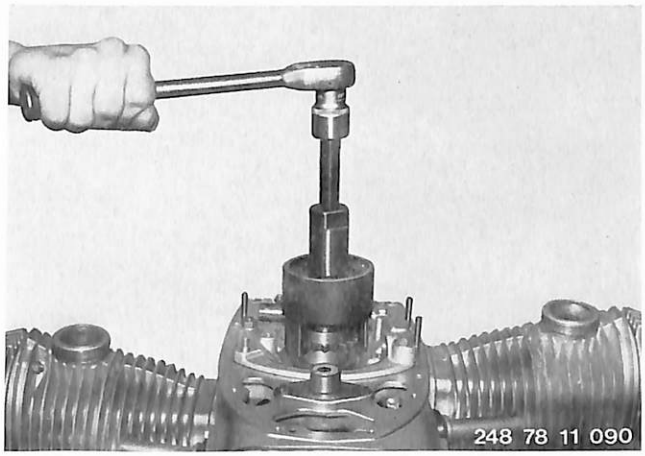

Pry off camshaft sprocket with two screwdrivers, or pull off with a standard two-arm puller.

Installation: When installed the marks on both sprockets must be aligned.

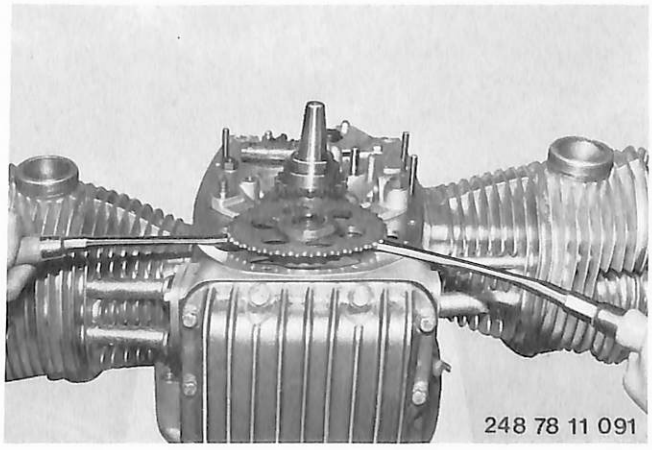

11 34 504 Adjusting Valve Clearance

Unscrew cap nut and both nuts (arrows). Remove cylinder head cover and gasket.

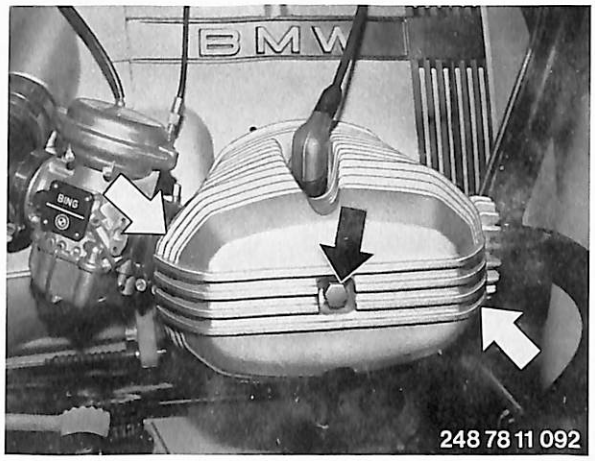

Adjust valve play between the valve stem and rocker arm with a feeler gauge blade on a stopped cold engine. This requires unscrewing the spark plugs and turning the engine with the kickstarter or rear wheel after engaging a gear until the cylinder being adjusted is at compression top dead center. Both valves will be closed. If necessary, adjust the adjusting screw after loosening the locknut. Then tighten locknut. Recheck valve play. See Technical Data for valve play.

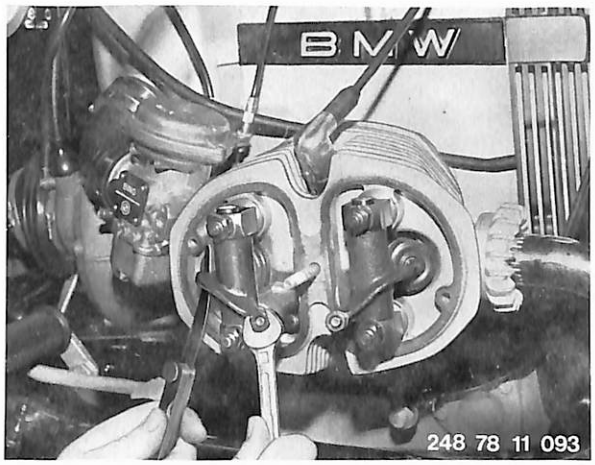

11 41 000 Removing and Installing Oil Pump

First Method: Remove and install engine – 11 00 050.
Pictures and text have been produced for this method.

Second Method: Remove and install transmission – 23 00 020 (engine remains in frame).

Remove and install clutch – 21 21 000.
Remove and install flywheel – 11 22 000.

Remove end cover from oil pump body after unscrewing the four hexagon head screws.

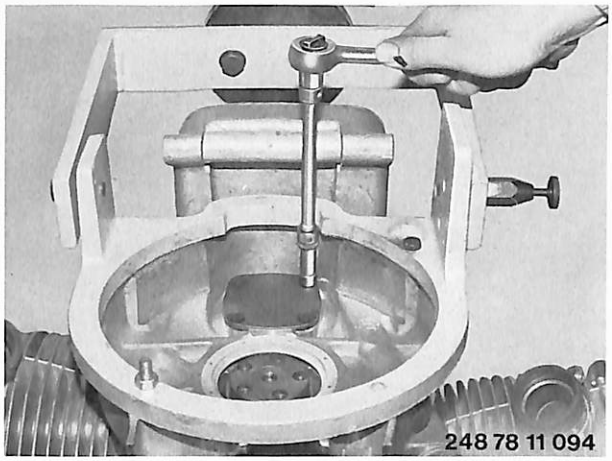

Take out inner and outer rotors from body with wire hooks.

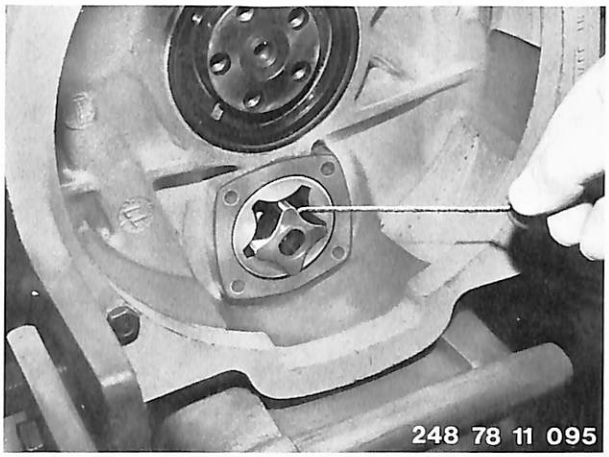

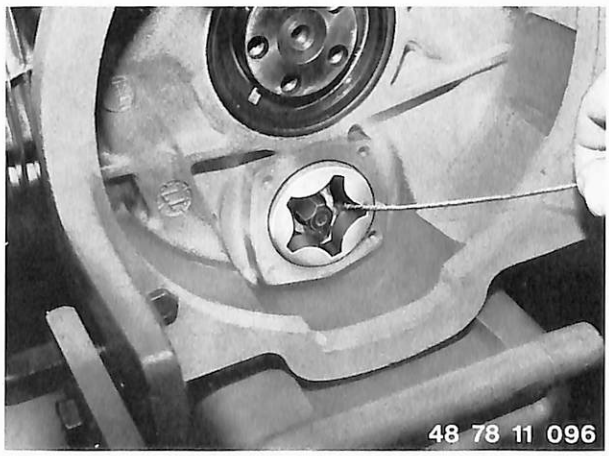

Inspecting:

Check play between outer rotor and pump body, see Specifications.

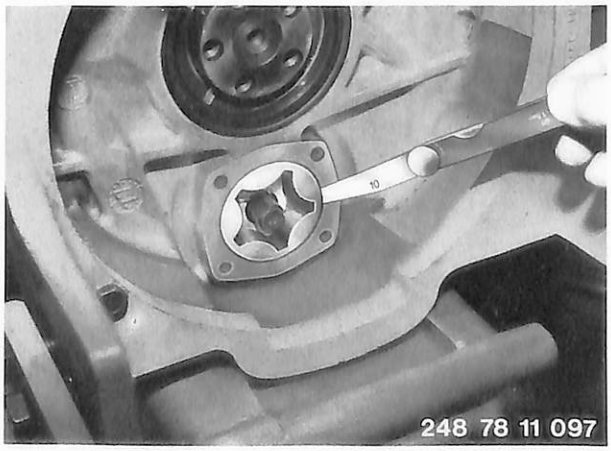

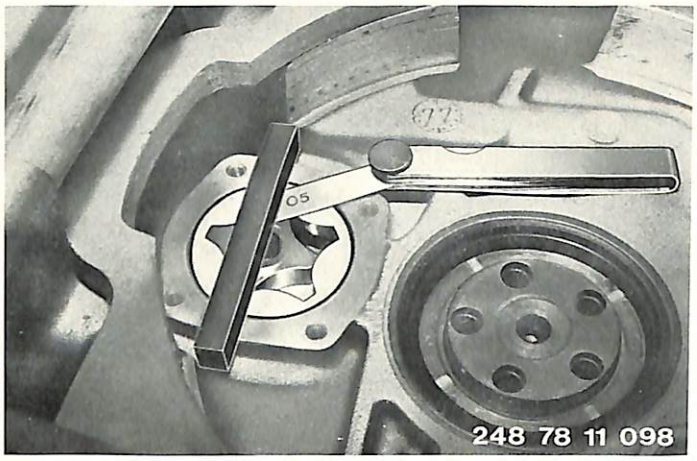

Check play between mating surface (pump body) and sealing surface (rotor), see Specifications.

■

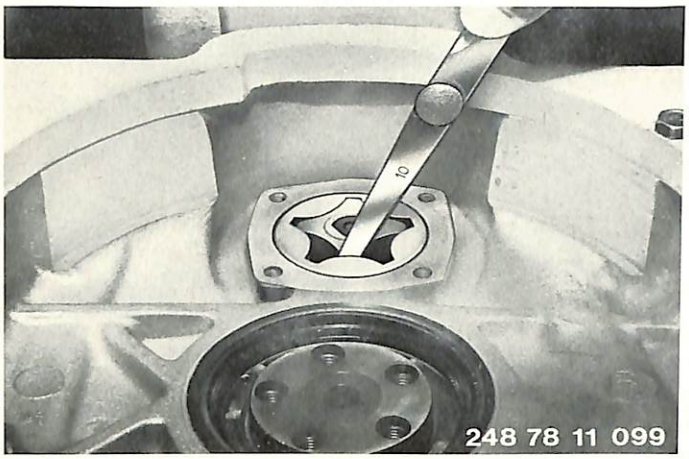

Check gap between inner and outer rotors, see Specifications.

When reassembling, make sure that O-ring in end cover is in perfect condition.

■

When assembled, O-ring must be compressed so far that the end cover rests flat against mating surface of pump body.

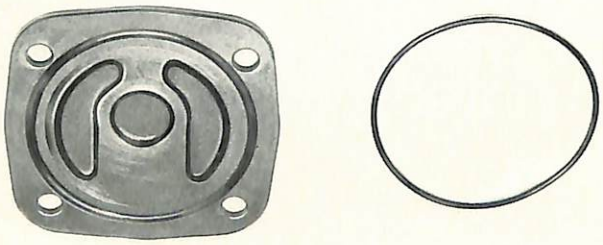

248 78 11 100

■

Trouble-shooting – engine

Fault	Cause	Remedy
Loss of compression	Valve leaking or bent	Regrind or renew
	Piston ring spring loading to weak, ring gap too large	Check, renew if necessary
	Piston rings broken	Renew
Low power output	Incorrect ignition timing	Check, adjust if necessary
	Float level too low	Check and adjust if necessary
	Air cleaner blocked	Renew element
	Fuel tap blocked	Clean, check flow rate
	Tank vent defective	Drill vent holes (see SI)
Engine reluctant to start or will not start at all	Valve clearances too low	Check and adjust if necessary
	Choke cannot be closed	Check choke setting
	Ignition timing incorrect	Check timing
	Breaker points gap too small	Reset points
	Contacts eroded	Renew
	Spark plug gaps incorrect	Reset
	Spark plugs wet	Dry out
Engine does not accelerate smoothly	Centrifugal ignition advance too small or not working	Renew centrifugal governor
	Broken springs	Renew springs
	Cam seized to shaft, shaft rusted	Free contact breaker cam
	Spark plug gaps incorrect	Reset
Engine starts, but immediately stalls	Break or short circuit at condenser	Renew condenser
Engine misfires – high fuel consumption	Defective ignition lead or spark plug cap	Renew
	Defective suppressor resistors	Renew
Pre-ignition (pinking)	Incorrect ignition timing	Retime ignition
	Incorrect needle position at carburetor	Reset needle to correct position
Oil pressure too low	Main bearing play excessive	Measure crankshaft and bearings
	Blocked oil suction head	Check, renew if necessary
	Pressure relief valve stuck open	Remove and repair valve

12 Engine Electrical Equipment

Specifications		Page 12– 0/3
Specifications – 1981 models		12– 0/7
12 11 004	Ignition timing – adjust	12–11/1
12 11 004	Ignition timing – adjust (1981 models)	12–11/3
12 11 060	Ignition trigger – remove and install	12–11/5
12 11 141	Points – replace	12–11/6
	Ignition – troubleshoot	12–11/7
	Ignition – troubleshoot (1981 models)	12–11/9
12 13 100	Ignition coil (one) – remove and install	12–13/1
12 13 100	Ignition coil (double) – remove and install (1981 models)	12–13/3
12 14 010	Control unit – remove and install	12–14/1
12 14 025	Cooler – remove and install	12–14/1
12 31 009	Alternator, diode carrier and regulator – check	12–31/1
12 31 019	Alternator with regulator – quick test	12–31/2
12 31 020	Alternator – remove and install	12–31/2
12 31 689	Stator coil and rotor – check	12–31/3
12 32 000	Regulator and alternator – remove and install	12–31/4
	Alternator – troubleshooting	12–31/5
12 41 009	Starter in motorcycle – check	12–41/1
12 41 020	Starter – remove and install	12–41/1
12 41 513	Starter – disassemble and assemble	12–41/3
12 41 541	Carbon brushes – replace	12–41/4
12 41 602	Starter – overhaul	12–41/5
12 41 701	Field coil – replace	12–41/6
	Starter – troubleshoot	12–41/7

Specifications

Model	R 65
Starter Type	Bosch DF 12 V
Starting bypass current in A	320
Output in kW	0.7
Torque in mkp (ft lbs)	0.750 (5.4)
Starter relay	Bosch
Armature axial play in mm (in.)	0.10 . . . 0.15 (0.004 . . . 0.006)
Alternator Type	Bosch G 1 14 V 20 A 21/280 W
Alternator drive	direct off of crankshaft
Max. output in W/V	280/14
Max. current in A	20
Resistance between phase outlets in ohms	0.62
Charging begins at rpm	980
Max. speed in rpm	10.000
Max. runout on slip rings in mm (in.)	0.06 (0.0024)
Min. diameter of slip rings in mm (in.)	26.8 (1.055)
Voltage Regulator Type (Bosch)	0 190 601 009 AD 1/14 V
Regulating voltage in V Without load With load	 13.55 . . . 14.25 13.9 . . . 13.4

Engine Electrical Parts

Specifications

Model	R 65
Diode Carrier Type (Bosch)	D 120 915 158 14 V 20 A
Ignition Coil Type (Bosch)	E 6 V
Starting spark length at 3000 sparks/min. and 3 volts in mm (in.)	8 (0.315)
Operating spark length at 3600 sparks/min. in mm (in.)	13.5 (0.531)
Spark Plugs Threads	M 14 a 1.25
Bosch	W 225 T 30
Beru	225/14/3A
Champion	N 6 Y
Electrode gap in mm (in.)	0.7 (0.028)
Distributor Type (Bosch)	Mech. ignition breaker with centrifugal control in sealed housing, dynamic adjustment
Control begins at rpm	1500
Control ends at rpm	3000
Contact breaker shaft	Bosch Ft 1 v 8 grease
Contact breaker gap in mm (in.)	0.45±0.05 (0.018±0.002)

Specifications

Model	R 65
Dwell angle in degrees	120 at 1000 rpm
Capacitor	0.2 μF + 20% Bosch No. 1 237 330 295
Static ignition timing for assembly of engine	6° before TDC
Control range in degrees on crankshaft	26

Torque Values in Nm (ft lbs)

Armature mounting screw	23 . . . 27 (17 . . . 20)	Spark plugs	23 . . . 30 (17 . . . 22)
Starter mounting screws	47.5 (34)		

Tighten all other bolts and nuts to common torque values as listed in tables supplied by bolt suppliers or in new BMW Standard 60002.0.

Specifications 1981 Models

Model	R 65	R 65 LS
Starter Type	Bosch DF 12 V	
Starting bypass current in A	320	
Output in kW	0.7	
Torque in mkp (ft lbs)	0.750 (5.4)	
Starter relay	Bosch	
Armature axial play in mm (in.)	0.10 . . . 0.15 (0.004 . . . 0.006)	
Alternator Type	Bosch G 1 14 V 20 A 21/280 W	
Alternator drive	direct off of crankshaft	
Max. output in W/V	280/14	
Max. current in A	20	
Resistance between phase outlets in ohms	0.62	
Charging begins at rpm	980	
Max. speed in rpm	10.000	
Max. runout on slip rings in mm (in.)	0.06 (0.0024)	
Min. diameter of slip rings in mm (in.)	26.8 (1.055)	
Voltage Regulator Type (Wehrle)	E 1051 B/14 V	

Specifications 1981 Models

Model	R 65	R 65 LS
Diode Carrier Type (Bosch)	D 120 915 158 14 V 20 A	
Ignition Coil Type (Bosch)	Double-spark ignition coil 12 V	
Spark Plugs Threads	M 14 a 1.25	
Bosch	W 5 D	
Beru	14 – 5 D	
Champion	N 6 y	
Electrode gap in mm (in.)	0.7 (0.028)	
Distributor Type (Bosch)	Breakerless ignition pulse transmitter (Hall sensor) with integrated centrifugal advance ignition control	
Control begins at rpm	1500	
Control ends at rpm	3000	

Engine Electrical Parts

Specifications 1981 Models

Model	R 65	R 65 LS
Static ignition timing for assembly of engine	6° before TDC	
Control range in degrees on crankshaft	26	

Torque Values in Nm (ft lbs)

Armature mounting screw	25 ± 2 (18 ± 1)	Spark plugs	20 + 5 (14 + 4)
Starter mounting screws	47.5 (34)		

Tighten all other bolts and nuts to common torque values as listed in tables supplied by bolt suppliers or in new BMW Standard 60002.0.

Alternator

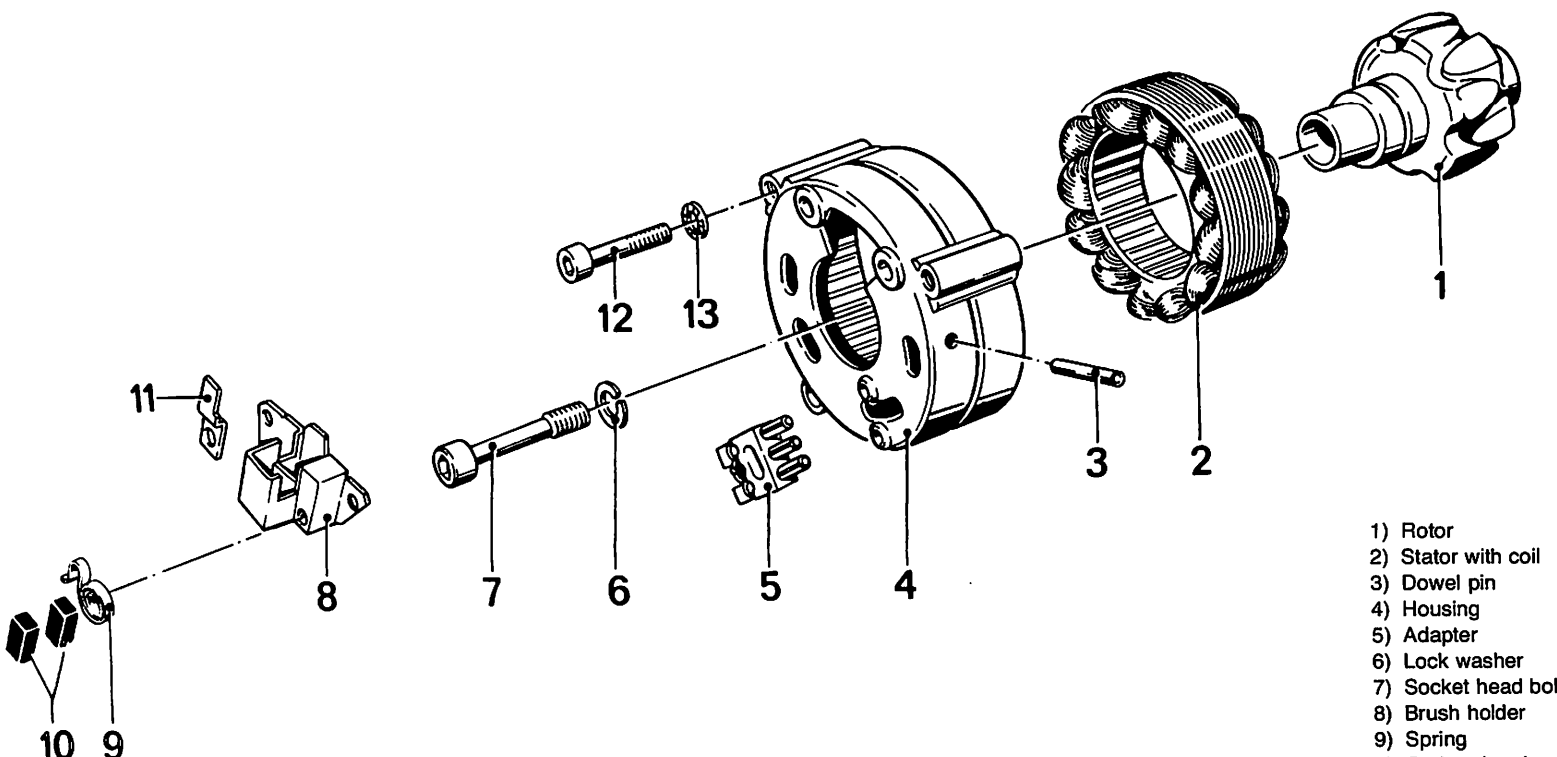

1) Rotor
2) Stator with coil
3) Dowel pin
4) Housing
5) Adapter
6) Lock washer
7) Socket head bolt
8) Brush holder
9) Spring
10) Carbon brush set

Starter

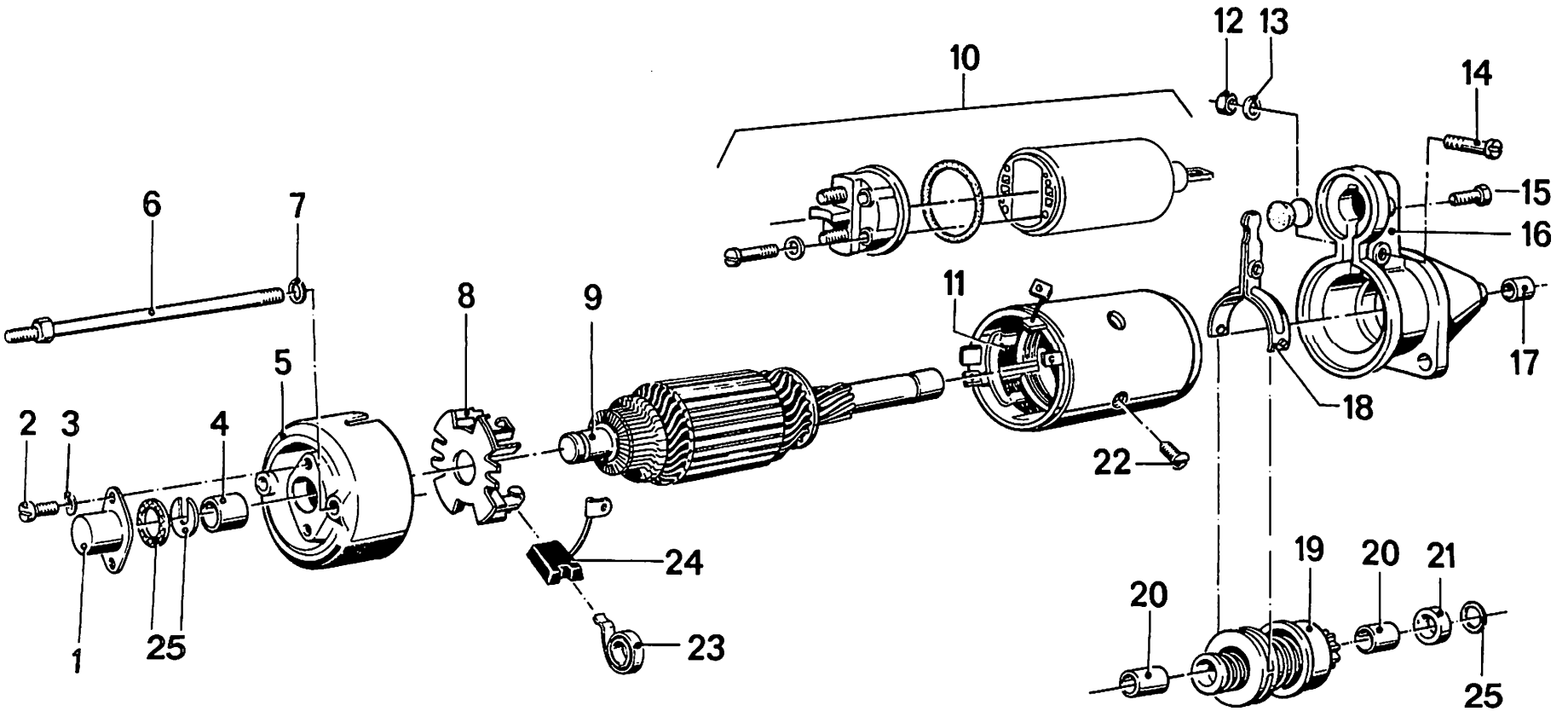

1) End cap
2) Fillister head screw
3) Lock washer
4) Bearing sleeve
5) Commutator bearing
6) Fillister head screw
7) Shim
8) Brush holder plate
9) Armature
10) Solenoid
11) Field coil
12) Hexagon nut
13) Lock washer
14) Fillister head screw
15) Countersunk screw
16) Drive bearing
17) Bearing sleeve
18) Operating lever
19) Starter gear
20) Bearing sleeve
21) Stop ring
22) Countersunk screw
23) Spring
24) Carbon brush set
25) Washer

12 11 004 Adjusting Ignition Timing

Take off engine cover after unscrewing both socket head screws (arrows).

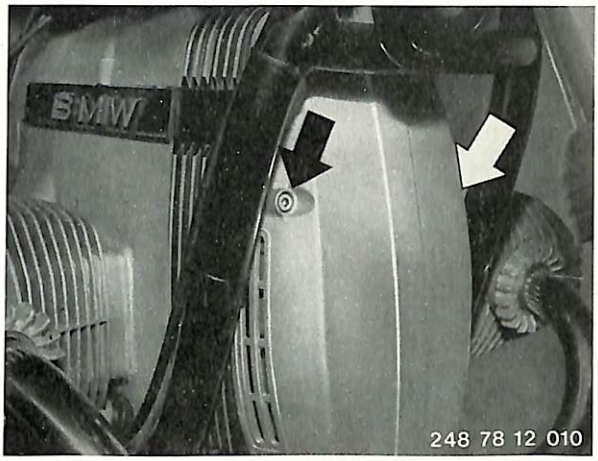

Unscrew slotted head screw on distributor cap and take off cap.

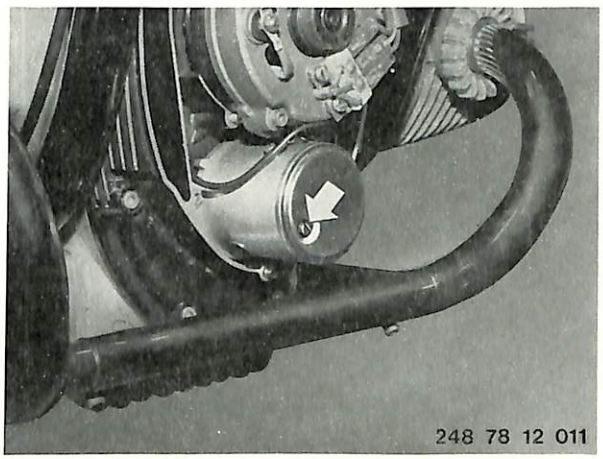

Unscrew spark plugs and turn engine clockwise (opposite forward direction) with socket head screw for rotor.

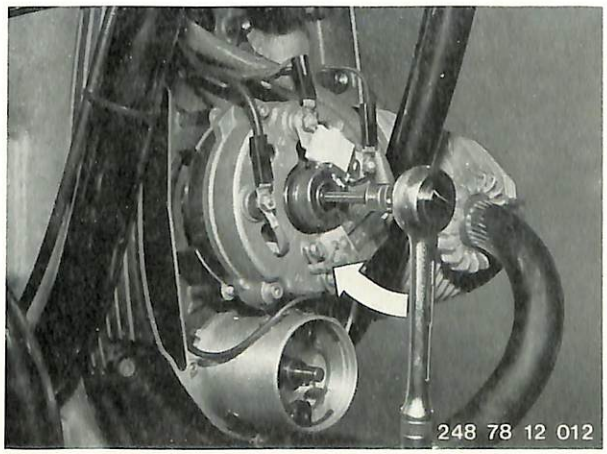

Contact breaker arm (hammer) must lift fully.
Check 0.40 mm (0.016") point gap with a feeler gage.
If necessary, replace points – 12 11 141.

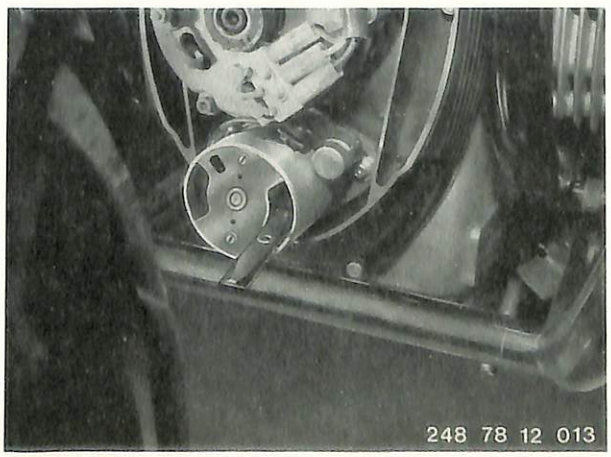

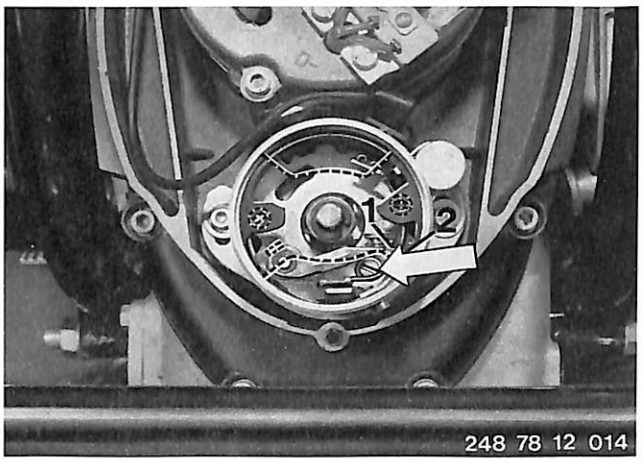

Adjusting Point Gap: Loosen screw (arrow). Place tip of screwdriver in slot of point carrier (1) and adjust point gap by turning against anvil (2).
Tighten screw.
Recheck point gap or dwell angle (only with dwell angle tester).
Refer to Specifications for point gap or dwell angle.

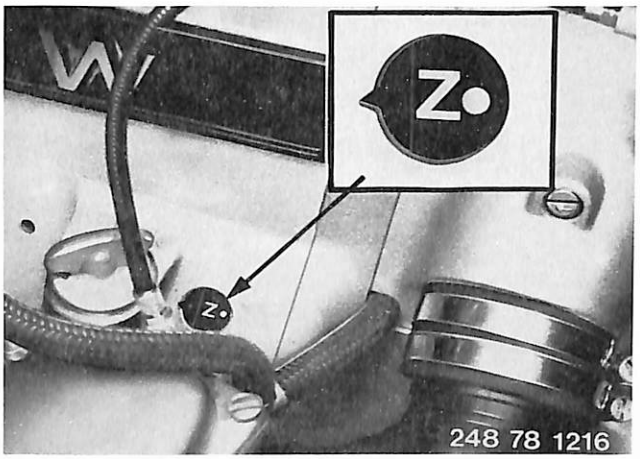

Checking Ignition Timing: Connect stroboscope lamp to battery and ignition lead. Start engine and increase speed to 3500 rpm. When aiming stroboscope lamp at flywheel, white point „Z" must appear in sight hole (full advance ignition).
To check the ignition control curve, turn setwheel on stroboscope lamp until „TDC" mark can be seen. The actual ignition angle can now be read from scale on stroboscope lamp.
Refer to Specifications for ignition angle data.

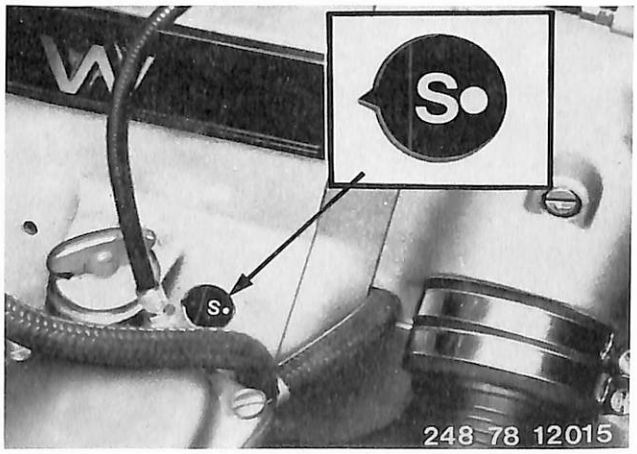

With engine running at idle speed (950 ± 150 rpm), center white stripe mark „S" on flywheel must align with sight hole mark (2). If stripe is below center (1), ignition is adjusted too late, and if above center (3), too early.

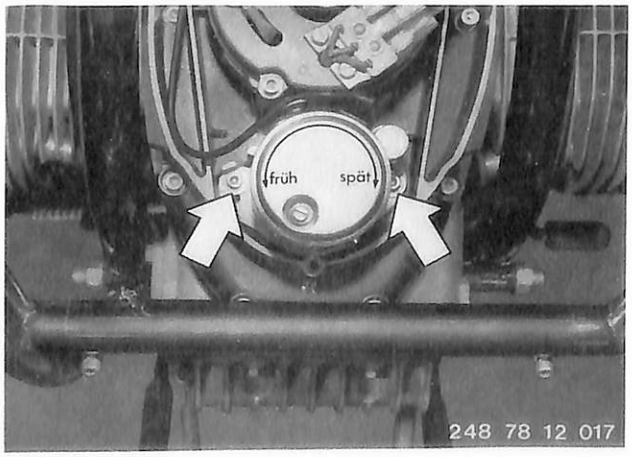

Adjusting Ignition Timing: Engine running. Loosen socket head screws of spark trigger (arrows). Turn spark trigger in direction of engine rotation to retard or in opposite direction to advance ignition timing. (Crankshaft and camshaft turn in same direction.)
Tighten screws again.

12 11 060 Removing and Installing Spark Trigger

Remove engine cover.
Pull off flat female plug (1). Unscrew socket head screws (2) and pull out spark trigger from timing case cover.

Note! Never disassemble spark trigger; always replace entire unit.

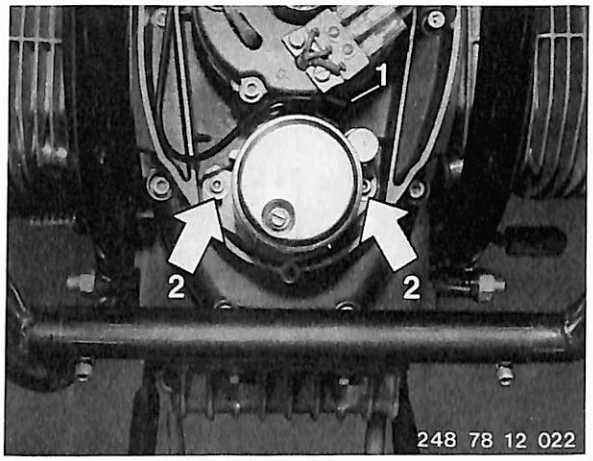

Replace seal (arrow) each time spark trigger is removed.

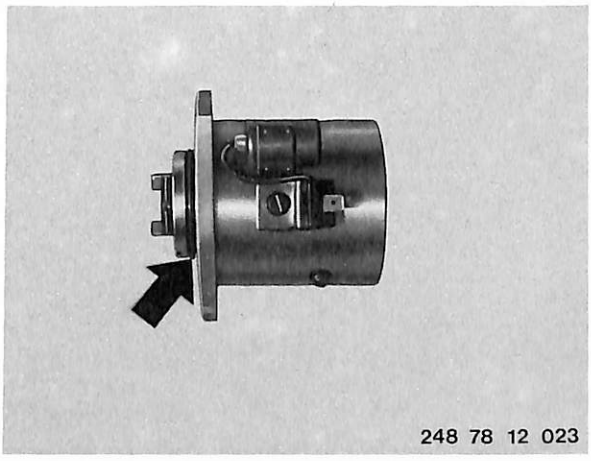

12 11 141 Replacing Points

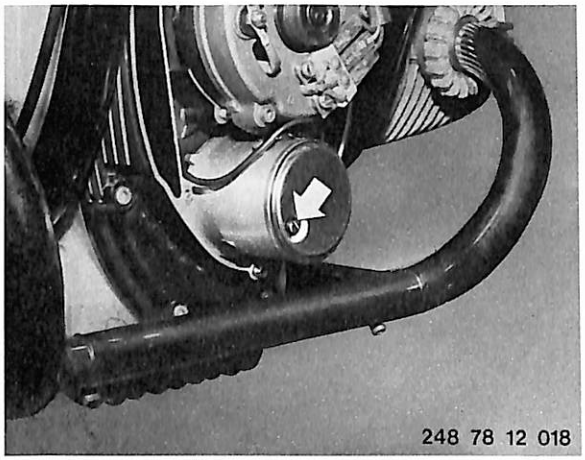

Remove engine cover after loosening the socket head screws. Unscrew slotted head screw on spark trigger cap and remove cap (arrow).

■

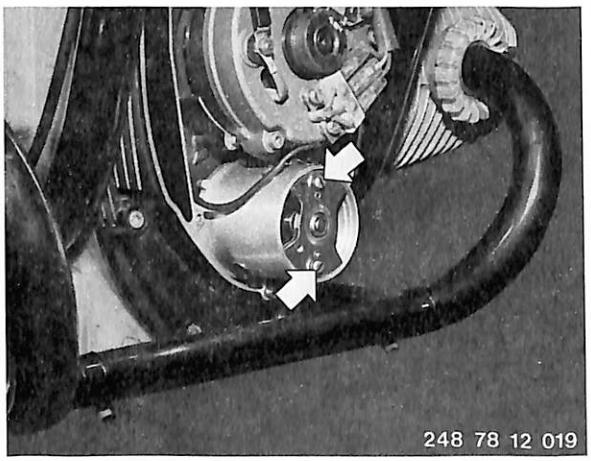

Unscrew the two slotted head screws (arrows) for support bracket and remove bracket.

■

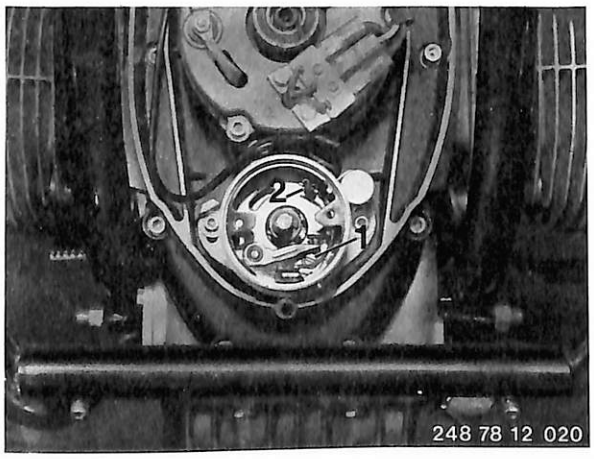

Unscrew fillister head screw (1), pull off flat female plug (2) and pull out entire contact breaker point.

■

12 11 004 Adjusting Ignition Timing (Static) 1981 Models

Caution!

This motorcycle is equipped with a high voltage transistor coil ignition system (TCI). Touching power carrying parts of system while engine is running is very dangerous!

Unscrew both socket head bolts (arrows) and take off engine guard.

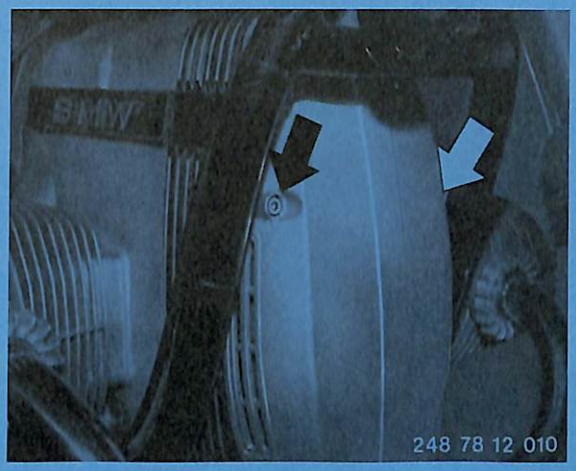

Disconnect 3-pin plug (arrow) and connect ignition tester, BMW No. 12 3 650, on ignition box.

Note:
Remove wire clamp of plug connection.

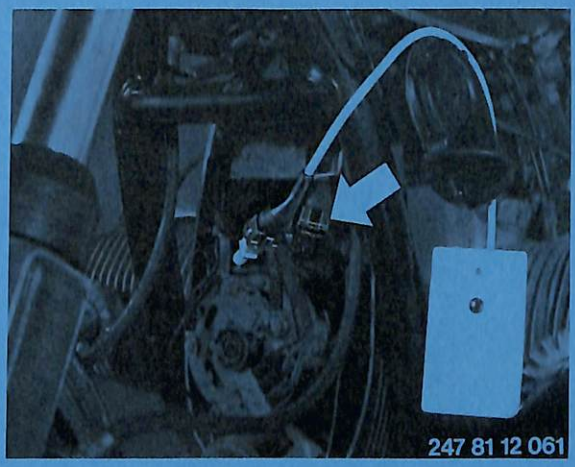

Unscrew spark plugs and crank engine clockwise (opposite forward direction) on socket head bolt for rotor.

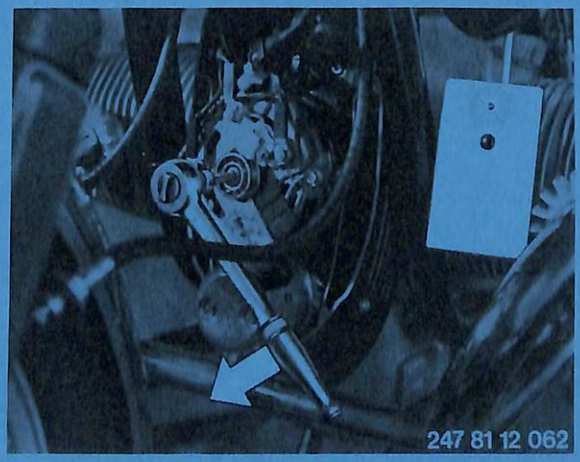

Center white stripe of flywheel mark "S" must be aligned with inspection hole mark on engine block (second figure, page 12-11/2), when diode on ignition tester comes on. Turn ignition box accordingly as shown if necessary.

Turned clockwise = ignition timing retarded.
Turned anticlockwise = ignition timing advanced.

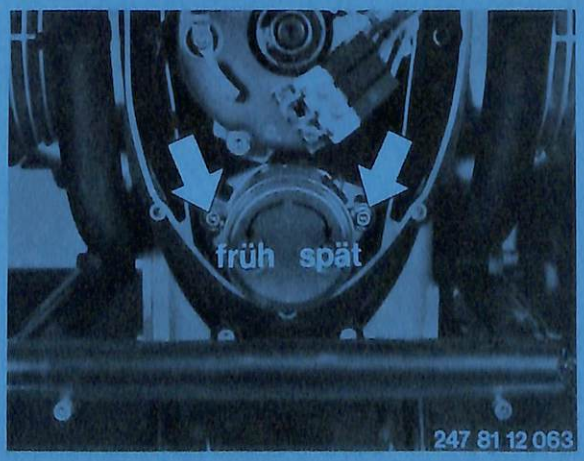

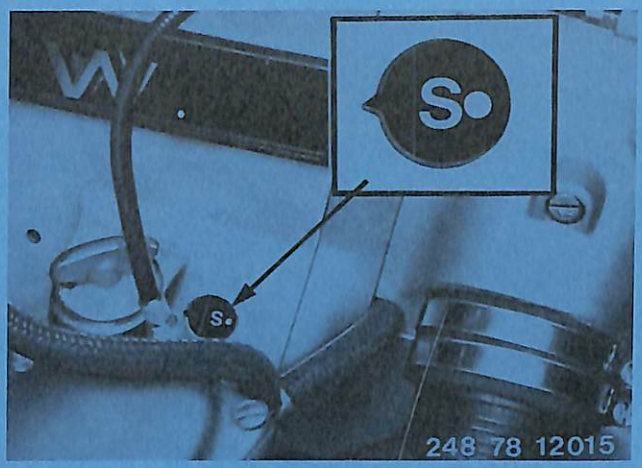

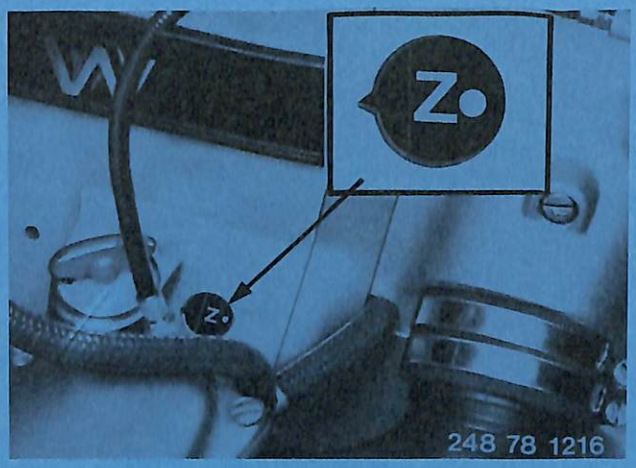

Checking Ignition Timing (Dynamic)

Connect stroboscope lamp on battery and ignition wire. Start engine and boost speed to 3500 rpm. When aiming stroboscope lamp at flywheel, white dot "Z" should appear in the inspection hole (full advance ignition). To check the ignition control curve, turn setwheel of stroboscope lamp until "TDC" mark appears. The actual ignition angle can now be read from scale on stroboscope lamp.
See Specifications for ignition angle values.

■

When engine is running at idle speed (950 ± 150 rpm), the white stripe or white dot of flywheel mark "S" must be aligned with the inspection hole mark (2). If mark is seen below center, ignition timing is too late, and when above center, ignition timing is too early.

■

12 11 060 Removing and Installing Ignition Trigger

Remove engine guard.
Pull off flat female plug (1), unscrew socket head screws (2) and pull ignition trigger out of timing case cover. (1) not applicable beginning with 1981 models.

Note:
Never disassemble ignition trigger – only replace as an assembly!

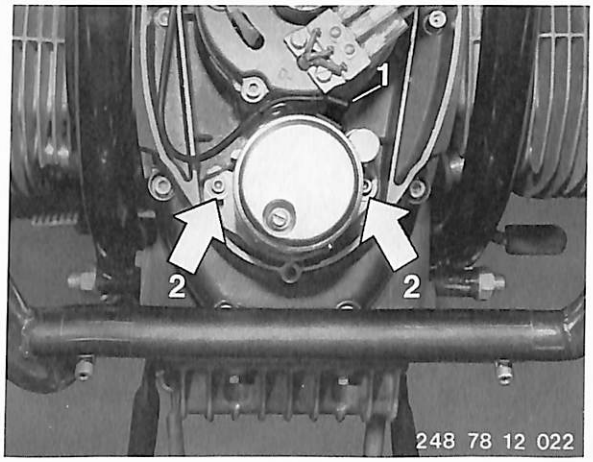

Replace seal (arrow) each time ignition trigger is removed.

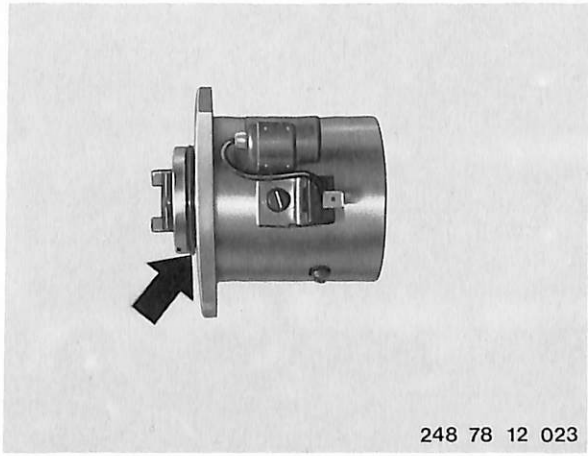

12 11 141 Replacing Points

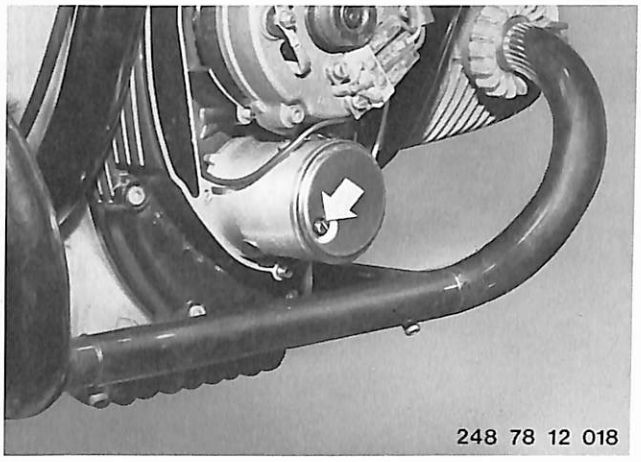

Remove engine cover after loosening the socket head screws. Unscrew slotted head screw on spark trigger cap and remove cap (arrow).

■

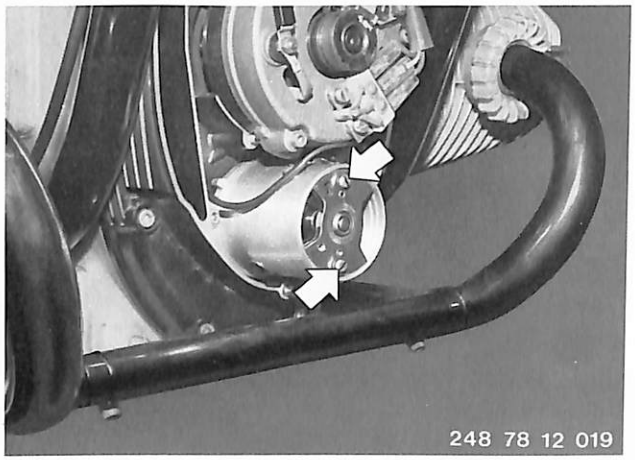

Unscrew the two slotted head screws (arrows) for support bracket and remove bracket.

■

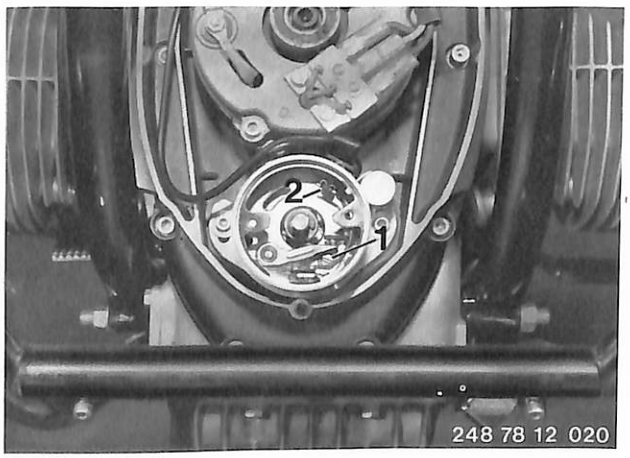

Unscrew fillister head screw (1), pull off flat female plug (2) and pull cut entire contact breaker point.

■

Troubleshooting Ignition System

Condition	Cause	Correction
Engine will not start or stops	Points burnt or dirty	Replace points
Engine power drops	Dwell angle incorrect	Adjust dwell angle
Engine will not pick up speed	No centrifugal control	Check or replace centrifugal governor
Engine starts, but stops again	Break or short in capacitor	Replace capacitor
Engine misfires – high fuel consumption	Ignition lead defective Spark plug end cap defective Resistors defective	Replace ignition lead Replace spark plug end cap Replace resistors

Troubleshooting Ignition System (1981 Models)

Starter turns, but engine does not start; fuel system okay

yes

Connect voltmeter between ignition coil term. 15 and ground. Turn ignition on. Voltage should be same as battery voltage.

no → Break in connecting wire.
Eliminate break.

yes

Check voltage drop. Pull off wire on ignition coil term. 1. Then connect term. 1 with ground (max. 1 min. due to danger of overheating ignition coil). Max. voltage drop betw. battery + and ignition coil term. 15 = 1.5 V.

no → Check wires and connections of ignition lock, emergency off switch, ignition coil and control unit including ground wire for voltage drop.
Eliminate defect.

yes

Check power supply to control unit.
Push back cap on plug (do **not** pull off plug). Check voltage on term. 4 against term. 2. Voltage should be same a battery voltage with ignition on. Voltage value okay?

no → Check wires from ignition lock to control unit for breaks.
Check 3-pin plug of ignition wire harness on main wire harness, repairing if necessary.

yes

Check power supply to spark trigger. Turn ignition off. Connect voltmeter on control unit plug term. 5 and 3. Voltage should be at least 5 V. Voltage value okay?

no → Pull off 7-pin plug on control unit. Pull term. 5 wire out of plug and reconnect plug. Connect ammeter (range in mA) on disconnected term. 5 wire and control unit plug term. 4. Turn ignition on. Replace control unit when measured current is between 3 and 20 mA.
Replace magnetic barrier when measured current is less than 3 mA or more than 20 mA.

yes

Turn ignition on. Check control unit function. Disconnect spark trigger. Hold center pin of 3-pin plug from wire harness on ground briefly several times. Each ground contact should produce a spark on spark plug.

no →

Check resistance of ignition coils:
Single coil:
Primary 0.67 – 0.77 ohm
between term. 15 and 1.
Secondary 3.7 – 5.3 k-ohms
between term. 15 and 4.
Double coil:
Primary 1.15 – 1.32 ohms
between term. 15 and 1.
Secondary 7.5 – 9.15 k-ohms
between term. 4a and 4b.
Resistance values okay?

yes

no

Replace ignition coil.

Check ignition leads and spark plugs.
Parts okay?

yes

no

Repair high voltage parts.

Replace control unit.

yes

Check contact of 3-pin plug (ignition trigger) for moisture or strong oxidation.

no →

Clean plugs and plug receptacles.
Check insulating hose for damage.

yes

Check function of ignition trigger. Turn engine until magnetic barrier is in mask opening. Voltage on control unit plug term. 6 against 2 must be same as/less than 0.4 V with ignition on.
Voltage value okay?

no →

Magnetic barrier defective.
Replace.

yes

Check trigger rotor for cracks or breaks.
Rotor okay?

no →

Replace ignition box.

yes

Check ignition timing.
Timing okay?

no →

Adjust ignition timing.

yes

Ignition system is okay!

If ignition timing „jumps" when checking with a stroboscope lamp, check centrifugal control and drive dog of ignition box.
Repair or replace if necessary.

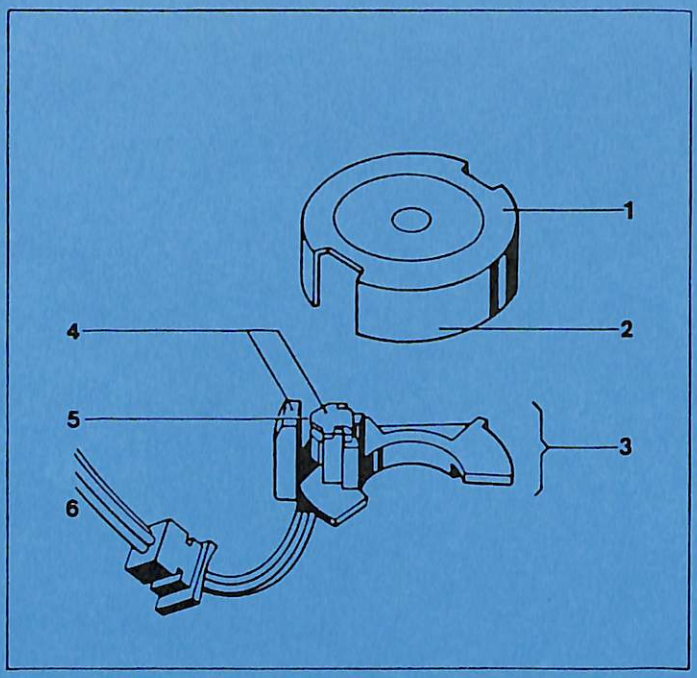

Parts of Hall Sensor:

1 Mask rotor with openings
2 Mask
3 Magnetic barrier
4 Guide
5 Clearance
6 Three-wire sensor lead

Important!
Control unit switches off again 5 seconds after switching in on the ignition lock. The ignition lock must be turned off and on again for testing on terminal 1.

12 13 100 Removing and Installing One Ignition Coil

Remove and install fuel tank – 16 11 030.
Disconnect battery's ground wire at transmission.
Pull off wires from terminals „1" and „15", as well as high tension wire from ignition coil.
Unscrew mounting screws with a socket wrench.

Installation Note! Don't forget the ground connection at front ignition coil mounting point.

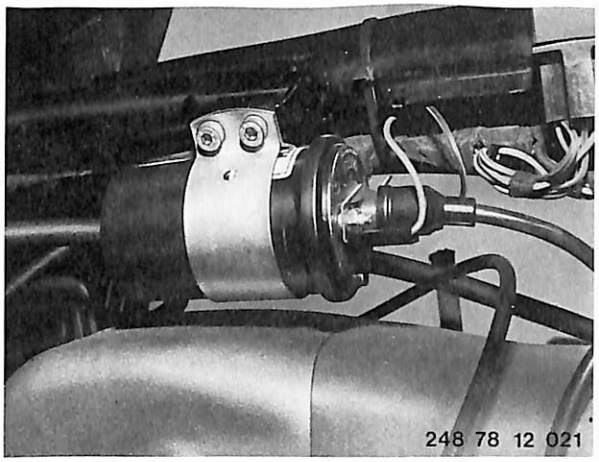

12 13 100 Removing and Installing Double Ignition Coil 1981 Models

Pull ignition leads (arrows) out of ignition coil and also pull off wires on terminal 1 (1) and 15 (2).

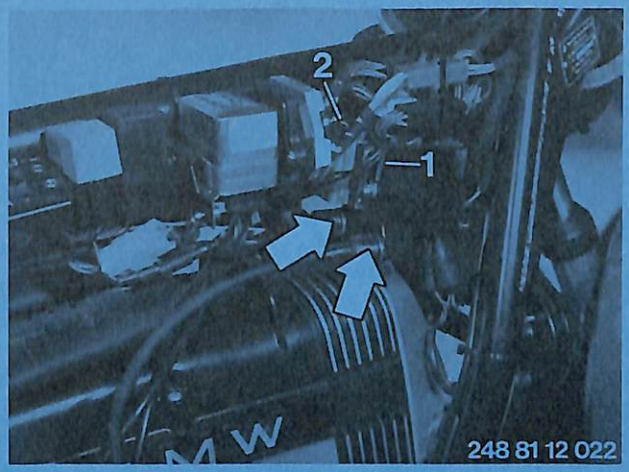

Unscrew mounting screws (arrows) for double ignition coil and take off ignition coil.

12 14 010 Removing and Installing Control Unit

Remove and install fuel tank 16 11 030.
Pull off multiple-pin plug on control unit.

Remove and install regulator for alternator 12 32 000.
Unscrew mounting bolts (arrows) of control unit and take off control unit.

Installation:
To avoid corrosion and consequently poor thermal transition, coat mating surfaces between control unit and cooler with Curil K2.

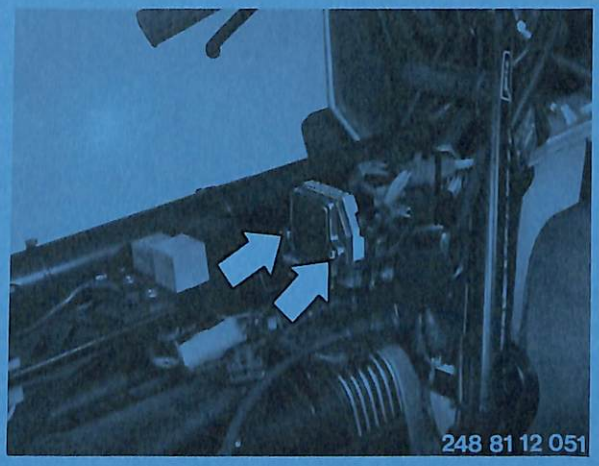

12 14 025 Removing and Installing Cooler

Remove and install fuel tank 16 11 030.
Remove and install control unit 12 14 010.
Unscrew cooler mounting bolts and take off cooler.

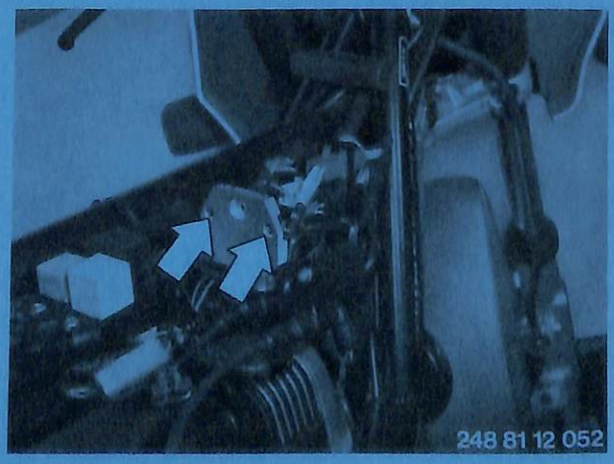

12 31 009 Checking Alternator, Diode Carrier and Regulator Cutout

The pictures shows the layout of the alternator, diode carrier and regulator.

Important! Only disconnect wires between the battery, alternator and regulator when engine has been stopped. If battery is charged in motorcycle with a battery charger, disconnect plus and minus leads from battery.

The battery charge indicator lamp is used for initial exciting of alternator.

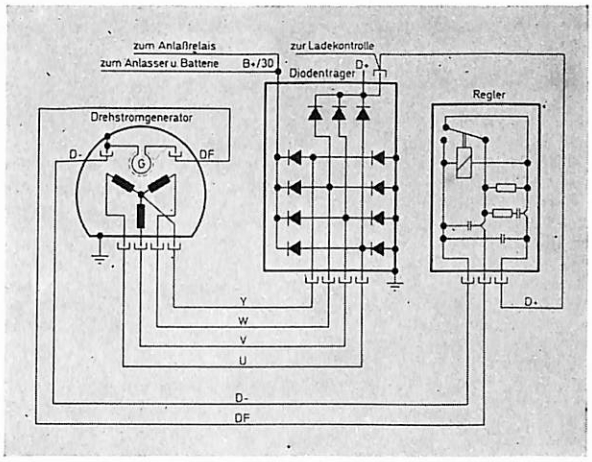

■

To check regulator, pull off B + (black wire) from diode carrier with engine stopped. Connect voltmeter between B + and D−. Start engine. Voltage should be 13.5 . . . 14.2 volts shortly after the beginning of regulation.

To check the charging current, install an ammeter (range: 15 . . . 20 A) in line B +. Turn on electrical equipment or connect a rheostat, allowing loads up to 13 amperes, parallel to battery.

Run engine at 4000 rpm. Adjust max. amperage on rheostat. Read regulating voltage at load from voltmeter. Refer to Specifications for values.

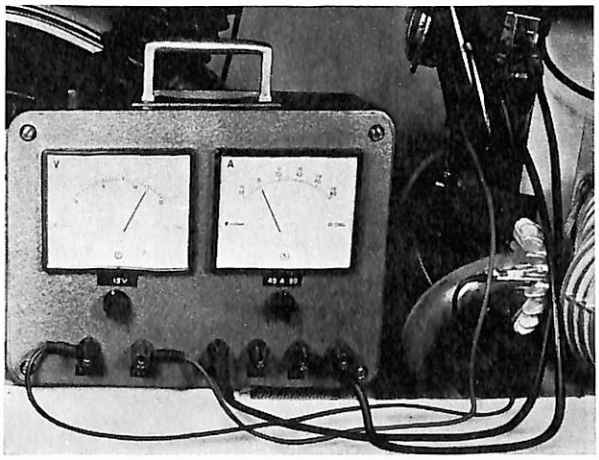

■

The voltage difference can be measured direct between D+ and B+ with a voltmeter (range: approx. 3 V). A difference in voltage up to 0.5 V means a defect in the regulator. The defect will be in the diode carrier when difference in voltage is 1.5 . . . 4 V.

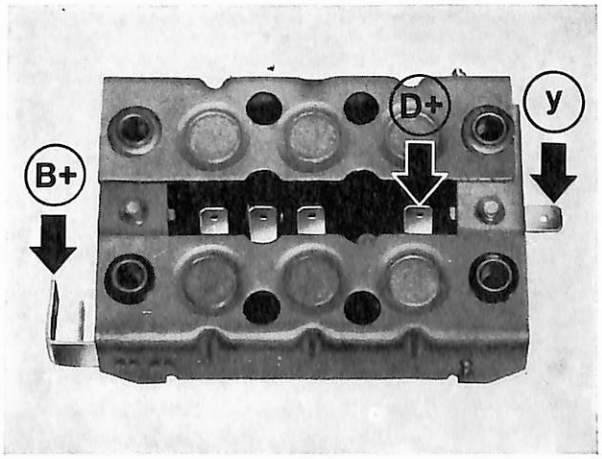

■

12 31 019 Fast Testing Alternator with Regulator

Fuel tank removed – 16 11 030.

Test should only be made when battery charge indicator lamp is on continuously while engine is running.

Pull off multiple plug from regulator with engine stopped. Bridge blue wire D+ and blue/black wire DF.

Start engine and run at approx. 1000 . . . 2000 rpm. Regulator is defective, if battery charge indicator lamp goes out immediately.

Alternator is defective, if battery charge indicator lamp glimmers or continues to burn bright.

■

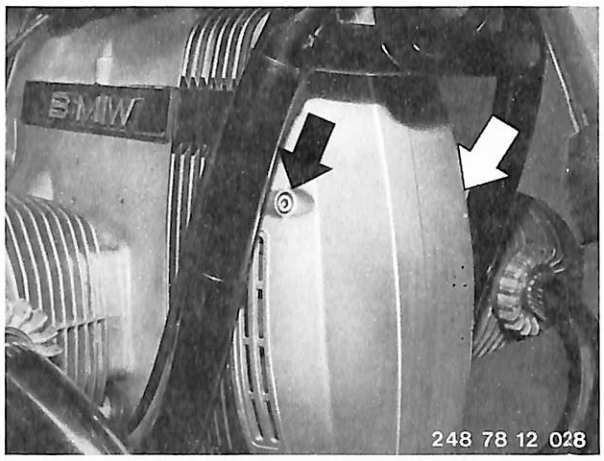

12 31 020 Removing and Installing Alternator

Engine removed (11 00 050) or installed.
Take off engine cover after unscrewing the 3 socket head screws.

■

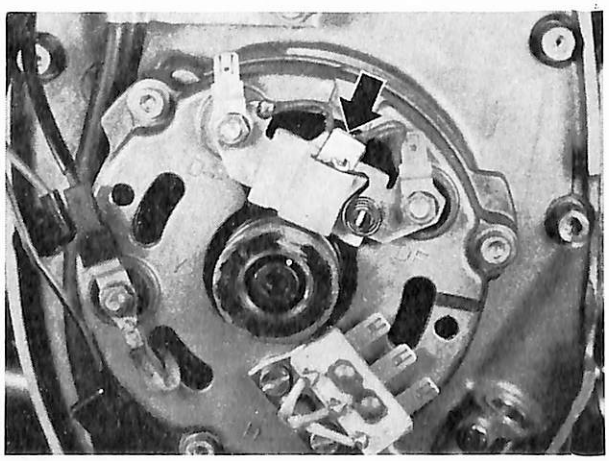

Pull off three-pin flat male plug from pole housing. Pull up carbon brushes a little and hold in this position with springs.

■

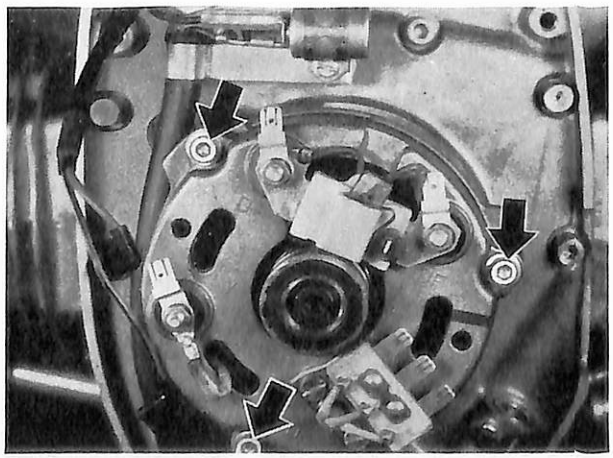

Unscrew the three socket head screws from pole housing and remove pole housing.

■

Unscrew rotor mounting screw and press off rotor from end of crankshaft with special tool, BMW No. 12 3 600.

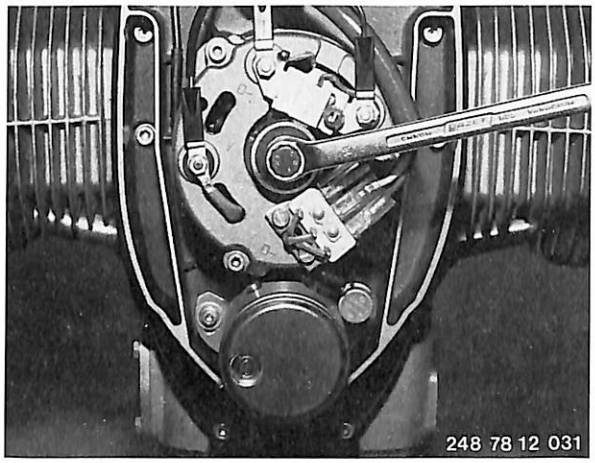

12 31 212 Overhauling Alternator

Remove and install alternator – 12 31 020.

Unscrew 2 nuts from inside of pole housing. Pull off brush holder with carbon brushes. If carbon brushes have to be replaced, be careful that solder does not run into copper leads when soldering (arrow).

Install insulators on staybolts of brush holder.
Install brush holder in pole housing, not forgetting the insulating washers.

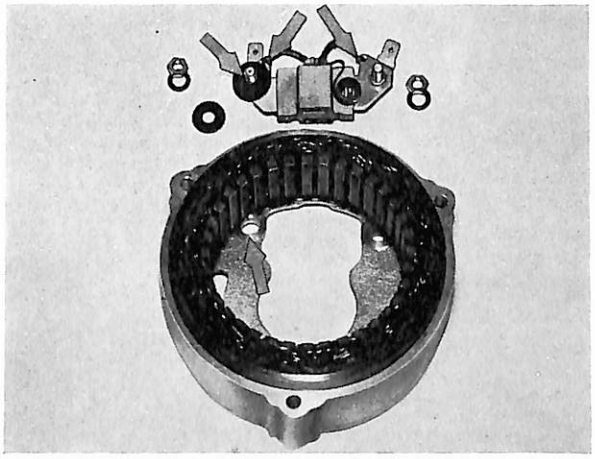

12 31 689 Checking Field Coil and Rotor

Overhaul alternator – 12 31 212.

Check ground of field coil with 40 V AC, making 3 measurements.

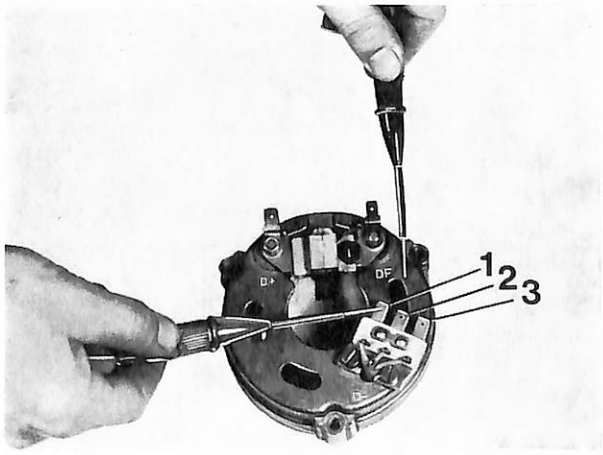

Check resistance between phase outlets alternately. Refer to Specifications for values.

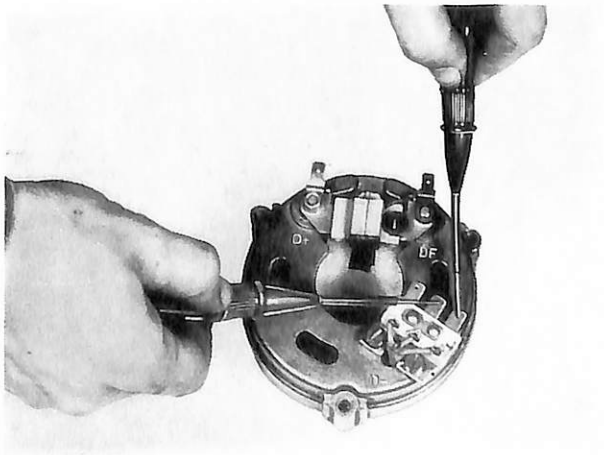

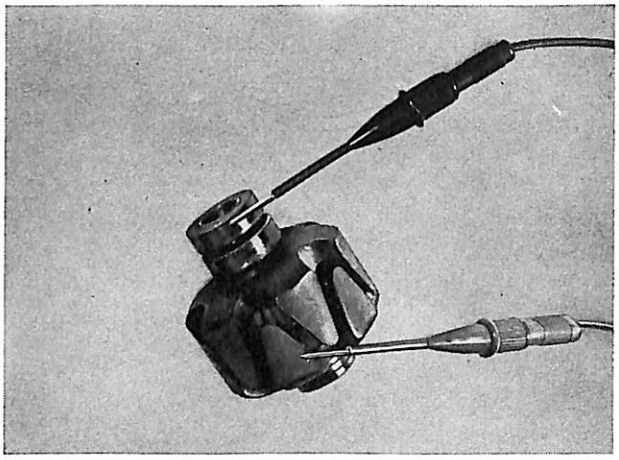

Check ground of removed claw-type rotor with 40 V AC.

■

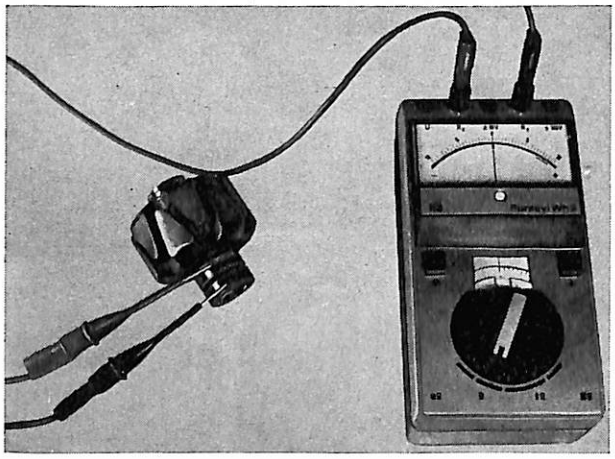

Check exciter coil with ohmmeter.

■

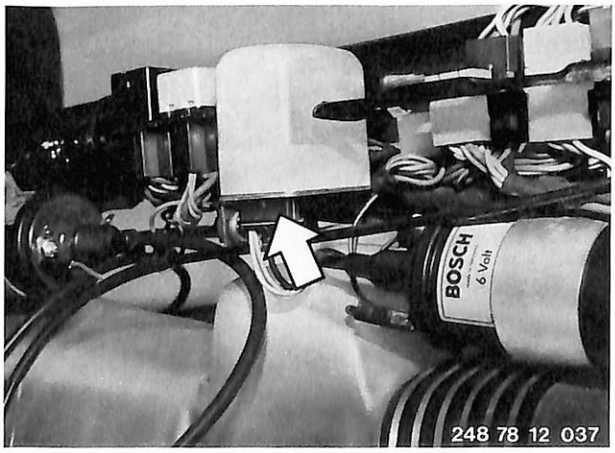

12 32 000 Removing and Installing Regulator Cutout

Remove fuel tank – 16 11 030.
Disconnect ground wire from battery. Pull off plug (arrow) and remove regulator after unscrewing both socket head screws.

■

Trouble-shooting – alternator

Fault	Cause	Remedy
Noise from alternator	Carbon brushes squeaking	Skim sliprings, renew carbon brushes
Telltale lamp glows at half intensity when engine is running	Poor cable contact	Check cables and connections
	Defective regulator	Renew regulator
	Defective carbon brushes	Renew carbon brushes
	Defective rectifier diode, or short to earth (ground)	Renew rectifier diode
	Short to earth (ground) in stator	Renew stator
	Partial short to earth (ground) in rotor	Renew rotor
Battery emitting large amounts of gas	Poor contact between regulator and alternator	Check cable connections between regulator and alternator
Telltale lamp burns at half or full intensity when engine is running	Defective regulator	Renew regulator
	Break or short-circuit in supply leads	Check cables and connections
	Defective carbon brushes	Renew carbon brushes
	Defective rotor winding	Renew rotor
	Break in exciter circuit	Check cable connections
	Diode or diode board defective	Check diode and diode board, renew if necessary
	Short to earth (ground) at cable D+/61	Rectify short or renew cable
Telltale lamp does not come on when engine is started	Defective bulb	Install a new 3 Watt bulb
	Break in cable 61	Rectify break
Telltale lamp does not come on when engine is stopped but ignition switched on	Defective bulb	Install a new 3 Watt bulb
	Battery flat	Recharge battery
	Battery defective	Renew battery
	Cable detached or defective	Renew cable or tighten terminals
	Defective regulator	Renew regulator
	Short circuit at positive diode in alternator	Disconnect charge cable at once to avoid flat battery; have alternator repaired
	Worn carbon brushes	Renew carbon brushes
	Oxide coating on sliprings, break in rotor winding	Have alternator repaired

12 41 009 Checking Starter in Motorcycle

Check battery charge condition, see Specifications for values.

Engage 5th gear and operate brake pedal for testing. Operate starter 2 to 3 seconds. Starting voltage must not drop below 8 volts with load and should be identical in voltmeter positions 1 and 2. If not, ground connection on engine or battery is insufficient. Also read power input on ammeter; see Specifications.

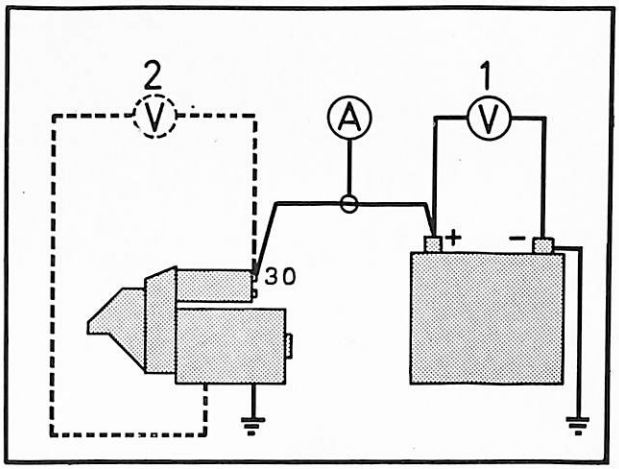

Important!
Should engine stall with gear engaged, it is possible to restart engine without disengaging gear by pulling the clutch.

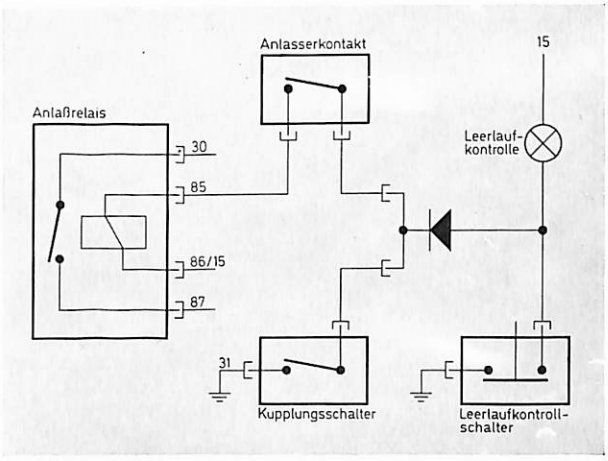

12 41 020 Removing and Installing Starter

Disconnect ground from battery.
Remove starter cover toward right side after unscrewing both socket head screws.

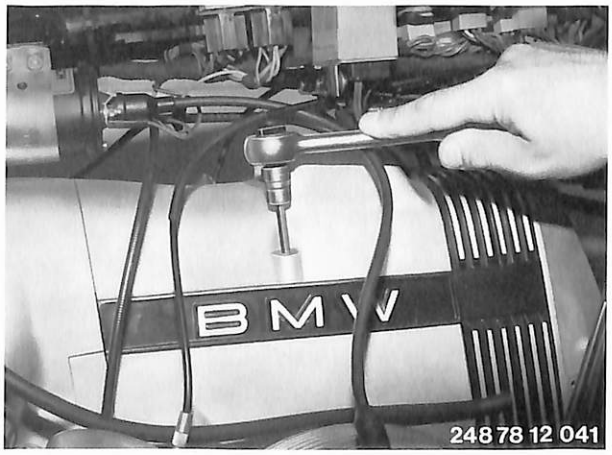

Disconnect engine vent hose on vent dome and pull out of air cleaner housing.
Beginning with 1981 models, remove air cleaner housing upper section and air filter cartridge.

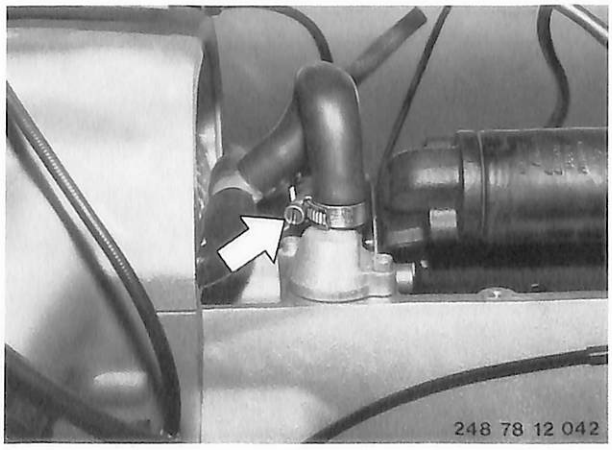

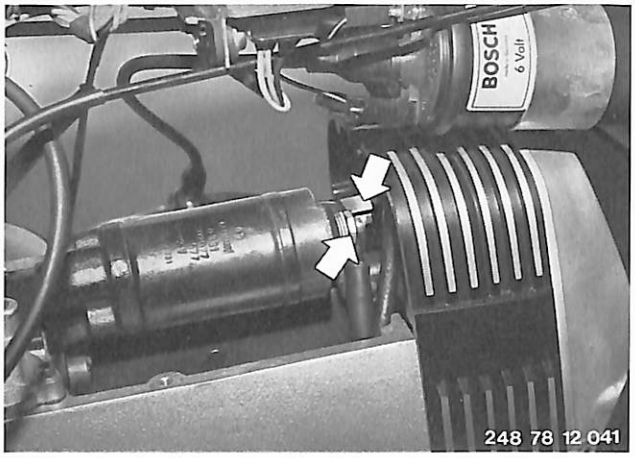

Disconnect wires (arrows) from starter.

■

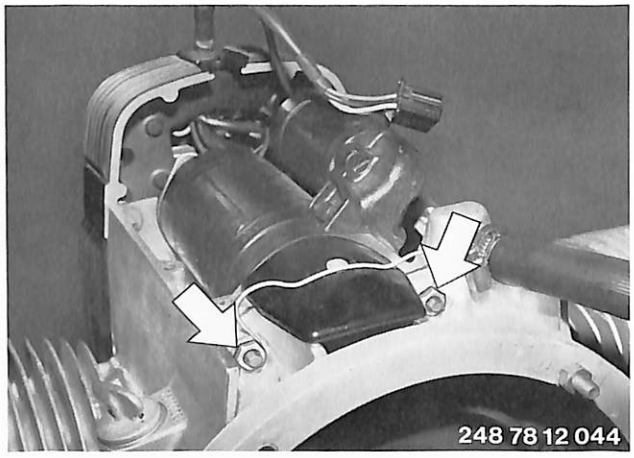

Unscrew rear starter mounting screws (arrows).

■

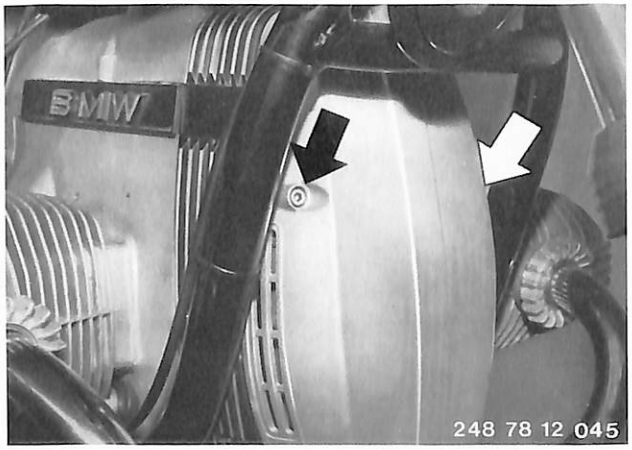

Take off engine cover after unscrewing both socket head screws.

■

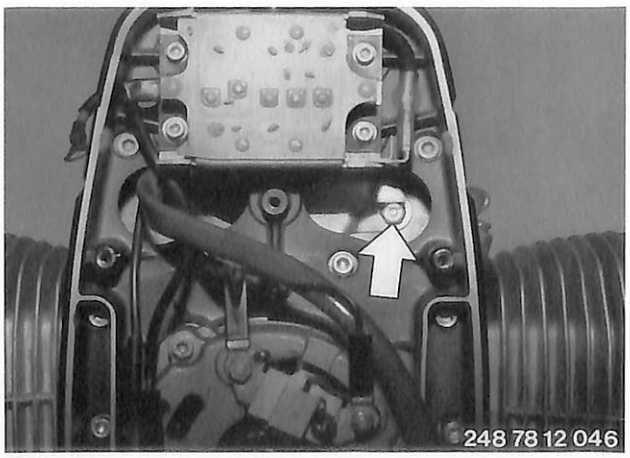

Unscrew hexagon head screw (arrow) with a socket wrench.

Remove engine vent hose – 11 15 101.

Remove starter from guide forward.

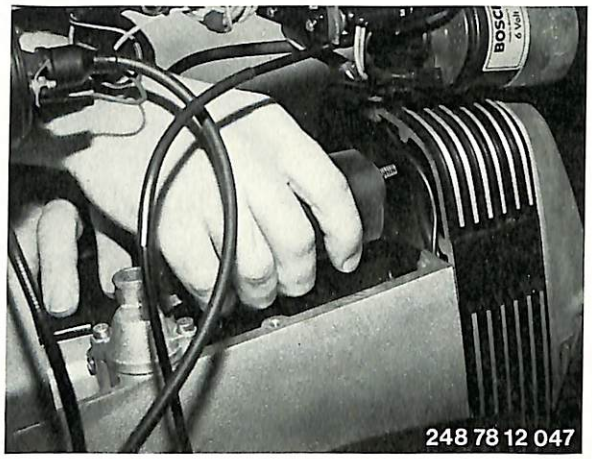

12 41 513 Disassembling and Assembling Starter

Remove and install starter – 12 41 020.

Unscrew wire for exciter coil.
Detach solenoid.
Disengage connecting lever.

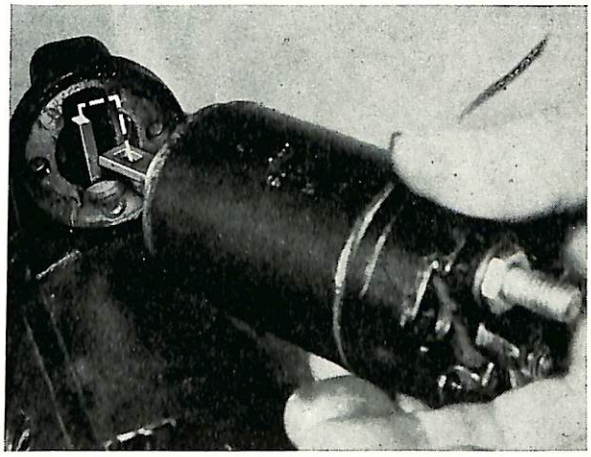

Take off dust cap.
Remove lockwasher, shim and seal.
Unscrew pole housing screws.
Pull off cap.

Installation Note! Take up armature axial play, see Specifications.
Check commutator bearing.

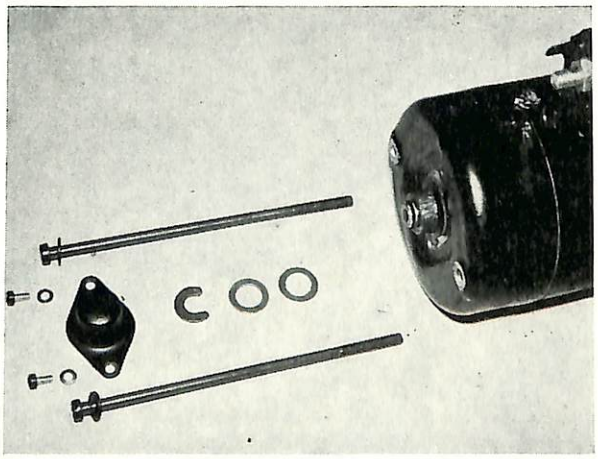

Lift out plus carbon brushes and remove carbon brush holder.

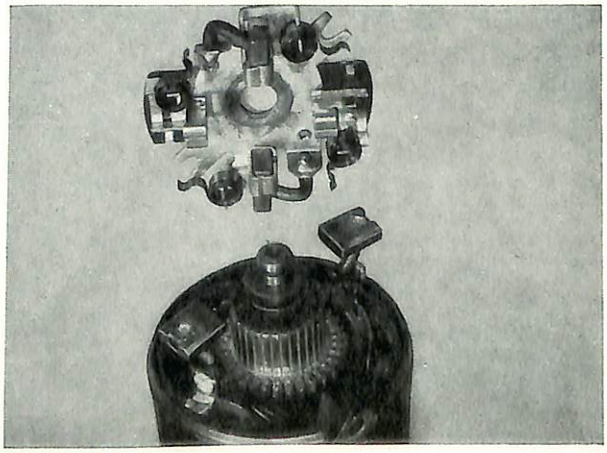

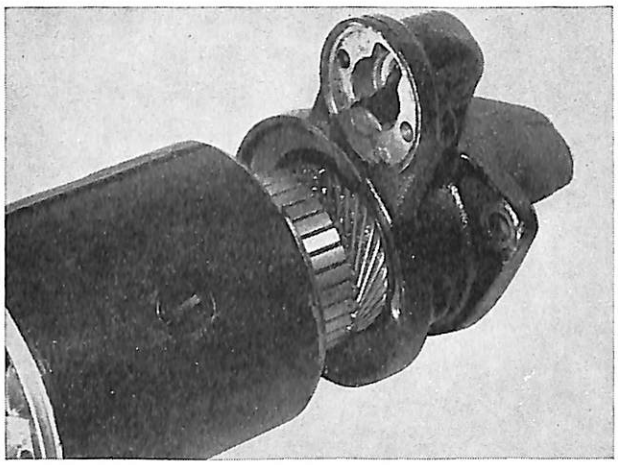

Detach pole housing from drive bearing.

■

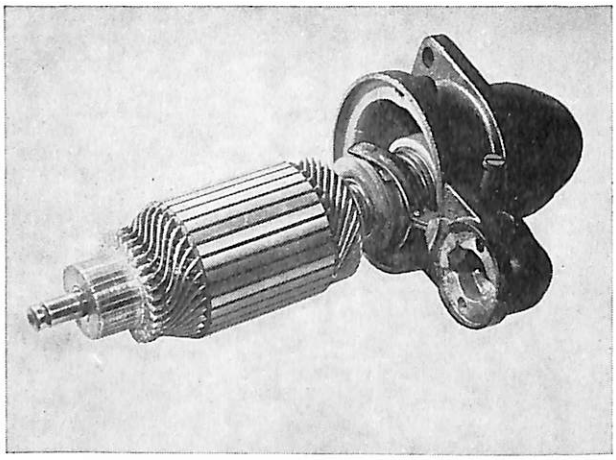

Unscrew bearing bolt for connecting lever.
Pull out armature with connecting lever.

■

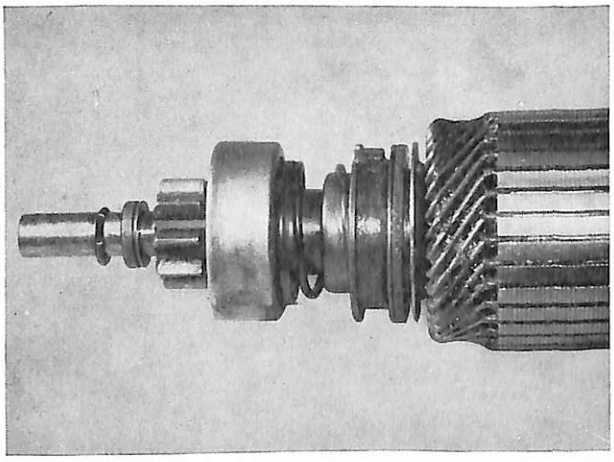

Press back thrust ring.
Remove circlip.
Pull off starter gears.

Installation Note! Coat threads and engaging ring with Bosch Ft 2 v 3 silicone grease.

Pull thrust ring over circlip.

■

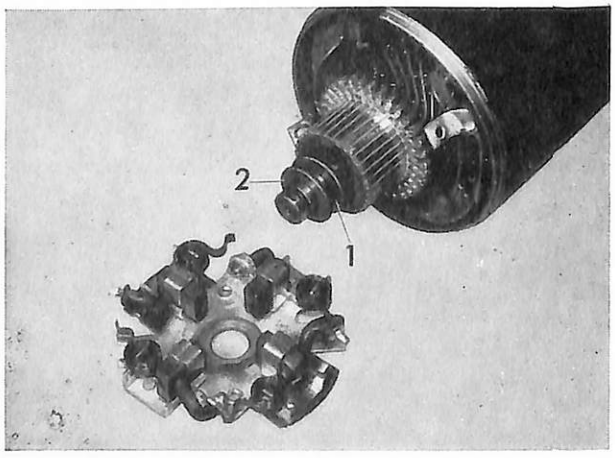

12 41 541 Replacing Carbon Brushes

Disassemble and assemble starter – 12 41 513.

Unsolder old and solder new carbon brushes at exciter coil and carbon brush holder.

Installation Note! Washer (1) on armature, insulator (2) first.

■

12 41 602 Overhauling Starter

Disassemble and assemble starter – 12 41 513.

Check armature and field coil with a 220 volt test lamp. Touch test prods against commutator and set of plates. Lamp comes on if grounded; replace armature.

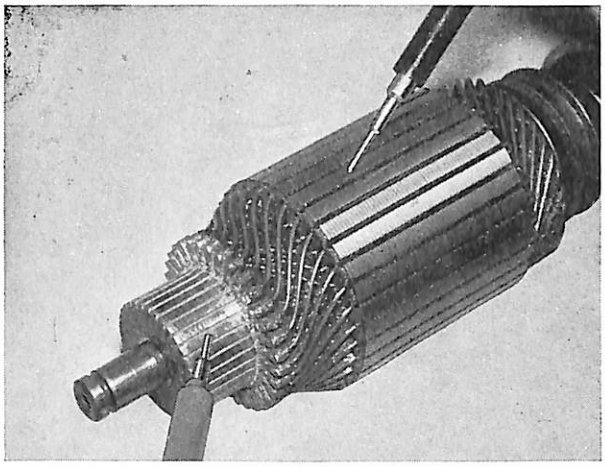

Install ammeter (range: 60 amps) in circuit and touch out commutator from plate to plate briefly. Test voltage: 2 . . . 4 volts. Instrument needle deflection should be equal between separate plates.
Serious deviation indicates a break; replace a defective armature.

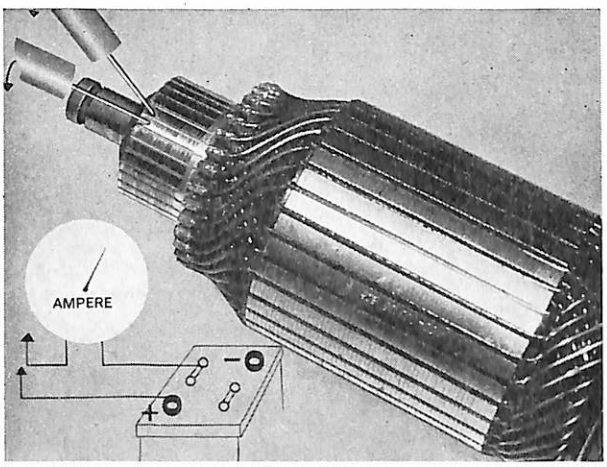

Check exciter coil for ground.

Replace burnt or melted coils.

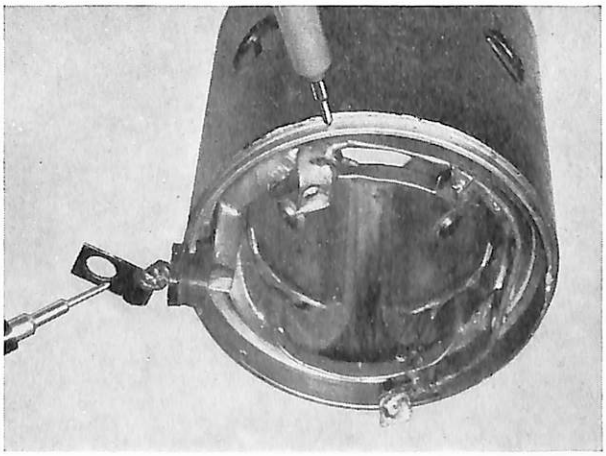

Finish grind commutator.
Commutator diameter (A) must not be less than 33 mm (1.299").

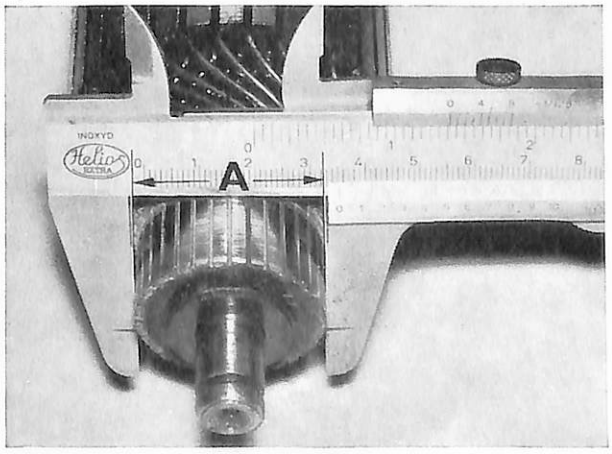

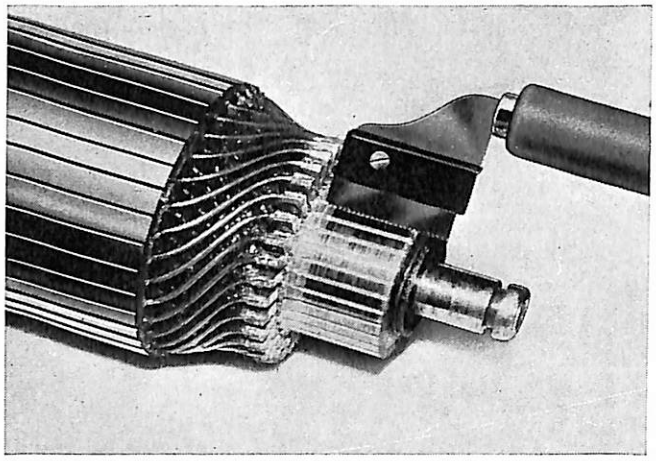

Undercut commutator plates and remove cut burrs with emery cloth. Insulation should be 0.5 mm (0.020") deeper than plates.

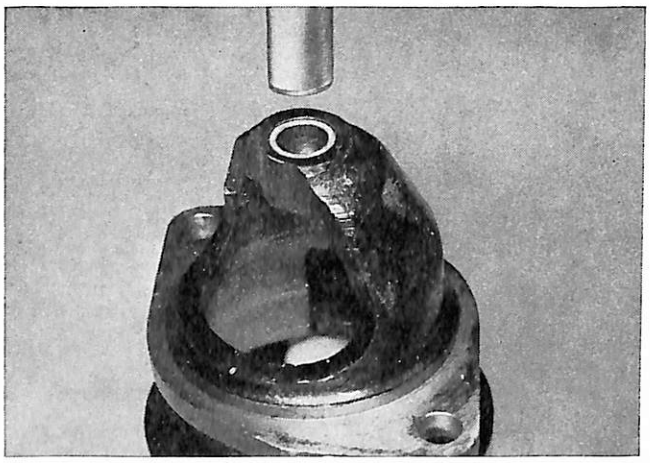

Press out bushing, if worn.

Installation Note! Prior to installation, soak new bushing in engine oil for at least 1/2 hour. Press in flush.

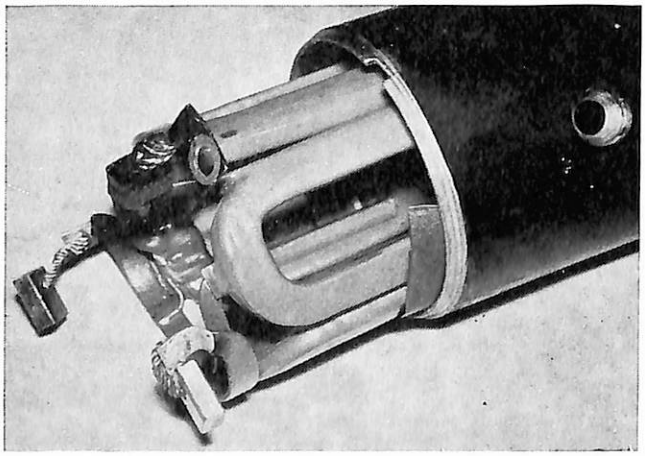

12 41 701 Replacing Exciter Coil

Disassemble and assemble starter – 12 41 513.

Mark position of pole shoes for reinstallation in same position. Unscrew the four pole shoe screws. Remove pole shoe and exciter coil from pole housing.

Installation Note! Align pole shoe to be parallel with longitudinal axis before tightening pole screws to final tightness.
Place paper insulating strips between exciter coil and pole housing.

Fauld finding on starter

Fault	Test method	Remedy
Starter fails to turn when starter button is operated	Switch on light. a) Light does not burn. Battery dead. Battery feed interrupted. b) Light burns, becoming gradually dimmer as starter is actuated. c) Light burns but extinguishes immediately starter is actuated. Oxidized battery terminals or earth connection. d) Light burns normally. Bridge terminals 50 and 30 on the starter. The starter turns. Ignition/starter switch defective or input leads interrupted. e) Light burns normally. Solenoid switch actuates, starter fails to turn. Bridge with an appropriate lead from the battery positive pole to terminal 30 on the starter. Starter turns. Solenoid switch contact fouled or scorched.	a) Measure battery voltage. Recharge battery. Check battery leads and terminals. b) Recharge battery. c) Clean battery terminals or earth connection. d) Replace ignition/starter switch, remedy interruption. e) Replace solenoid switch.
Starter fails to turn when lead is run direct from the battery positive pole to terminal 30.	a) Brushes too short. b) Brushes jamming. c) Inadequate brush pressure.	a) Replace brushes. b) Release jamming. c) Replace thrust springs.
Starter turns too slowly, fails to turn engine over.	c) Commutator fouled. b) Faulty armature or energizer coil.	a) Clean commutator. b) Repair starter.
Starter runs at high speed but engine does not turn or moves only in jerks	a) Drive pinion defective b) Flywheel gear ring defective c) Drive pinion not engaging; dirty or damaged spiral track	a) Renew drive pinion b) Renew flywheel gear ring c) Have starter repaired
Drive pinion does not engage and starter runs at high speed	a) Very dirty drive pinion b) Defective coil spring in solenoid switch c) Badly damaged teeth on flywheel gear ring	a) Clean drive pinion bearings b) Renew solenoid switch c) Renew gear ring
Drive pinion engages but starter does not turn engine over	a) Roller freewheel in drive pinion is slipping	a) Renew drive pinion

13 Fuel System

Specifications		Page 13– 0/3
Specifications – 1981 models		13– 0/5
Specifications – 1983 models		13– 0/7
13 00 004	Engine idle speed and fuel/air mixture – adjust	13–00/1
13 10 004	Fuel level – check and adjust	13–10/1
13 10 009	Carburetor – clean	13–10/1
13 10 100	Carburetors, left and right – remove and install	13–10/2
13 10 370	Choke housing – remove and install	13–10/2
13 23 021	Cold start control cable (handlebar end) remove and install (1981 models)	13–23/1
13 23 061	Cold start control cable (carburetor end) – remove and install (1981 models)	13–23/1
13 23 080	Cold start control lever – remove and install (1981 models)	13–23/2
13 72 000	Air filter cartridge – remove and install	13–72/3
13 72 130	Air cleaner – remove and install (1981 models)	13–72/4

Fuel Supply

Specifications

Model	R 65
Carburetor Design	Two inclied Bing constant pressure carburetors with needle jet, vacuum valve, throttle and central lever float.
Carburetor type BING V 64/II Left carburetor Right carburetor	 64/32/203 64/32/204
Carburetor opening in mm (in.)	32 (1.260)
Main jet	140
Needle jet	2.66
Jet needle no.	46–241
Needle position	2
Choke jet dia. in mm (in.)	60 (2.362)
Choke air jet dia. in mm (in.) (choke tank vent)	2.0 (0.080)
Mixture bore dia. in rotary valve in mm (in.)	2.0/1.2/0.7 (0.080/0.047/0.027)
Idle jet	45
Idle jet dia. in mm (in.)	1.0 (0.040)
Co leval at idle speed Vol. %	$2.0^{\pm 0.5}$
Bypass bore 1 dia. in mm (in.) Bypass bore 2 dia. in mm (in.)	0.7 (0.027) 0.65 (0.025)
Float valve dia. in mm (in.)	2.5 (0.098)

Fuel Supply

Specifications

Model	R 65
Float chamber vent bore dia. in mm (in.)	4 (0.157)
Idle outlet bore dia. in mm (in.)	1.0 (0.040)
Air cleaner	One "micro star" dry air cleaner for both carburetors
Fuel System Fuel	Premium grade
Min. octane (RON) acc. to DIN 51600 MON	98 88
Fuel tank volume in ltr. (qts.)	22 (23) of which 2 (2) in reserve

For 1980 Models only!

Fuel Supply

Specifications

Model	R 65
Carburetor Design	Two inclied Bing constant pressure carburetors with needle jet, vacuum valve, throttle and central lever float.
Carburetor type BING V 64/II Left carburetor Right carburetor	 64/32/303 64/32/304
Carburetor opening in mm (in.)	32 (1.260)
Main jet	145
Needle jet	2.66
Jet needle no.	46–241
Needle position	3
Choke jet dia. in mm (in.)	60 (2.362)
Choke air jet dia. in mm (in.) (choke tank vent)	2.0 (0.080)
Mixture bore dia. in rotary valve in mm (in.)	2.0/1.2/0.7 (0.080/0.047/0.027)
Idle jet	45
Idle jet dia. in mm (in.)	1.0 (0.040)
Co leval at idle speed Vol. %	$2.0^{\pm 0.5}$
Bypass bore 1 dia. in mm (in.) Bypass bore 2 dia. in mm (in.)	0.7 (0.027) 0.65 (0.025)
Float valve dia. in mm (in.)	2.5 (0.098)

For 1980 Models only!

Fuel Supply

Specifications

Model	R 65
Float chamber vent bore dia. in mm (in.)	4 (0.157)
Idle outlet bore dia. in mm (in.)	1.0 (0.040)
Air cleaner	One "micro star" dry air cleaner for both carburetors
Fuel System Fuel	Premium grade
Min. octane (RON) acc. to DIN 51600 MON	98 88
Fuel tank volume in ltr. (qts.)	22 (23) of which 2 (2) in reserve

Specifications 1981 Models

Model	R 65	R 65 LS
Carburetor Design	Two inclied Bing constant pressure carburetors with needle jet, vacuum valve, throttle and central lever float.	
Carburetor type BING V 64/II Left carburetor Right carburetor	 64/32/325 64/32/326	
Carburetor opening in mm (in.)	32 (1.260)	
Main jet	145	
Needle jet	2.66	
Jet needle no.	46–241	
Needle position	3	
Choke jet dia. in mm (in.)	60 (2.362)	
Choke air jet dia. in mm (in.) (choke tank vent)	2.0 (0.080)	
Mixture bore dia. in rotary valve in mm (in.)	2.0/1.2/0.7 (0.080/0.047/0.027)	
Idle jet	40	
Idle jet dia. in mm (in.)	1.0 (0.040)	
Co leval at idle speed Vol. %	$2.0^{\pm 0.5}$	
Bypass bore 1 dia. in mm (in.) Bypass bore 2 dia. in mm (in.)	0.7 (0.027) 0.65 (0.025)	
Float valve dia. in mm (in.)	2.5 (0.098)	

Fuel Supply

Specifications 1981 Models

Model	R 65	R 65 LS
Float chamber vent bore dia. in mm (in.)	4 (0.157)	
Idle outlet bore dia. in mm (in.)	1.0 (0.040)	
Air cleaner	One "micro star" dry air cleaner for both carburetors	
Fuel System Fuel	Premium grade	
Min. octane (RON) acc. to DIN 51600 MON	98 88	
Fuel tank volume in ltr. (qts.)	22 (23) of which 2 (2) in reserve	

Air cleaner (beginning with 1980 models)

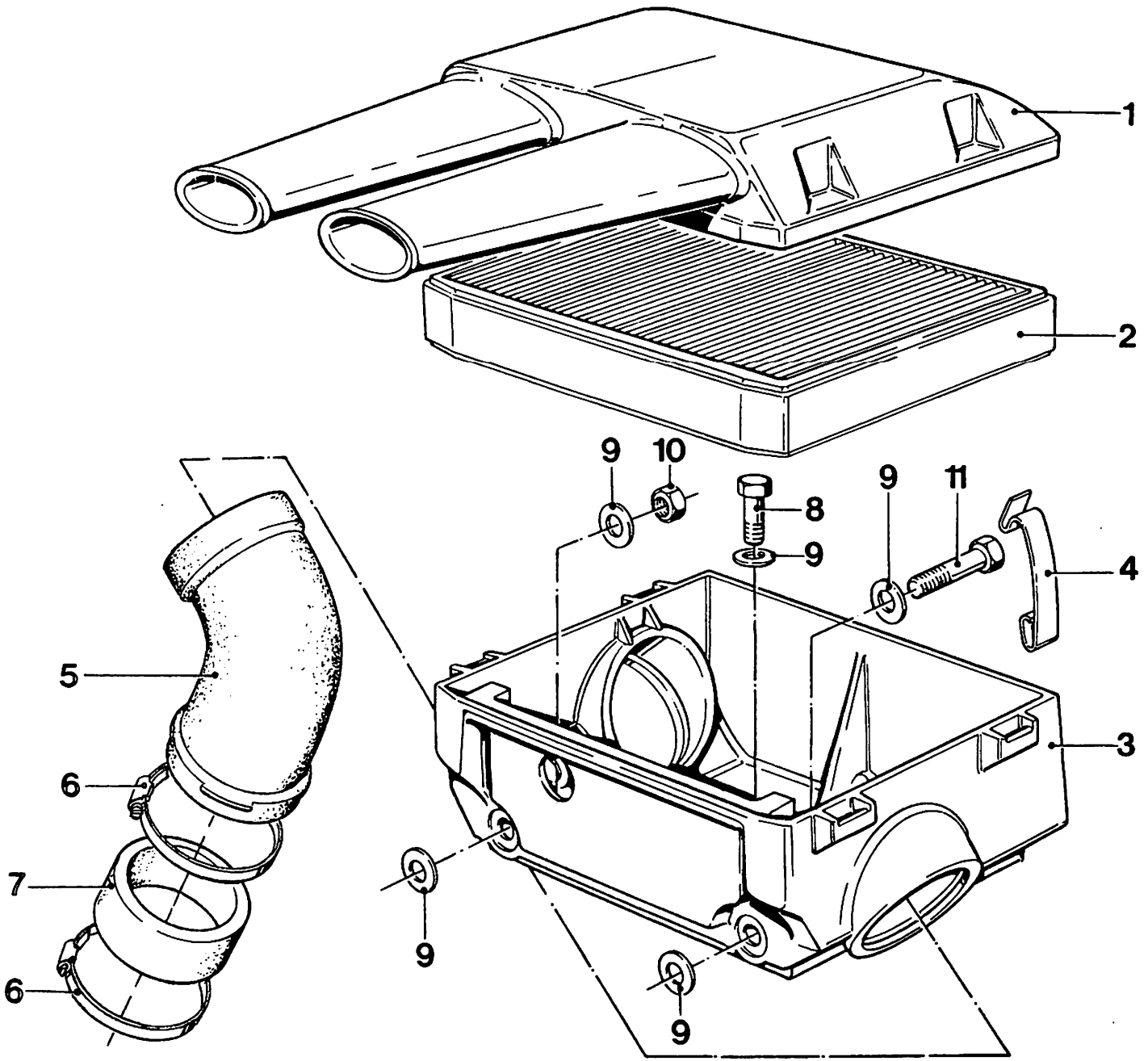

1) Air cleaner housing, upper
2) Air filter cartridge
3) Air cleaner housing, lower
4) Clamp
5) Intake line
6) Hose clamp

7) Rubber sleeve
8) Hexagon head bolt
9) Washer
10) Hexagon nut
11) Fillister head bolt

13 00 004 Adjusting Engine Idle Speed

Adjust idle speed with engine running and having operating temperature, and with throttle twist grip shut.
Refer to Specifications for idle speed.
Adjust accelerator cable play to 4 mm (0.157") provisionally, to prevent throttles from catching on cables.

Note:
The carburetors have sometimes been detached and turned to the side for more clarity in the pictures.

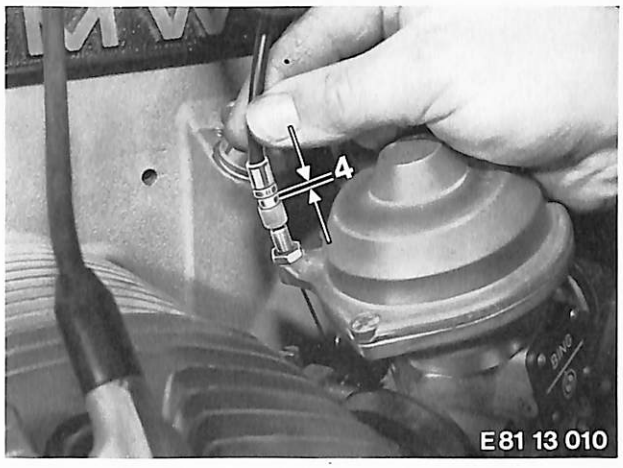

Adjust accelerator cables to basic position. Adjust choke cables that choke levers (arrow) are pressed to their final position when choke control is switched off.

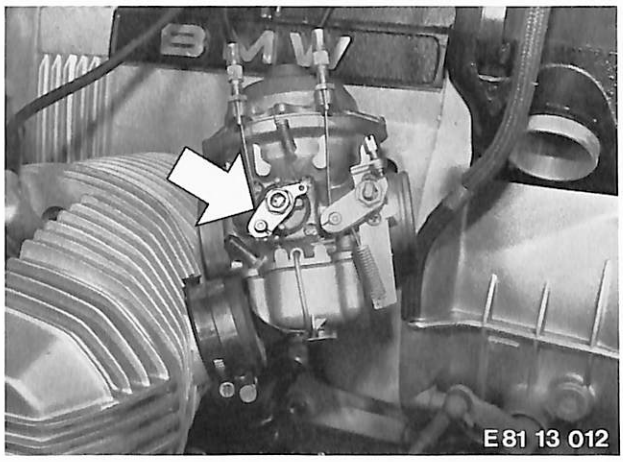

Adjust idle mixture control screw 1 and throttle stop screw 2 of both carburetors to basic position. This means tightening idle mixture control screw fully and then unscrewing it by the specified number of turns, see Specifications. Tighten throttle stop screw until it just touches stop of throttle lever, then tighten screw by one more turn.

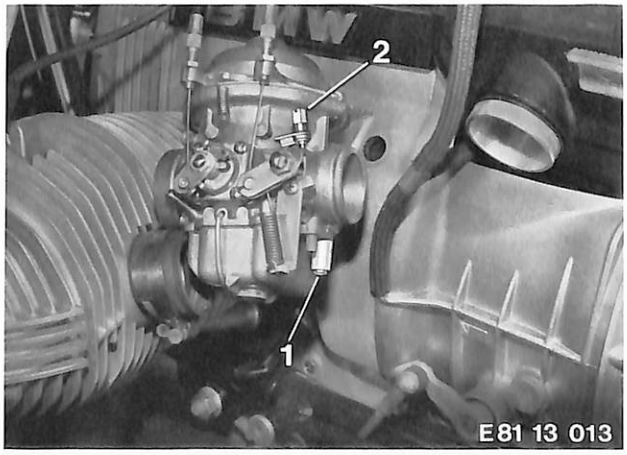

Use tester, BMW No. 13 0 700, to synchronize the carburetors. Unscrew plug (arrow) in tester connection bore and push on rubber hose from synchronizer.

Synchronize carburetors by tightening throttle stop screw and idle mixture control screw alternately.
If engine speed is still not within range of 800 to 1100 rpm, decrease or increase speed by turning both throttle stop screws anticlockwise or clockwise uniformly. Make final adjustment with idle mixture control screw!

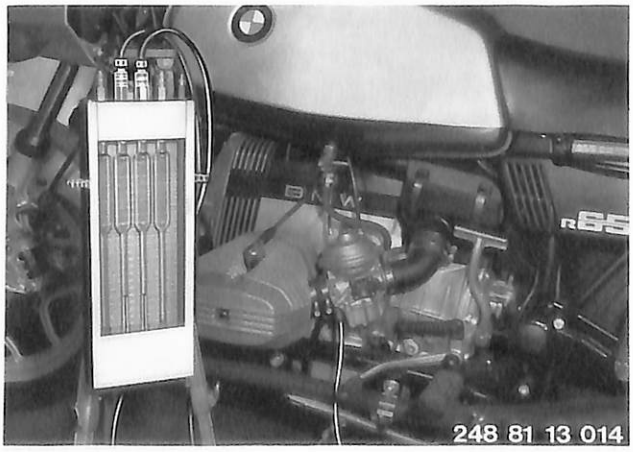

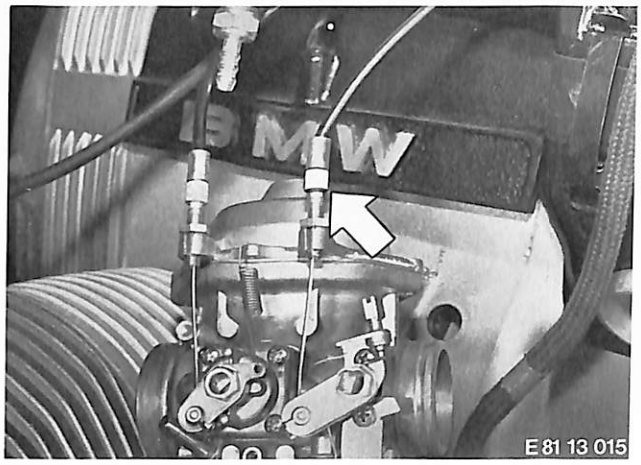

To adjust the accelerator cables, increase engine speed slightly with the throttle twist grip and check speed of each separate cylinder by pulling off the spark plug connectors alternately. Adjust accelerator cables with adjusting screw and counterlock with hexagon nut (arrow).

Never run engine of stationary motorcycle without cooling for more than 10 minutes!

13 10 004 Checking and Adjusting Fuel Level

Shut fuel valve and remove float housing on carburetor. Push up float with finger and open fuel valve. No fuel should run out. Lower float slowly. Fuel should start to run out when shaped edge of float is parallel to carburetor housing lower edge as illustrated.
Bend tongue on float suspension accordingly when fuel outlet is too early or too late.

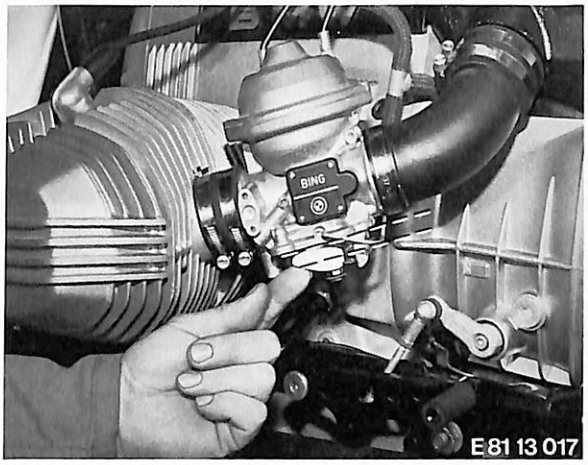

13 10 009 Cleaning Carburetors

Remove and install left and right carburetors 13 10 100.

Remove dome cover, piston with diaphragm, main jet carrier, main jet, needle jet and atomizer. Clean all parts in clean gasoline and dry jets and bores with compressed air.

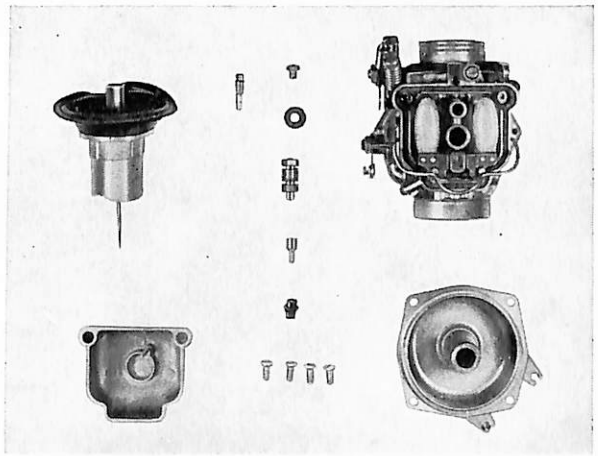

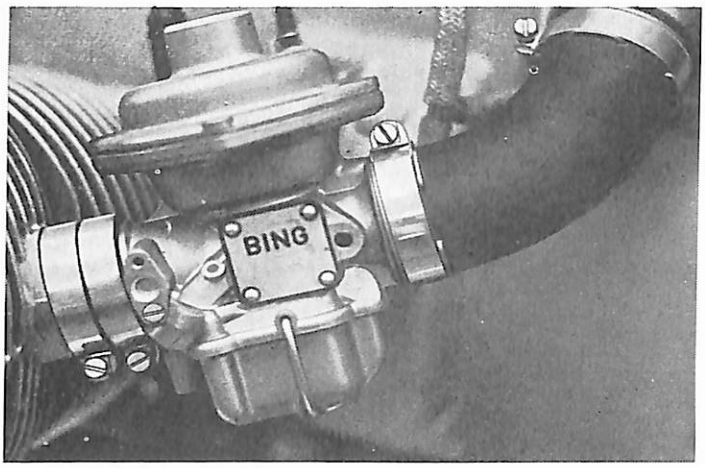

13 10 100 Removing and Installing Left and Right Carburetors

Detach or unclamp choke and accelerator cables.
Loosen straps on cylinder side and on air lines.
Push back rubber sleeve on air cleaner housing.
First take off air line and then carburetor.

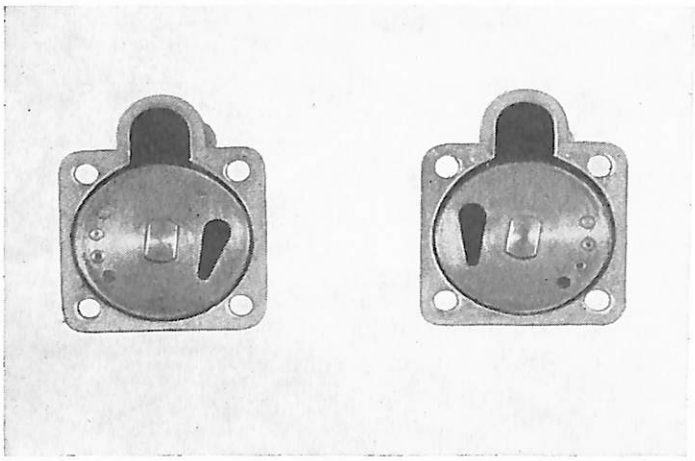

2 1

13 10 370 Removing and Installing Choke Housing

Remove and install left and right carburetors – 13 10 100.

Loosen the 4 oval head countersunk screws and take off choke/carburetor housing with rotary valve and gasket.

Don't mix up left and right choke/carburetor housings!

Pos. 1 = Left choke/carburetor housing
Pos. 2 = Right choke/carburetor housing

13 23 080 Removing and installing cold start control lever (1980 models)

Press out plastic cover with a small screwdriver, unscrew mounting bolt and remove.

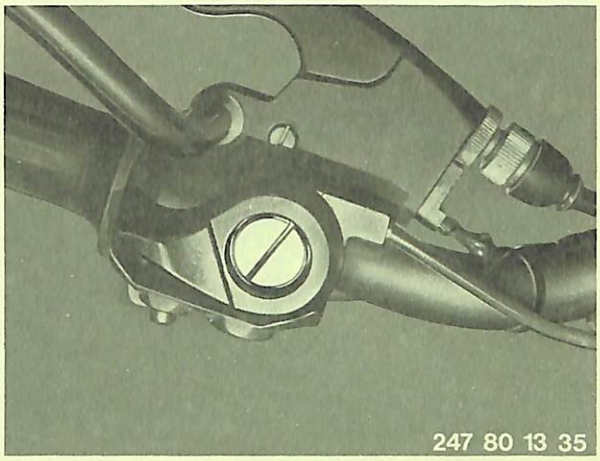

Take off lever, guiding cable through slot in housing.

Installation:

Tabs of washer must fit in slots of housing (arrows).

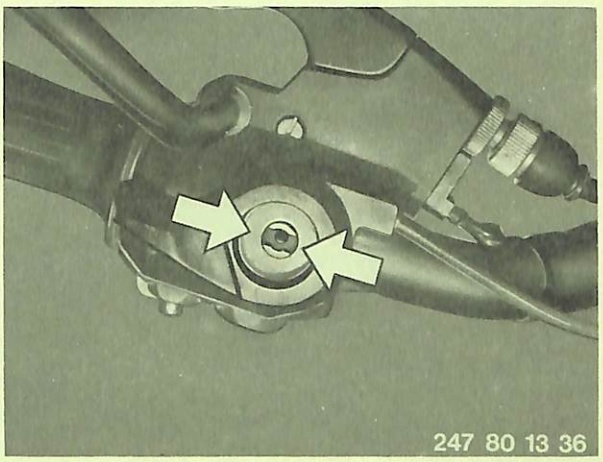

Disconnect cable at lever.

Installation:

Make sure catch plate fits properly. (arrow)

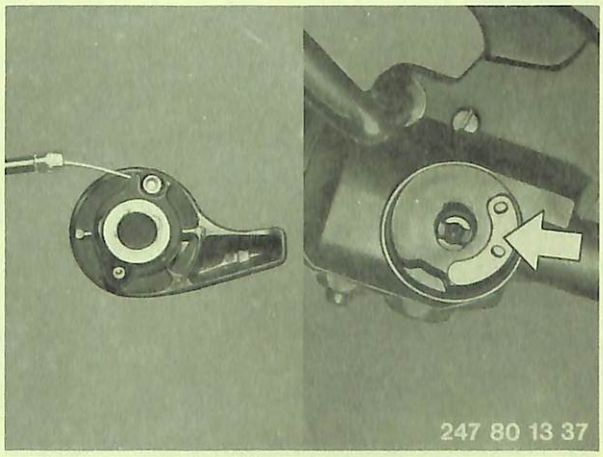

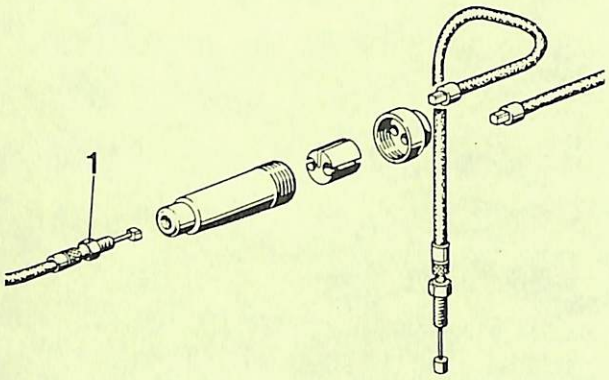

247 80 13 38

13 23 021 Removing and installing cold start control cable (front) – 1980 models

Remove and install cold start control lever 13 23 080. Unscrew locknut of adjusting screw (1) on branch and tighten adjusting screw fully.

■

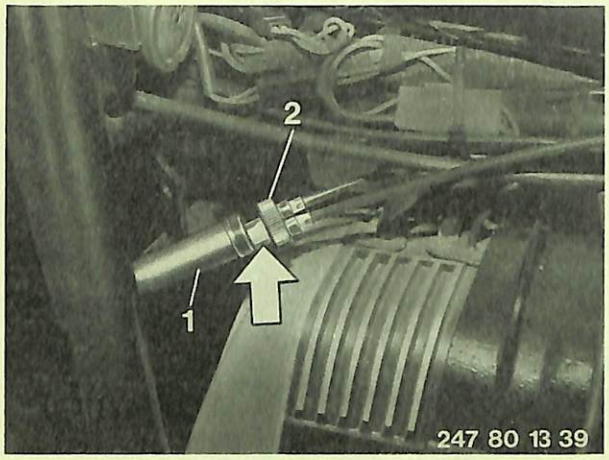

247 80 13 39

Turn sleeve of branch (1), holding the knurled part (2) tight. Disconnect cable at branch (arrow).

■

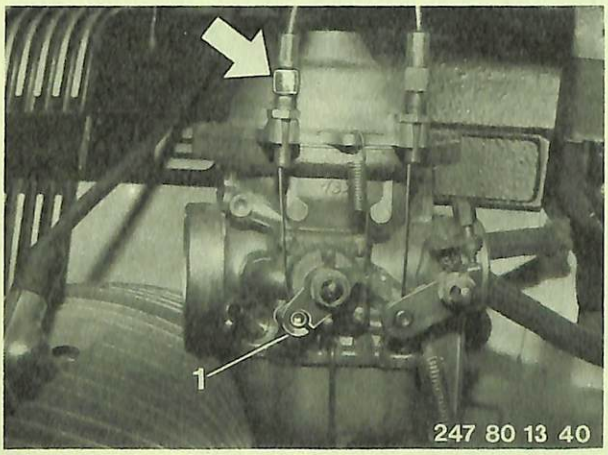

247 80 13 40

13 23 061 Removing and installing cold start control cable (carburetor) – 1980 models

Unscrew locknut of adjusting screw on carburetor and remove screw (arrow) from carburetor housing.
Disconnect cable at lever (1) of cold start control.
Disconnect cable at branch as described in 13 23 021.

■

13 72 000 Removing and Installing Air Cleaner Filter Cartridge

Remove and install fuel tank – 16 11 030.
Take off choke cover toward right after unscrewing both socket head screws and pull out engine vent hose from left half of air cleaner housing.

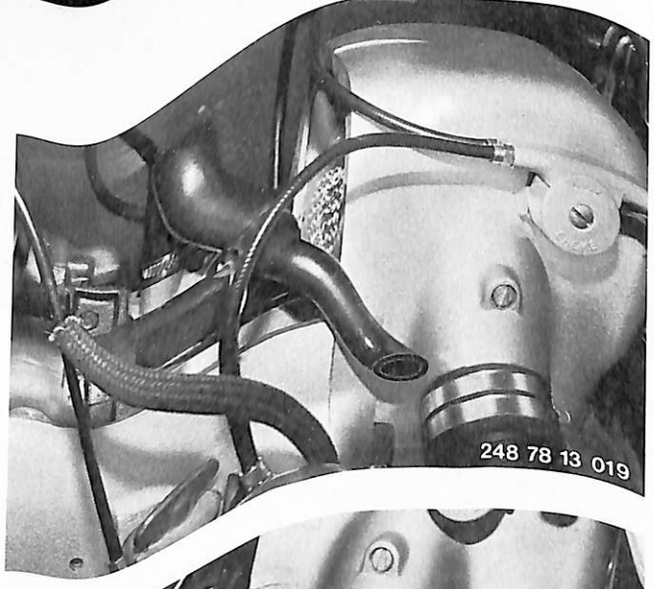

Loosen clamps from left air line (arrows) and remove air line after pushing back rubber sleeve (1).

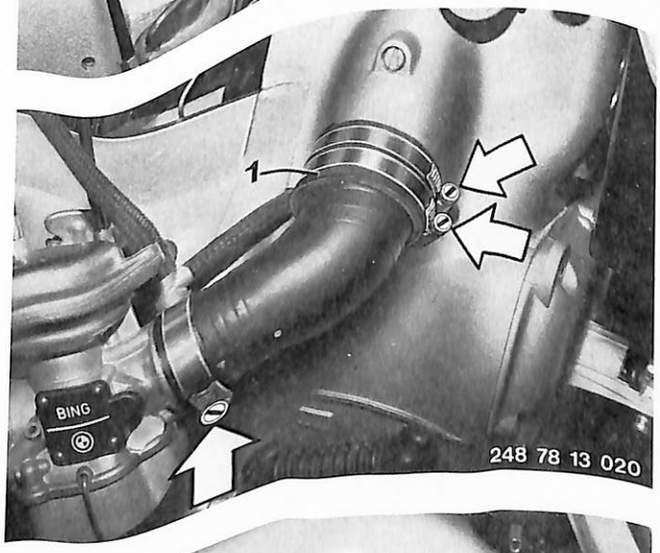

Unscrew fillister head screw (arrow) from left half of air cleaner housing and pull off housing shell.

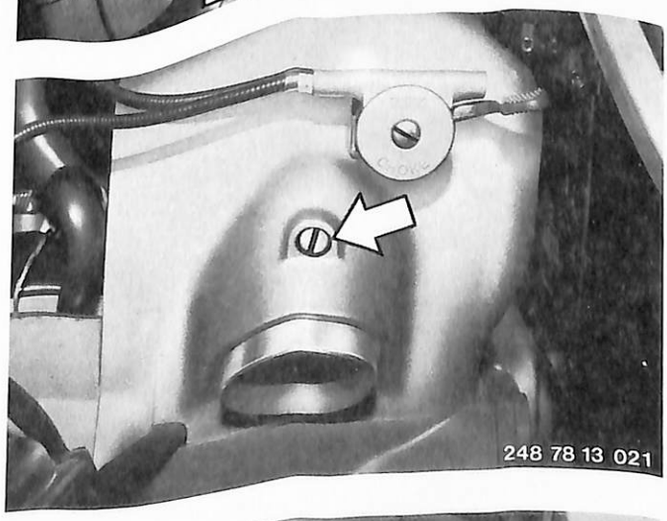

Remove filter cartridge.

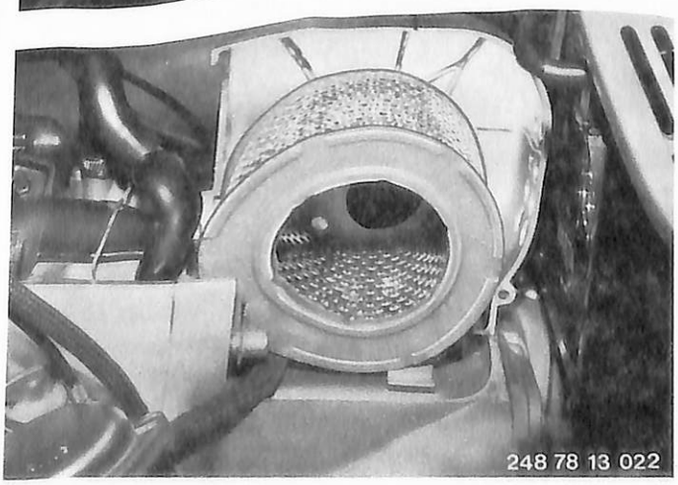

13 72 000 Removing and installing air filter cartridge (1980 models)

Press off mounting clips with a screwdriver.

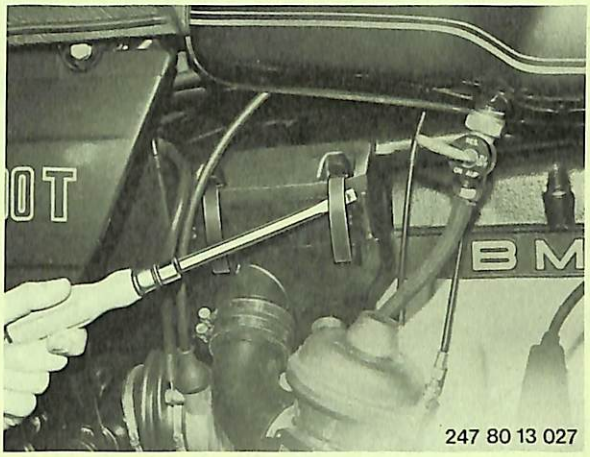

Pull out plate filter and push in the new filter. Mount air cleaner housing cover with clips again, making sure that filter fits properly.

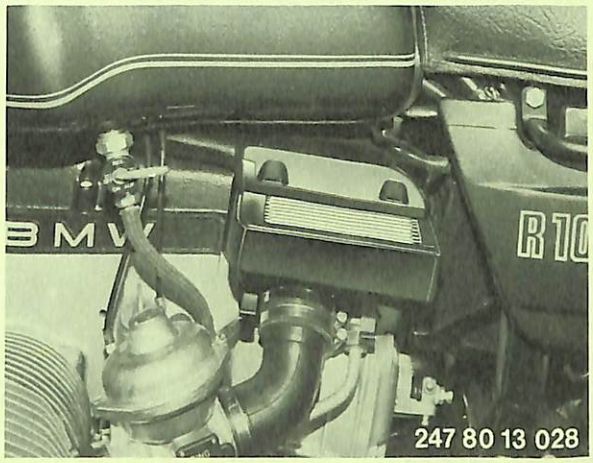

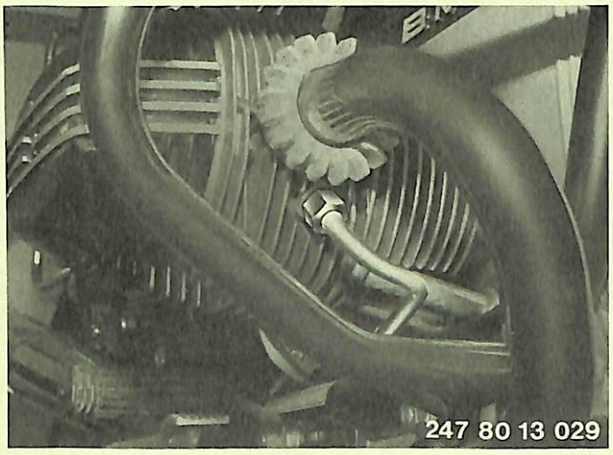

13 72 080 Removing and installing intake line (1980 models)

Unscrew coupling nuts of intake line at cylinder head and air cleaner, and remove intake line.

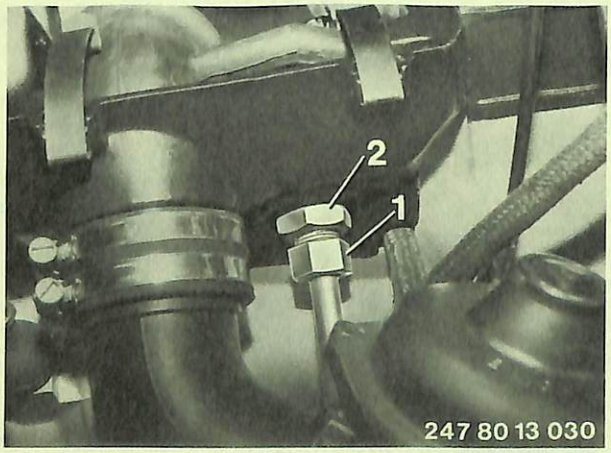

13 72 100 Removing and installing valve (1980 models)

Remove and install air cleaner 13 72 000.
Pull out air cleaner housing from above.
Unscrew coupling nut of intake line (1) and also mounting nut of valve (2).
Pull valve out of air cleaner housing.

13 72 110 Removing and installing intake neck (1980 models)

Remove and install air cleaner 13 72 000.
Loosen hose clamps on intake line, push back rubber sleeve and remove air line.

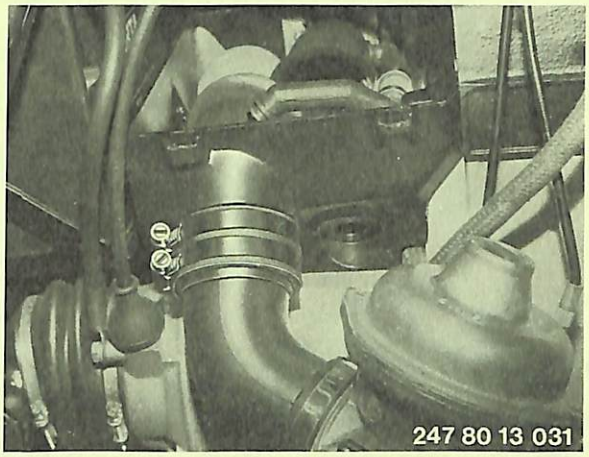

Press out adapter from inside with a screwdriver and then pull out the intake neck.

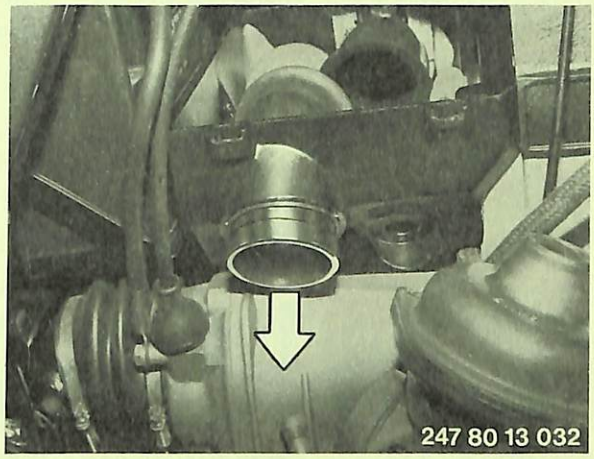

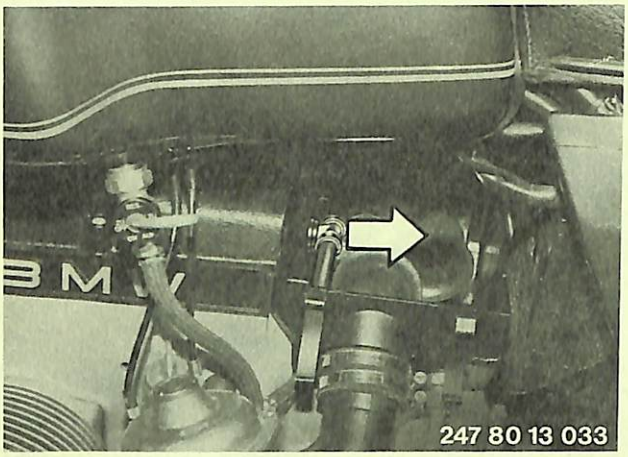

13 72 130 Removing and installing air cleaner (1980 models)

Remove air cleaner 13 72 000 and pull out air cleaner housing from above.
Remove valves 13 72 100.
Remove air lines.
Remove battery 61 21 010.
Remove battery console 61 21 100.
Pull T-adapter of crankcase breather out of air cleaner housing in direction of arrow.

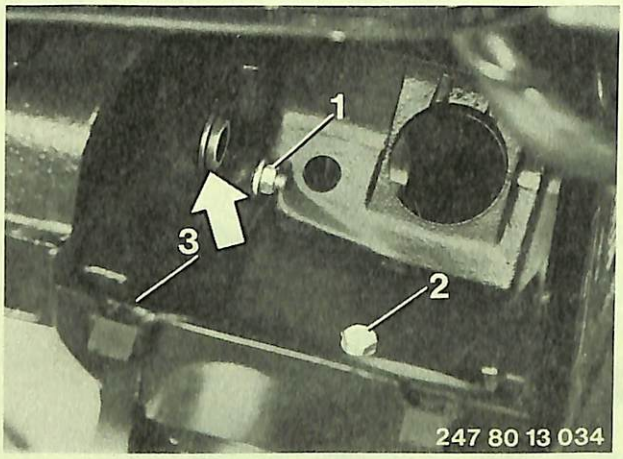

Unscrew nut (1) and bolts (2 and 3) used to mount the housing.
Press discharging line (arrow) out of the air cleaner housing.
Remove housing.

16 Fuel Tank and Lines

Specifications . . . . . Page 16– 0/3
Specifications – 1981 models 16– 0/3
16 11 030 Fuel tank – remove and install 16–11/1

Fuel Tank and Lines

Specifications

Model	R 65
Fuel tank volume in ltr. (qts.) of which in reserve in ltr. (qts.)	22 (23) 2 (2)

Fuel Tank and Lines

Specifications 1981 Models

Model	R 65	R 65 LS
Fuel tank volume in ltr. (qts.) of which in reserve in ltr. (qts.)	22 (23) 2 (2)	

Fuel Valve

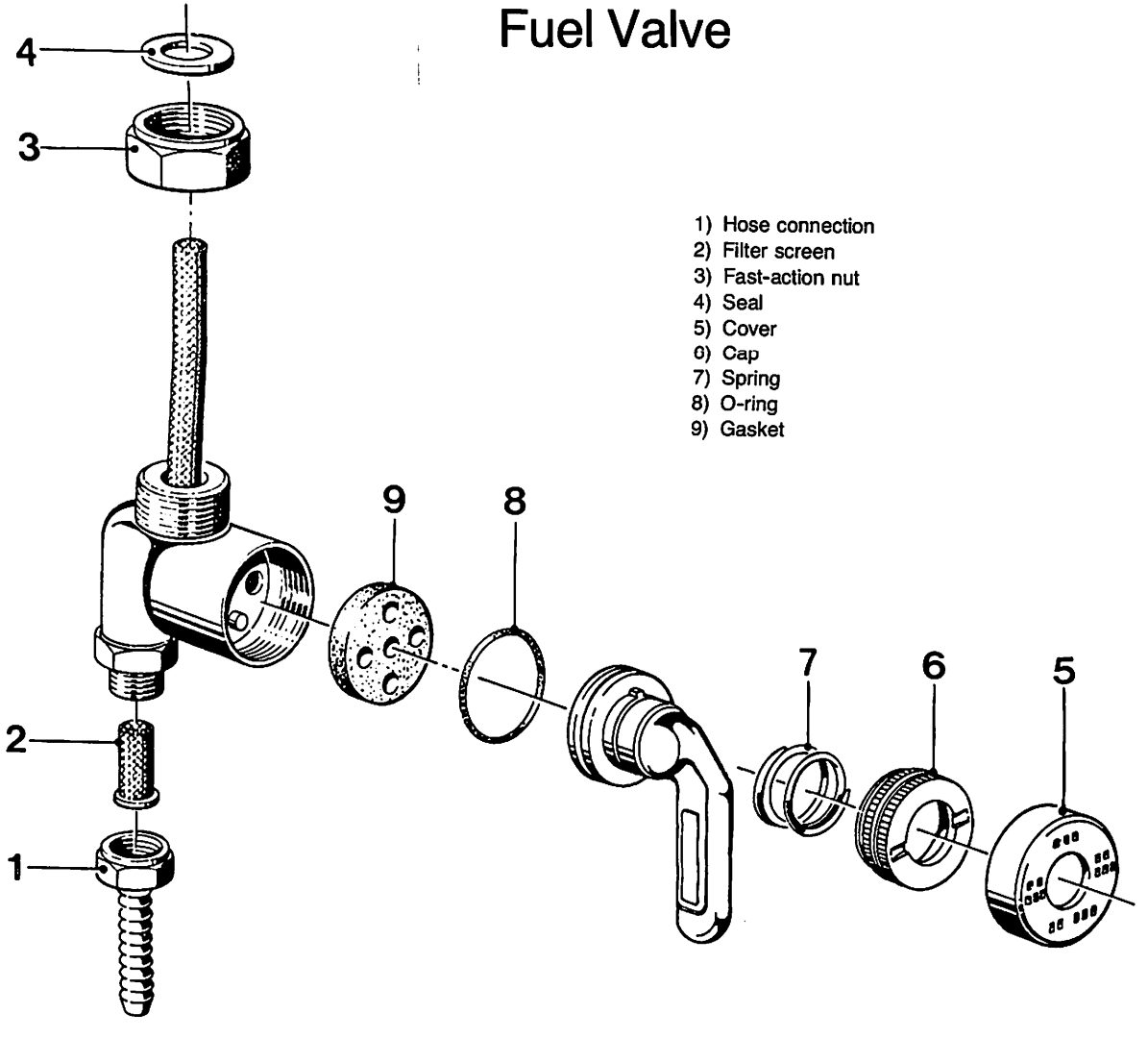

1) Hose connection
2) Filter screen
3) Fast-action nut
4) Seal
5) Cover
6) Cap
7) Spring
8) O-ring
9) Gasket

Fuel Valve

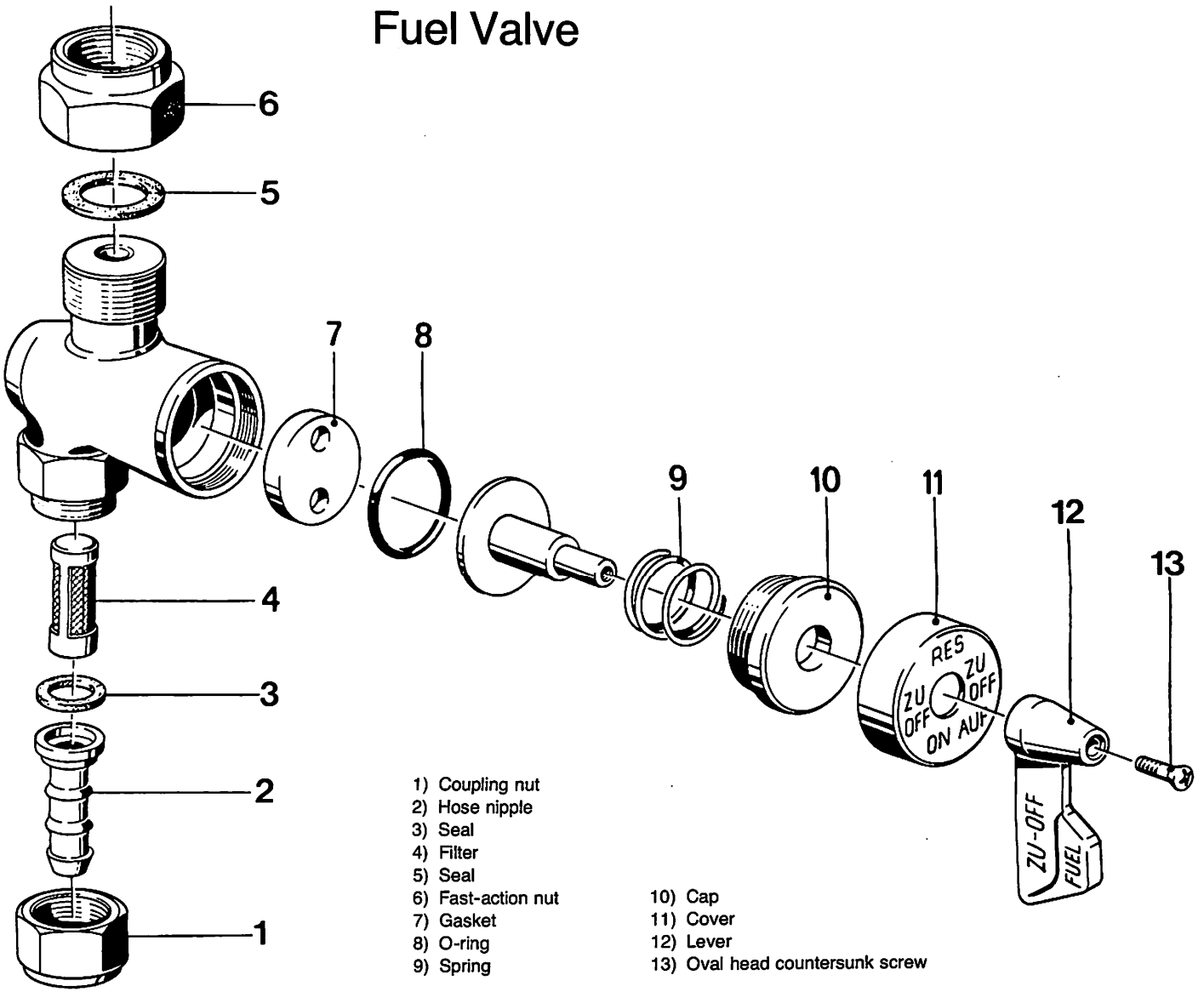

1) Coupling nut
2) Hose nipple
3) Seal
4) Filter
5) Seal
6) Fast-action nut
7) Gasket
8) O-ring
9) Spring
10) Cap
11) Cover
12) Lever
13) Oval head countersunk screw

16 11 030 Removing and Installing Fuel Tank

Shut fuel cock (1) and pull off fuel hose (2).

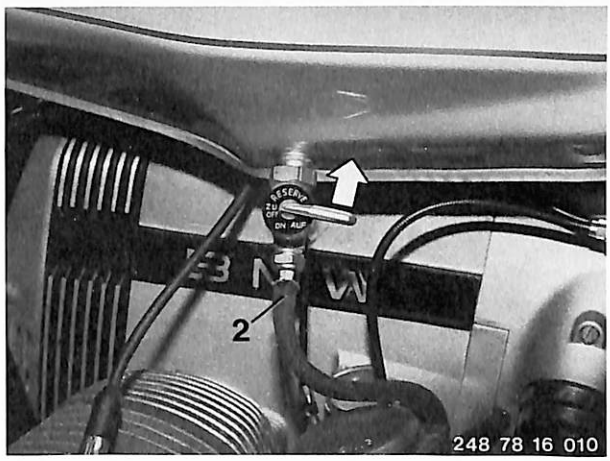

Pull off overflow line from tank at bottom left (arrow).

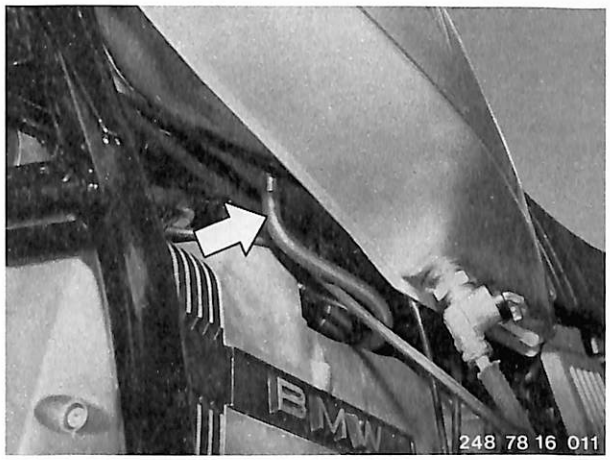

Fold up rear seat cushion and remove tool tray. Press down tank with left hand and fold bracket (arrow) forward with right hand. Pull back fuel tank slightly, lift front end and remove.

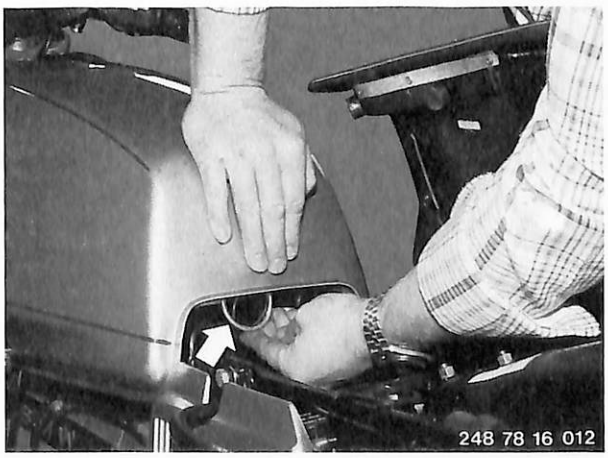

18 Exhaust System

Specifications . . . . . Page 18– 0/3
Specifications – 1981 models 18– 0/5
18 00 020 Exhaust assembly – remove and install 18–00/1
18 11 321 Muffler – replace 18–00/2

Exhaust System

Specifications

Model	R 65
Muffler dia. in mm (in.)	87 (3.425)
Exhaust pipe dia. in mm (in.)	32 x 1.5 (1.259 x 0.060)

Torque Values in Nm (ft lbs)

Face nut for exhaust	160±20 (116±14)

Tighten all other bolts and nuts to common torque values as listed in tables from bolt/nut suppliers or the new BMW Standard 60002.0.

Exhaust System

Specifications 1981 Models

Model	R 65	R 65 LS
Muffler dia. in mm (in.)	87 (3.425)	
Exhaust pipe dia. in mm (in.)	32 x 1.5 (1.259 x 0.060)	

Torque Values in Nm (ft lbs)

Face nut for exhaust	200 + 20 (145 ± 14)

Tighten all other bolts and nuts to common torque values as listed in tables from bolt/nut suppliers or the new BMW Standard 60002.0.

18 00 020 Removing and Installing Exhaust Assembly

Remove and install muffler 18 11 321.
Unscrew both exhaust nuts on cylinder heads with special wrench, BMW No. 18 0 600.

Installation:
Lubricate adapters on cylinder head with corrosion inhibition paste.

Loosen socket head bolts (arrows) on compensating pipe.

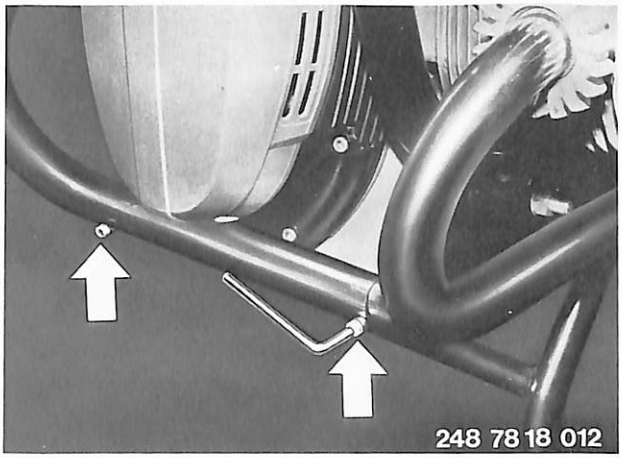

Unscrew hexagon nut on rear engine bolt and remove clamp (arrow). Loosen bolts (1) on rear compensating pipe (from 1981 models). Pull exhaust pipes out of cylinder heads and lay aside.

Installation:
Lubricate clamping surfaces and bolts with corrosion inhibition paste.

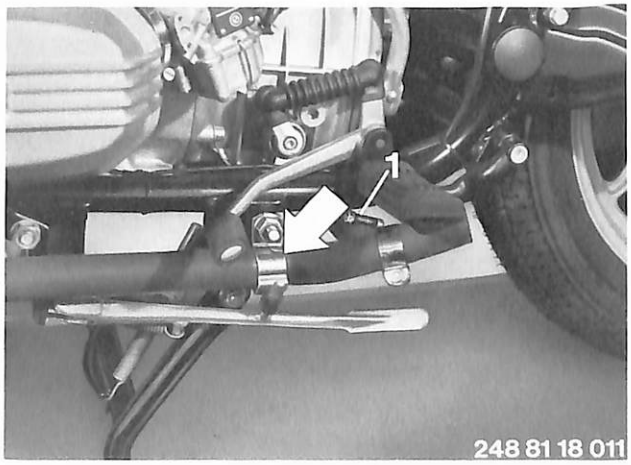

18 11 321 Removing and Installing Muffler

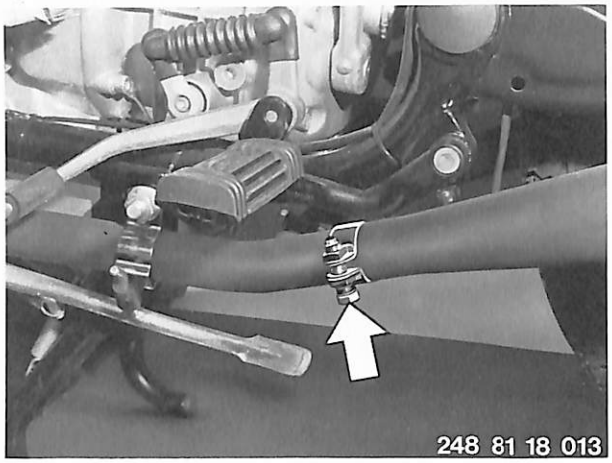

Loosen hexagon head screw on clamp and push back clamp.

■

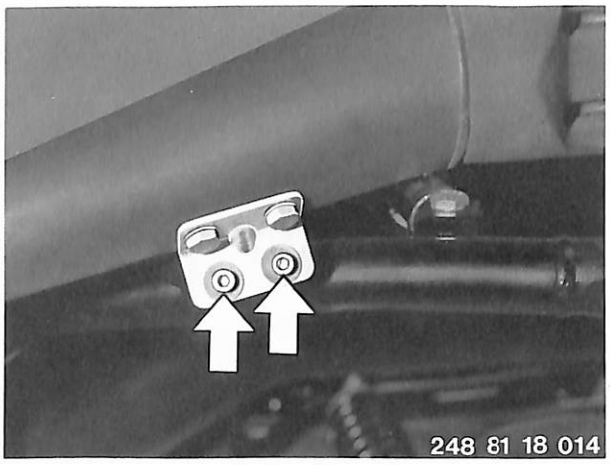

Unscrew socket head screws from frame (arrow).

■

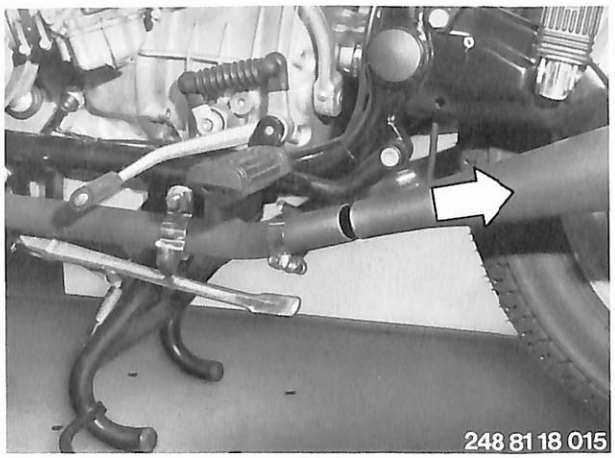

Pull off muffler toward rear.

■

21 Clutch

Specifications . . . . . Page 21– 0/3
Specifications – 1981 models 21– 0/5
21 00 004 Clutch play – adjust (1981 models) 21–00/1
21 21 000 Clutch – remove and install 21–21/1
21 21 000 Clutch – remove and install (1981 models) 21–21/3
21 51 020 Clutch release lever – remove and install 21–51/1
21 51 020 Clutch release lever – remove and install (1981 models) 21–51/3

Clutch

Specifications

Model	R 65
Type	Single plate, dry clutch with diaphragm spring
Diaphragm material thickness in mm (in.)	2.6 (0.102)
Diaphragm pressure in installed state in kp (lbs.)	180 . . . 220 (397 . . . 485)
Height of relaxed diaphragm spring in mm (in.)	15.2±0.5 (0.598±0.020)
Diaphragm spring dia. in mm (in.) (pressed flat)	163 (6.417)
Instructions for testing diaphragm spring	When placing edge of spring on measuring plate max. difference in height of spring tips is 0.3 mm (0.012") or when placing spring tips on measuring plate max. radial runout of spring edge is 0.8 mm (0.031").
Total clutch disc thickness in mm (in.) (plate and liner)	6±0.25 (0.236±0.010)
Clutch disc outside dia. in mm (in.)	160 (6.299)
Max. lateral runout of clutch disc at outside diameter in mm (in.)	0.15 (0.006)
Max. radial runout of clutch disc in mm (in.)	0.3 (0.012)
Max. radial runout of diaphragm/drive plate in mm (in.)	
Inside dia.	$61^{+0.05}_{+0.10}$ ($2.401^{+0.002}_{+0.004}$)
Outside dia.	$189^{+0.10}$ ($7.441^{+0.004}$)

Torque Values in Nm (ft lbs)

Counternut for clutch lever adjusting screw	20 . . . 23 (14 . . . 17)

Tighten all other bolts and nuts to common torque values as listed in tables from bolt/nut suppliers or the new BMW Standard 60002.0.

Clutch

Specifications 1981 Models

Model	R 65	R 65 LS
Type	Single plate, dry clutch with offset diaphragm spring	
Diaphragm spring dia. in mm (in.) (pressed flat)	163 (6.417)	
Total clutch disc thickness in mm (in.) (plate and liner)	5,5 ± 0.25 (0.216 ± 0.010)	
Clutch disc outside dia. in mm (in.)	165 ± 1 (6.496 ± 0.040)	
Clutch play on handlever (cable) mm (in.)	2 ± 0,5 (0.079 ± 0.020)	

Torque Values in Nm (ft lbs)

Counternut for clutch lever adjusting screw	20 + 2 (14 + 1)

Tighten all other bolts and nuts to common torque values as listed in tables from bolt/nut suppliers or the new BMW Standard 60002.0.

Clutch – Release Bearing

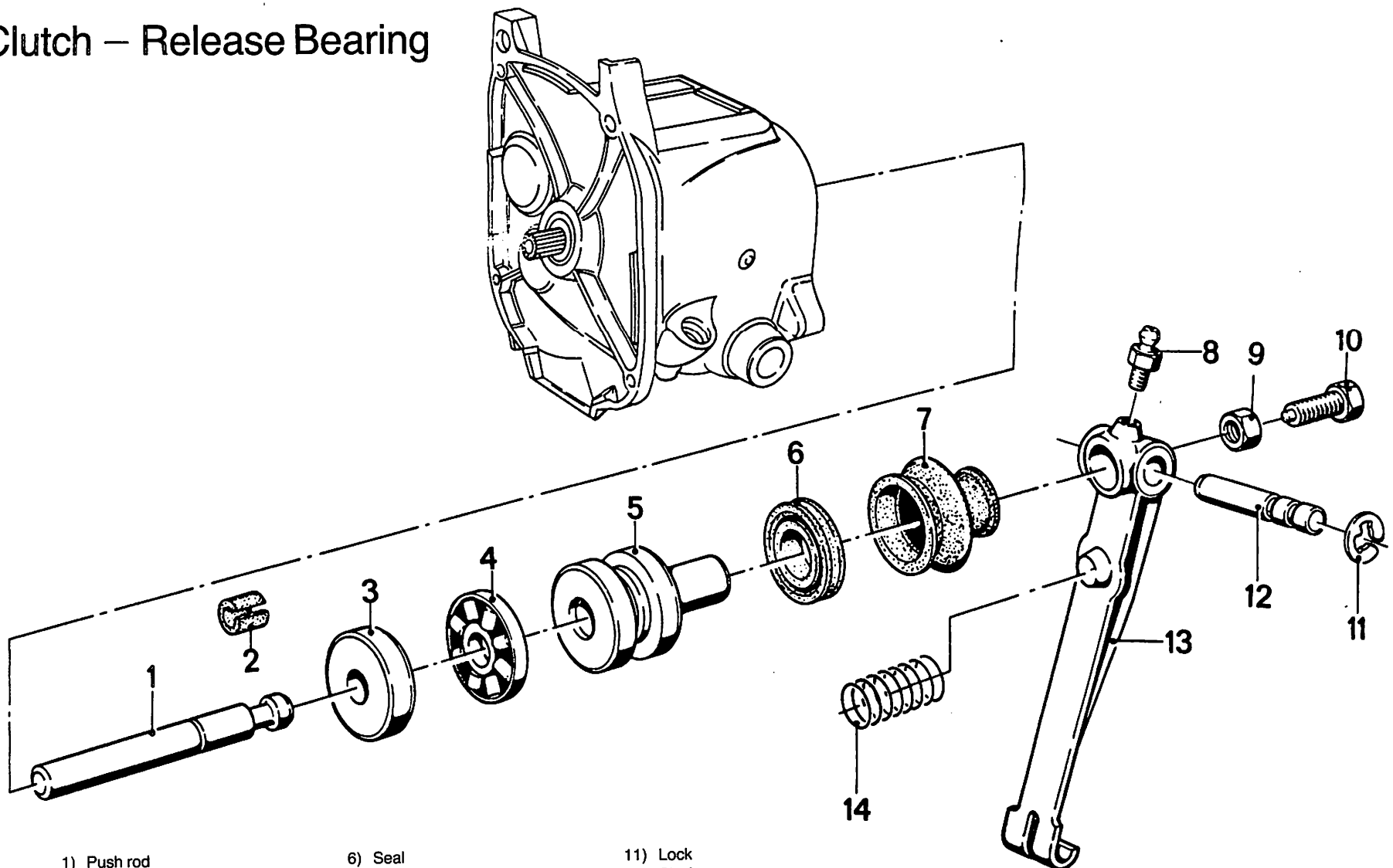

1) Push rod
2) Felt ring
3) Pressure pad
4) Ball cage with balls
5) Pressure piston
6) Seal
7) Sealing cover
8) Lubricating nipple
9) Hexagon nut
10) Hexagon head bolt
11) Lock
12) Shaft
13) Clutch lever
14) Spring

Clutch (up to 1979 models)

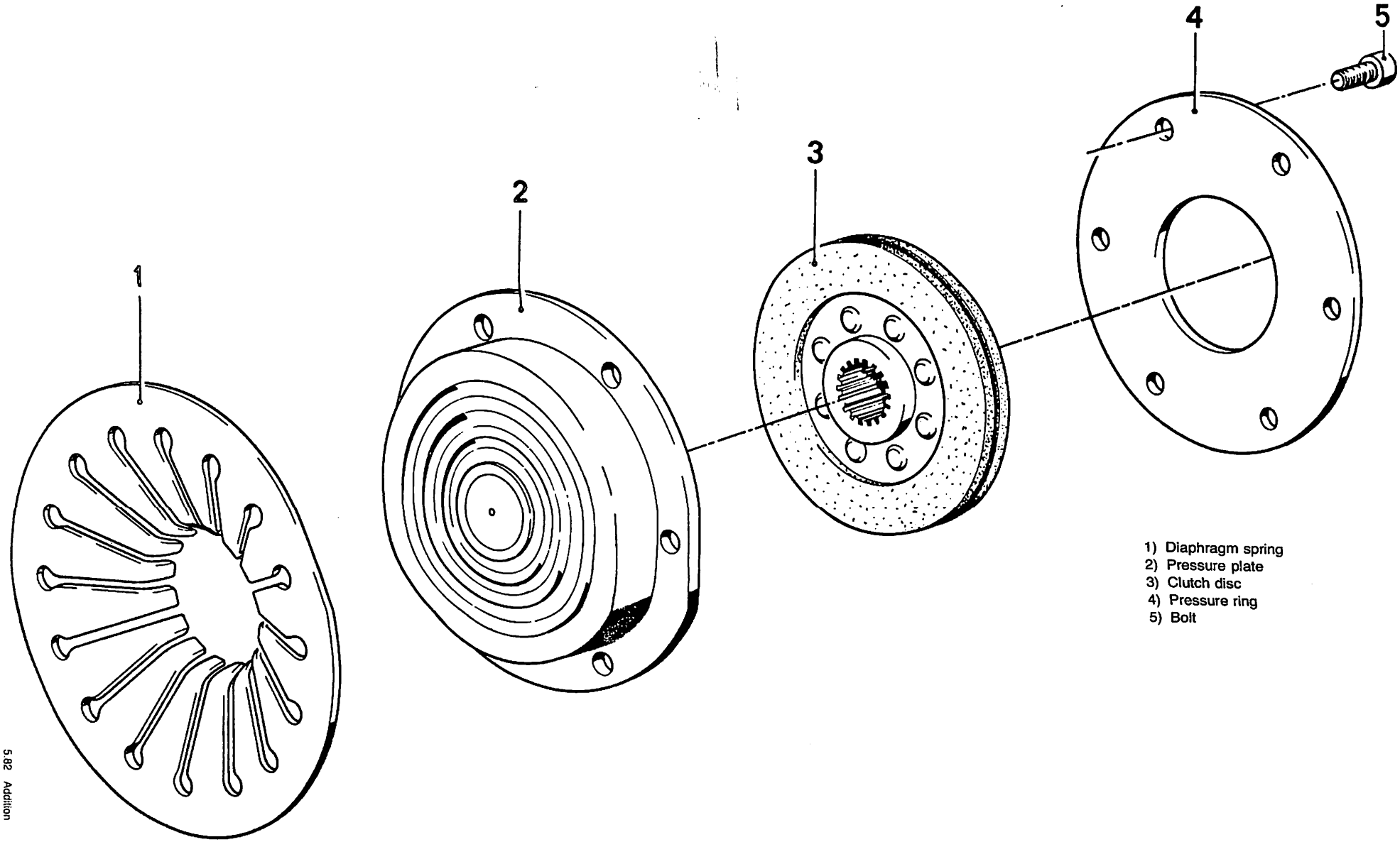

1) Diaphragm spring
2) Pressure plate
3) Clutch disc
4) Pressure ring
5) Bolt

Clutch Controls (Beginning with 1981 Models)

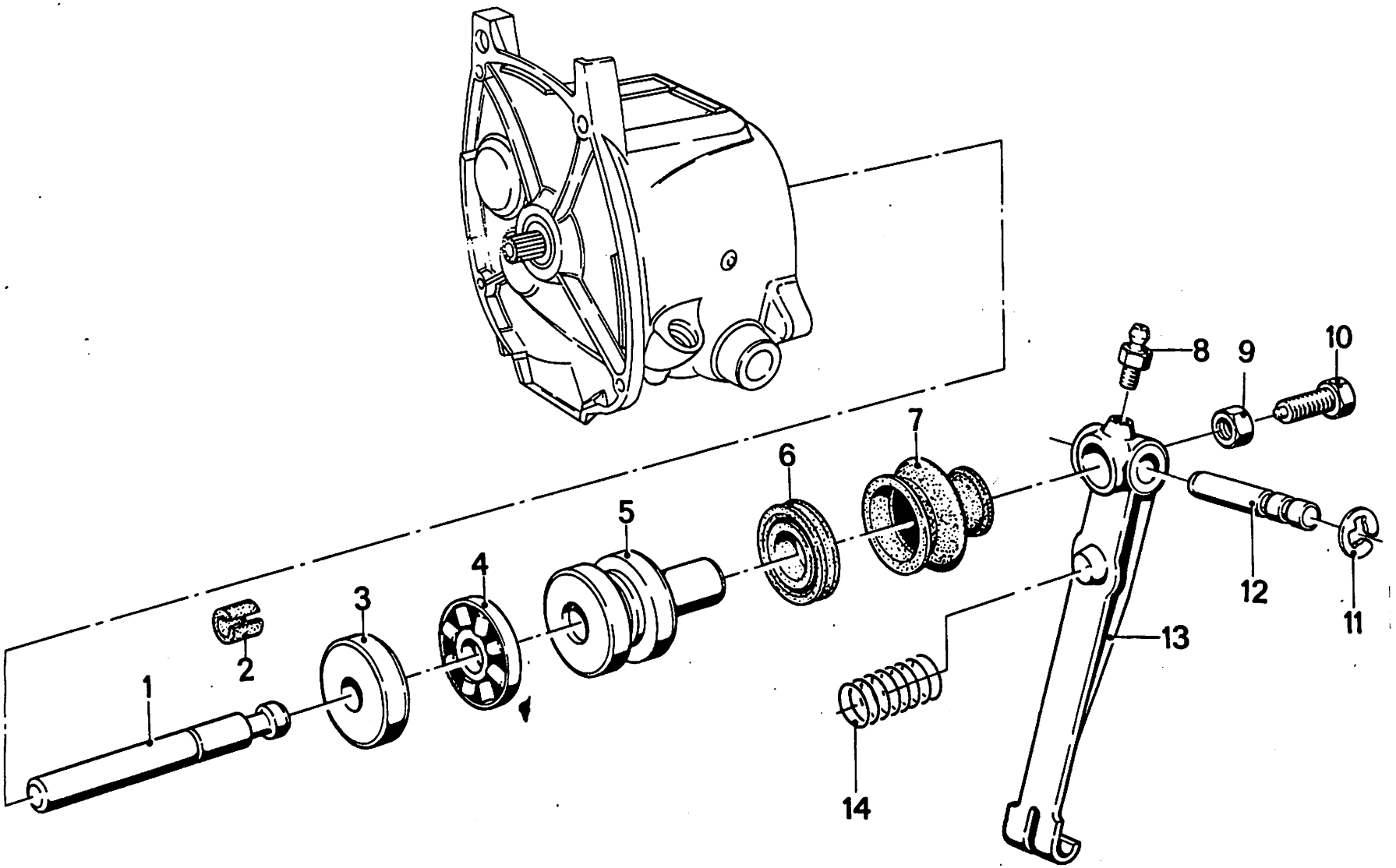

Clutch (Beginning with 1981 Models)

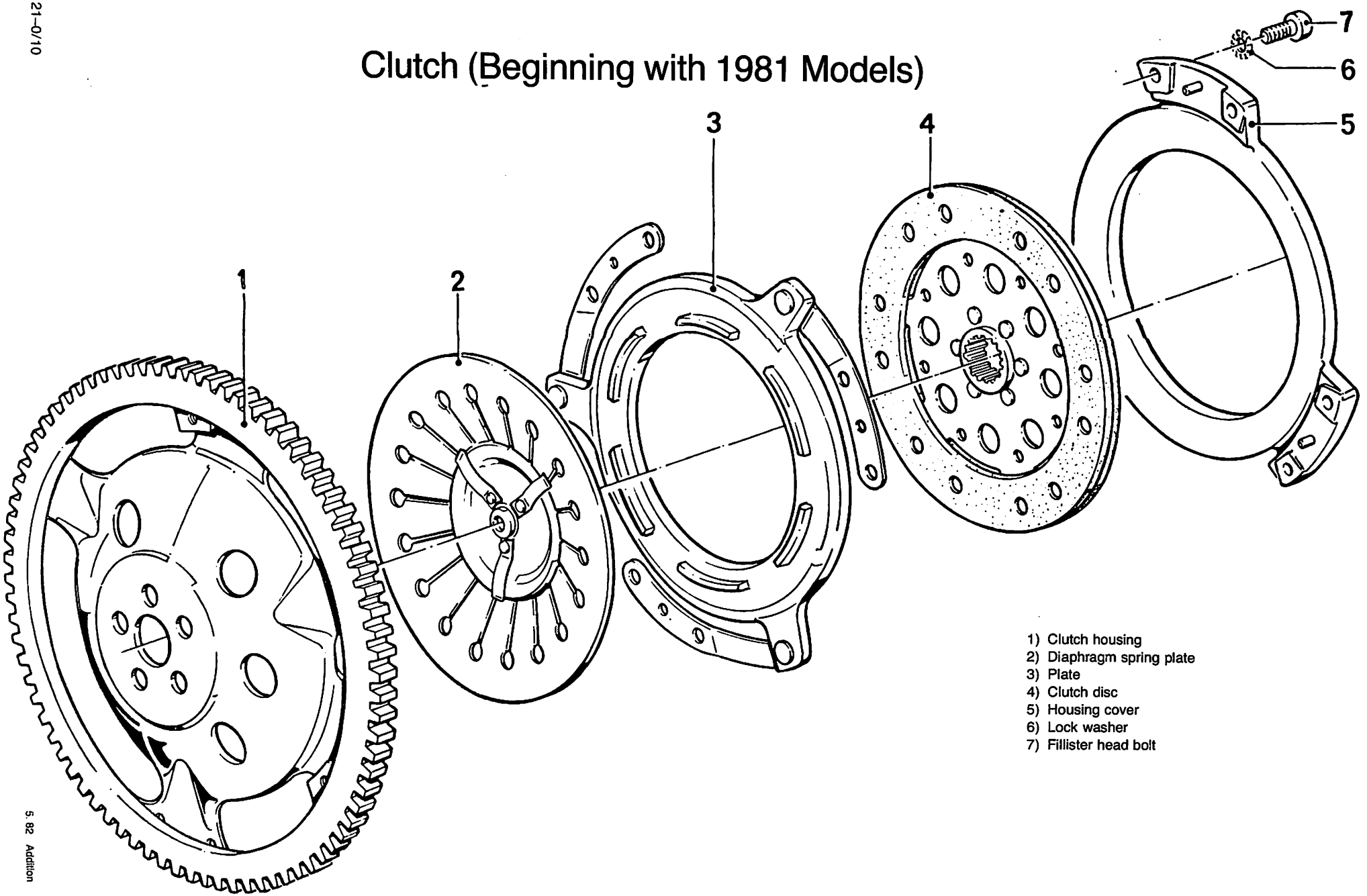

1) Clutch housing
2) Diaphragm spring plate
3) Plate
4) Clutch disc
5) Housing cover
6) Lock washer
7) Fillister head bolt

21 00 004 Adjusting Clutch Play (1981 Models)

The clutch play on the hand lever should be 2 + 0.5 mm; adjust as follows if necessary.

- ○ Unscrew lock nut (1) of cable adjusting screw.
- ○ Turn adjusting screw (2) until...

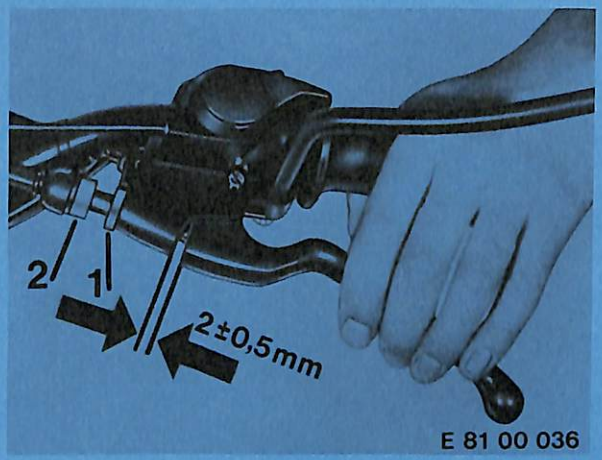

- ○ ... distance "C" = 201 + 2 mm is reached on transmission end clutch lever (lever is inclined toward rear by about 4°). Tighten lock nut (1).
- ○ Unscrew lock nut "A" of transmission end adjusting screw.
- ○ Turn adjusting screw "B" until clutch hand lever play is 2 + 0.5 mm. Then tighten lock nut "A".

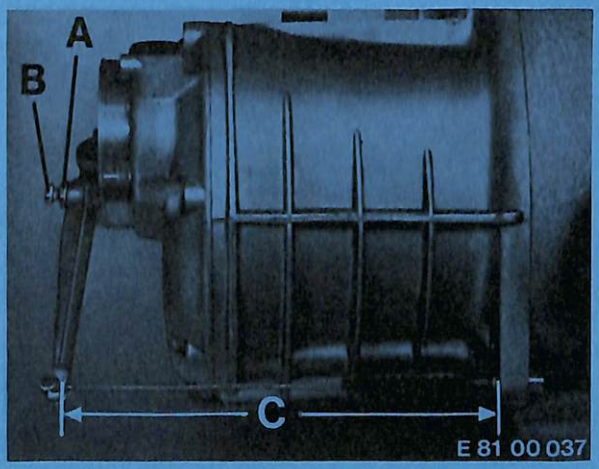

21 21 000 Removing and Installing Clutch

First Method: Engine removed – 11 00 050.
Second Method: Transmission removed – 23 00 020.
(engine remains in frame)
Pictures and text show procedures after this preparatory work.

Unscrew 6 socket head screws with an angled screwdriver, removing every second screw and installing there 3 clamping bolts, whose nuts must be tightened against the pressure ring.

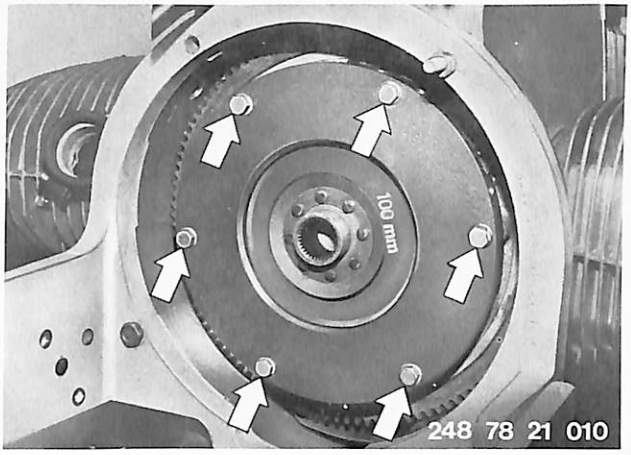

Take off pressure ring, clutch plate, diaphragm spring and plate.

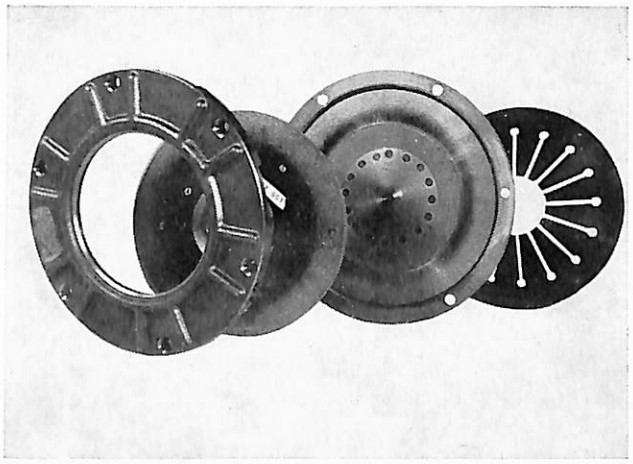

Inspecting and Repairing:

Check clutch plate for wear, diaphragm for distortion and force of diaphragm springs in installed state.
Check lateral runout of drive plate. Refer to Specification for wear limits and clearances.

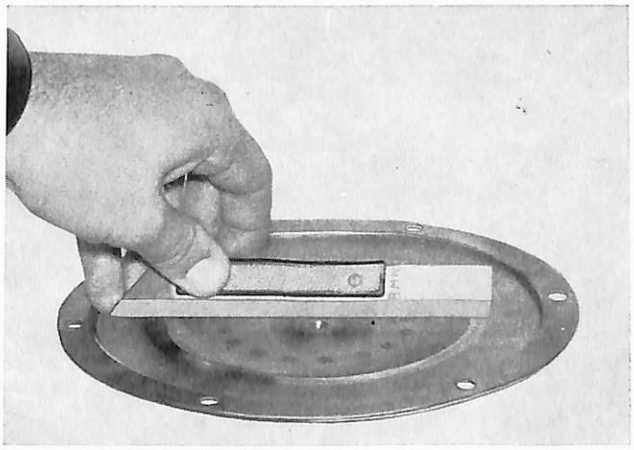

When assembling, use special tool, BMW No. 21 2 650, to center clutch plate. Refer to Specifications for torque values.

Apply a light coat of Molykote Longterm 2 to spline of clutch hub.

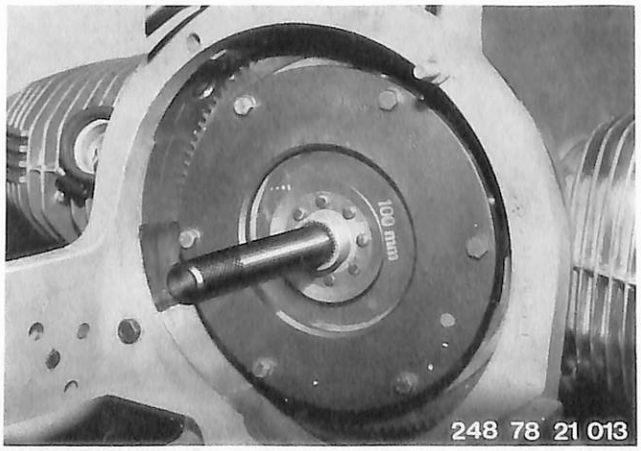

21 21 000 Removing and Installing Clutch (1981 Models)

Remove and install transmission 23 00 020.
Engine does not have to be removed.
Unscrew six mounting bolts on housing cover.

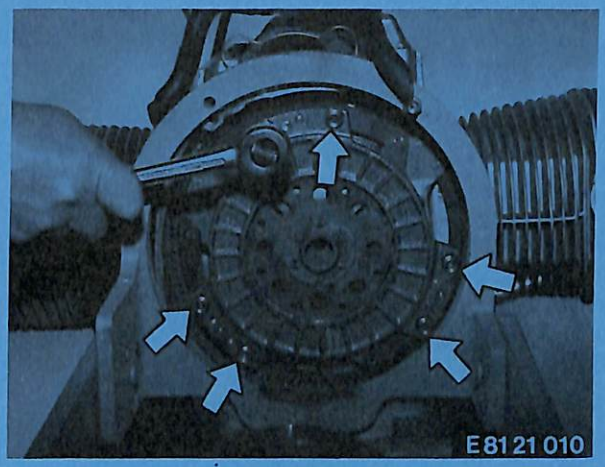

Take off cover (1), clutch disc (2), plate (3) and diaphragm spring plate 4).

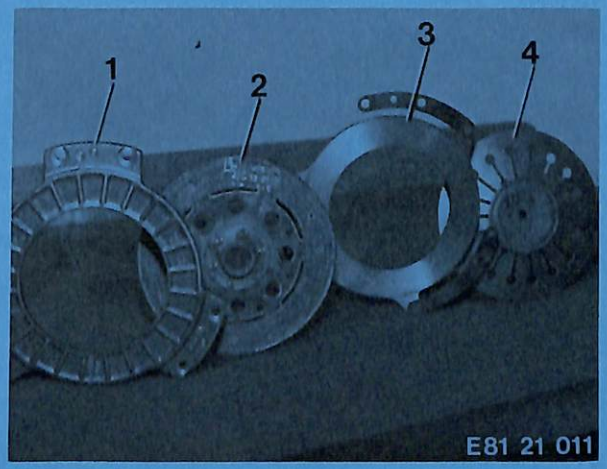

When assembling, center clutch disc with special tool, BMW No. 21 2 660.
Give clutch teeth a thin coat of Molykote U-n paste. See Specifications for tightening torque of clutch housing cover bolts.

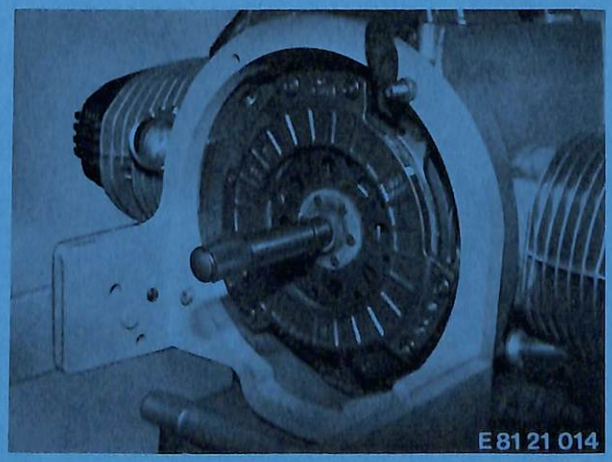

21 51 020 Removing and Installing Clutch Release Lever

Disconnect clutch cable (1).

Pry out circlip (2) with screwdrivers and remove pin (3). Lay parts aside with spring (4).

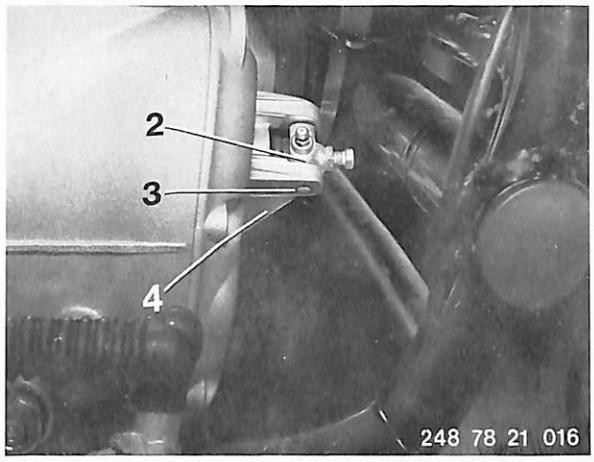

21 51 020 Removing and Installing Clutch Release Lever (1981 Models)

Disconnect clutch cable on release lever.
Unscrew mounting nut (arrow) on console, pull out bolt and remove release lever.
Adjust clutch play 21 00 004.

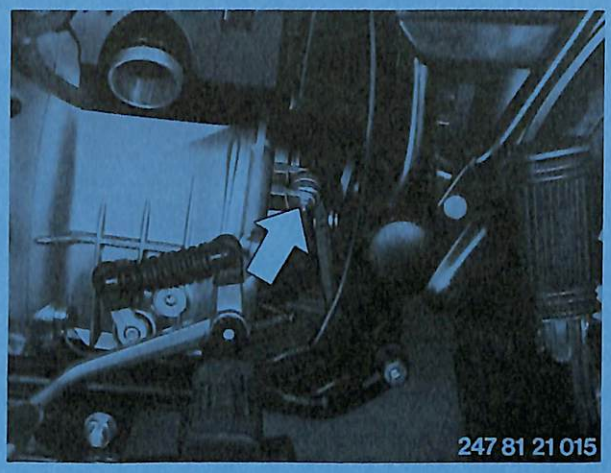

Troubleshooting Clutch

Condition	Cause	Correction
Clutch grabs	Transmission input shaft spaced incorrectly	Space new (see page 23–21/5…/6).
Clutch operation too slow; clutch grabs	Clutch disc/input shaft spline without grease	Clean and lubricate spline

23 Transmission

Specifications		Page 23– 0/3
Specifications – 1981 models		23– 0/7
23 00 020	Transmission – remove and install	23–00/1
23 00 020	Transmission – remove and install (1981 models)	23–00/5
23 11 040	Case cover – remove and install/seal	23–12/1
23 22 001	Gear set – replace	23–21/1
23 31 001	Selector forks – replace	23–31/1
23 31 210	Shift plate console – remove and install	23–31/1
23 31 861	Shift plates – replace	23–31/2
23 31 881	Shift controls – replace	23–31/2
23 31 401	Electric idle gauge – replace	23–31/3
23 51 010	Kickstarter – remove and install	23–31/3
	Transmission – troubleshoot	23–31/5

Transmission

Specifications

Model	R 65
Type	5-speed manual transmission with claw-type shift, bolted to engine, drive torque damping in all gears
Type of shift	hook shift control
Ratios 1st gear 2nd gear 3rd gear 4th gear 5th gear	 4.4 2.86 2.07 1.67 1.50
Oil grade above 5° C (41° F) below 5° C (41° F)	brand name hypoid gear lube SAE 90 brand name hypoid gear lube SAE 80
Oil volume in ltr. (pints)	0.8 (1.7)
Input shaft axial play in mm (in.)	0 . . . 0.1 (0.004) adjusted with shims
Auxiliary shaft axial play in mm (in.)	0 . . . 0.1 (0.004) adjusted with shims
Output shaft axial play in mm (in.)	0 . . . 0.1 (0.004) adjusted with shims
Ball bearing fit in case	Press fit (heat case to approx. 100° C/210° F when installing)
Axial play of free-running gear wheels on shaft in mm (in.)	0.15 . . . 0.30 (0.006 . . . 0.012)

Transmission

Specifications

Model	R 65
Bushings on output shaft in mm (in.)	0.005 . . . 0.035 (0.0002 . . . 0.0014)
Drive flange radial runout in mm (in.) Drive flange axial runout in mm (in.)	±0.05 (0.002) ±0.05 (0.002)
Power transmission from transmission to rear wheel	Sealed propeller shaft with torsional absorber in right control arm tube, universal joint on transmission end and hypoid tooth clutch bell housing on wheel drive end.
Axial play of foot-operated selector lever shaft in mm (in.)	0.1 (0.004)

Torque Values in Nm (ft lbs)

Transmission to engine	20 . . . 23 (14 . . . 17)	Transmission case/cover	7 . . . 8 (5 . . . 6)
Output flange (drive flange) to transmission output shaft	200 . . . 220 (145 . . . 159)	Nut for kick starter lever	20 . . . 23 (14 . . . 17)
		Oil filler plug	28 . . . 31 (20 . . . 22)
		Oil drain plug	23 . . . 26 (17 . . . 19)

Tighten all other bolts and nuts to common torque values as listed in tables from bolt/nut suppliers or the new BMW Standard 60002.0.

Specifications 1981 Models

Model	R 65	R 65 LS
Type	5-speed manual transmission with claw-type shift, bolted to engine, drive torque damping in all gears	
Type of shift	hook shift control	
Ratios		
1st gear	4.4	
2nd gear	2.86	
3rd gear	2.07	
4th gear	1.67	
5th gear	1.50	
Oil grade above 5° C (41° F)	brand name hypoid gear lube SAE 90	
below 5° C (41° F)	brand name hypoid gear lube SAE 80	
Oil volume in ltr. (pints)	0.8 (1.7)	
Input shaft axial play in mm (in.)	0 . . . 0.1 (0.004) adjusted with shims	
Auxiliary shaft axial play in mm (in.)	0 . . . 0.1 (0.004) adjusted with shims	
Output shaft axial play in mm (in.)	0 . . . 0.1 (0.004) adjusted with shims	
Ball bearing fit in case	Press fit (heat case to approx. 100° C/210° F when installing)	
Axial play of free-running gear wheels on shaft in mm (in.)	0.15 . . . 0.30 (0.006 . . . 0.012)	

Specifications 1981 Models

Model	R 65	R 65 LS
Bushings on output shaft in mm (in.)	0.005 . . . 0.035 (0.0002 . . . 0.0014)	
Drive flange radial runout in mm (in.)	±0.05 (0.002)	
Drive flange axial runout in mm (in.)	±0.05 (0.002)	
Power transmission from transmission to rear wheel	Sealed propeller shaft with torsional absorber in right control arm tube, universal joint on transmission end and hypoid tooth clutch bell housing on wheel drive end.	
Axial play of foot-operated selector lever shaft in mm (in.)	0.1 (0.004)	

Torque Values in Nm (ft lbs)

Transmission to engine	33 (24)	Transmission case/cover	8 (6)
Output flange (drive flange) to transmission output shaft	221,5 (160)	Nut for kick starter lever	22,5 (16)
Console	19 (14)	Oil filler plug	31 (22)
		Oil drain plug	26 (19)

Tighten all other bolts and nuts to common torque values as listed in tables from bolt/nut suppliers or the new BMW Standard 60002.0.

Shift Mechanism

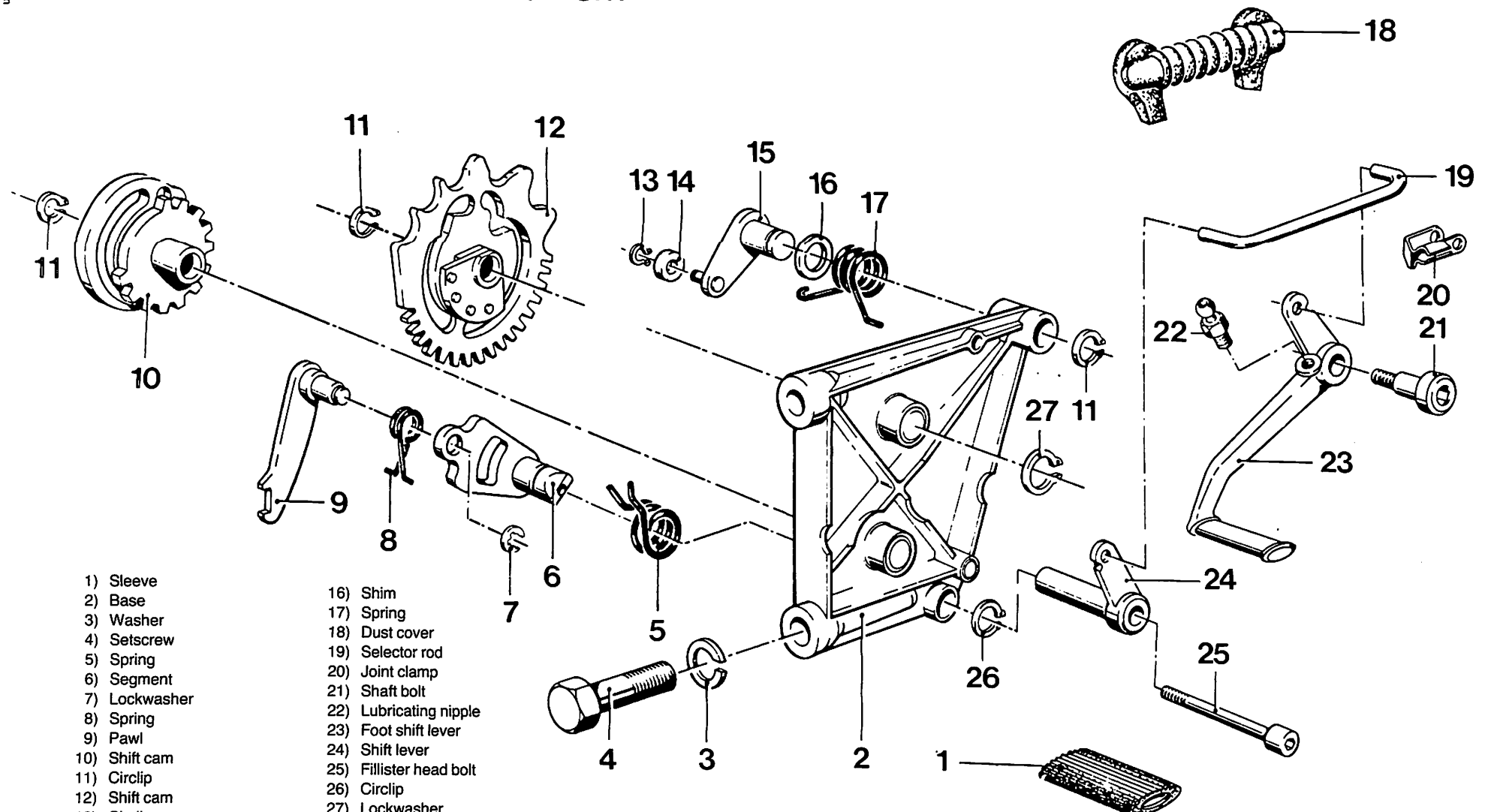

1) Sleeve
2) Base
3) Washer
4) Setscrew
5) Spring
6) Segment
7) Lockwasher
8) Spring
9) Pawl
10) Shift cam
11) Circlip
12) Shift cam
13) Circlip
14) Roller
15) Lever
16) Shim
17) Spring
18) Dust cover
19) Selector rod
20) Joint clamp
21) Shaft bolt
22) Lubricating nipple
23) Foot shift lever
24) Shift lever
25) Fillister head bolt
26) Circlip
27) Lockwasher

Input and Output Shaft with Intermediate Shaft

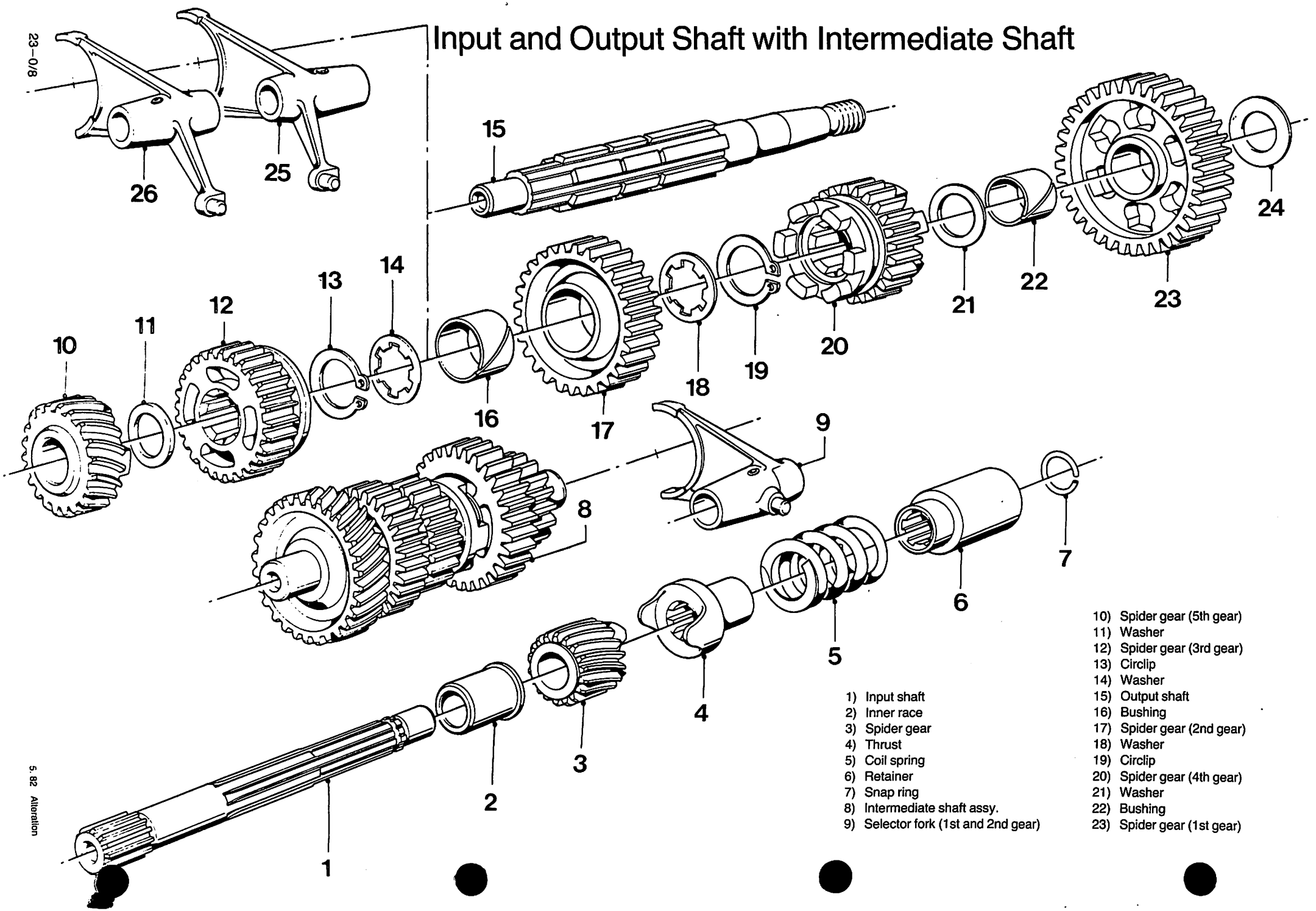

1) Input shaft
2) Inner race
3) Spider gear
4) Thrust
5) Coil spring
6) Retainer
7) Snap ring
8) Intermediate shaft assy.
9) Selector fork (1st and 2nd gear)
10) Spider gear (5th gear)
11) Washer
12) Spider gear (3rd gear)
13) Circlip
14) Washer
15) Output shaft
16) Bushing
17) Spider gear (2nd gear)
18) Washer
19) Circlip
20) Spider gear (4th gear)
21) Washer
22) Bushing
23) Spider gear (1st gear)

23 00 020 Removing and Installing Transmission

Place motorcycle on center stand and use an additional support behind the center stand.

Remove and install air cleaner – 13 72 000.

Disconnect both choke cables from carburetors and lay aside left half of air cleaner housing with choke cables.

Unscrew nut (1) with a straight ring wrench, loosen hexagon head screw (2) and

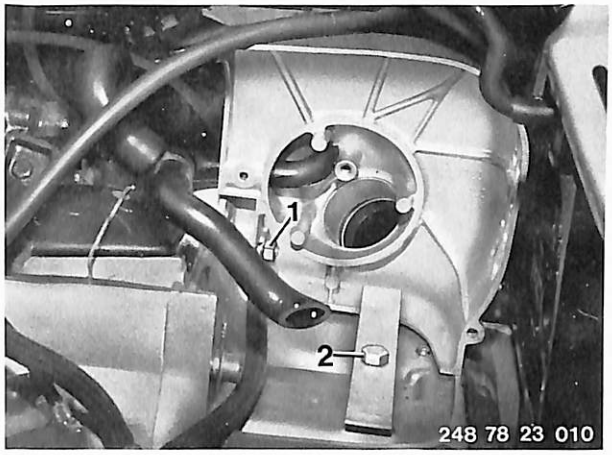

remove right half of air cleaner housing, pushing back vent hose (3).

Remove carburetors.

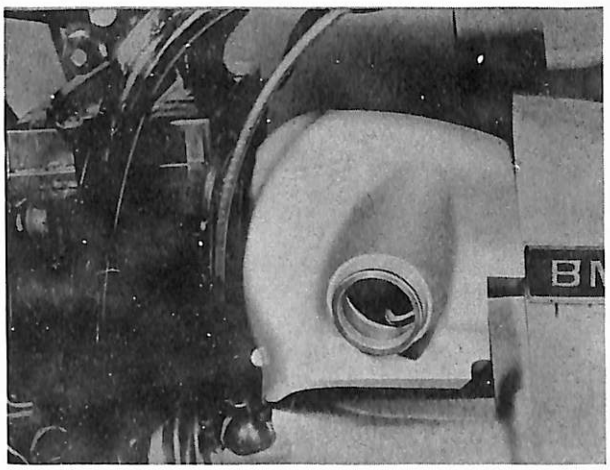

Push back rubber cap for speedometer drive and pull out speedometer drive cable after unscrewing screw and removing battery ground wire with washer.

Remove and install battery – 61 21 010.
Remove and install battery console – 61 21 100.

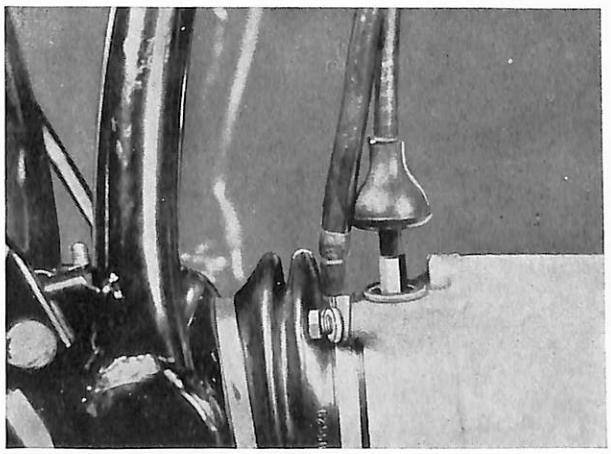

Loosen clamp on rubber bellows on transmission and push back rubber bellows as far as possible. Don't forget oil catch tray.

Unscrew fout twelve-sided head screws with a ring wrench and lay aside with washers. Operate brake pedal to hold propeller shaft.

Use special wrench, BMW No. 00 2 560, to tighten screws.
Refer to Specifications for torque values.

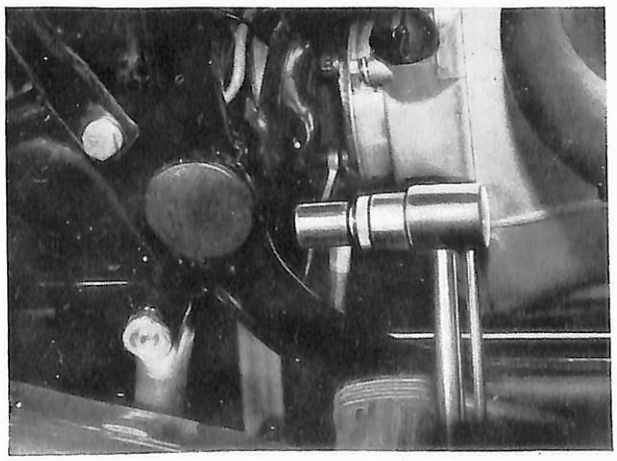

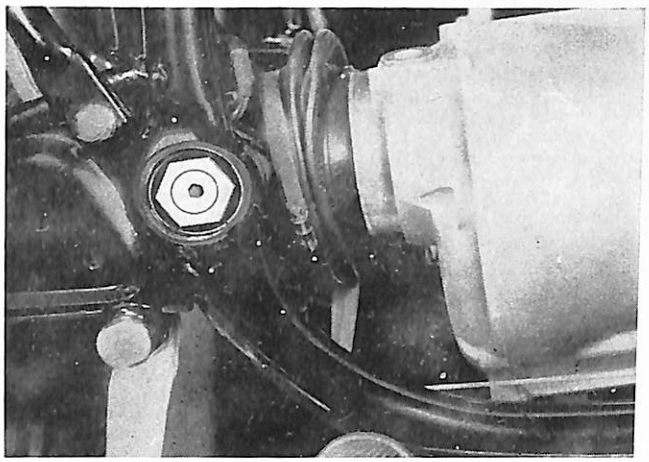

Take off end cap from control arm bearings, loosen counternut on bearing pin and unscrew both bearing pins.

When working in control arm again, make sure that both pressure sleeves do not protrude.

Refer to Specifications for torque values.

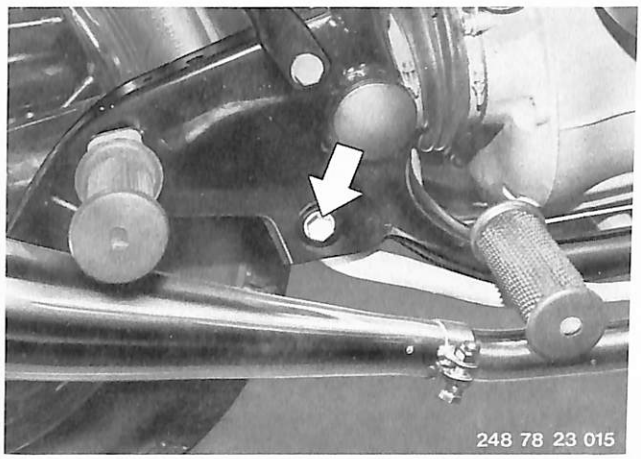

Detach bearing pin from brake pedal and remove.
Detach push rod at rear wheel brake.
Pull out brake pedal with push rod downward.

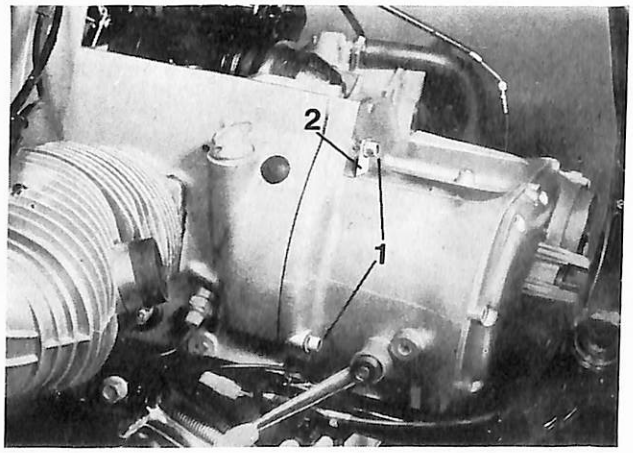

Unscrew two socket head screws 1 and one socket head screw on transmission at bottom right.

Don't forget bar 2 when reassembling.

Detach shift mechanism from brake peda. Push back rubber bellows. Unhook spring and pry push rod out of lock with a screwdriver.

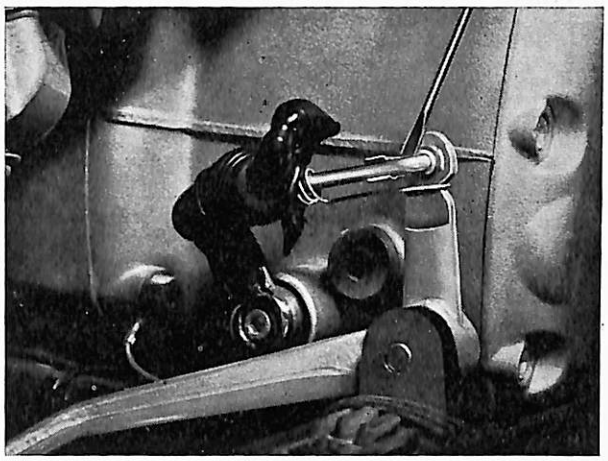

Hold control arm tight with help of a piece of wood (20 x 20 mm, 400 mm long / 3/4 x 3/4", 15 3/4" long) inserted between tire and frame rear section at rear most position.

Remove transmission carefully, place on footrest and disconnect wires for idle control.

Remove transmission all the way.

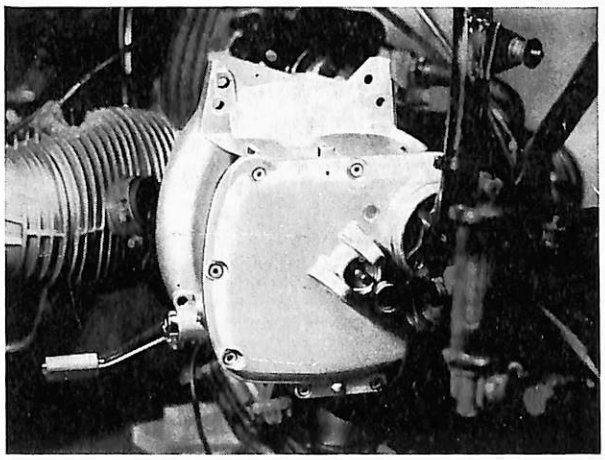

23 00 020 Removing and Installing Transmission as Preliminary Work for Removal of Engine (1981 Models)

Unglue frame covers (protective sheet) in area of push rod protective tube.
Remove and install air cleaner 13 72 000.
Remove and install muffler 18 11 321.
Disconnect clutch cable on transmission end.
Unscrew mounting nut (arrow) on console, pull of shaft and take off release lever.

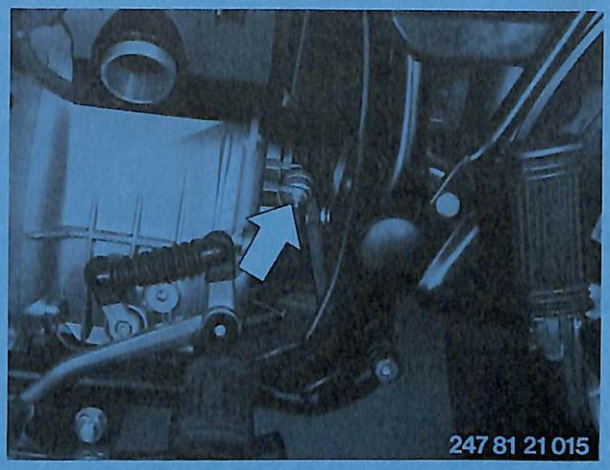
247 81 21 015

Pull back rubber cover on selector linkage and press pull rod out of lock with a screwdriver.
Disconnect footrest on frame.

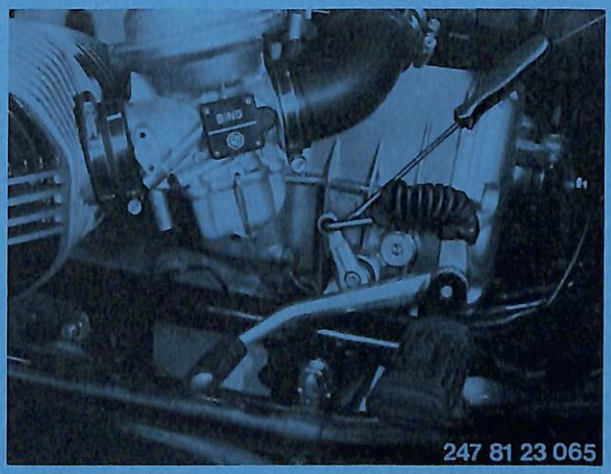
247 81 23 065

Loosen hose clamps on left and right air lines and remove after pushing back rubber sleeve.
Disconnect left carburetor on cylinder head.

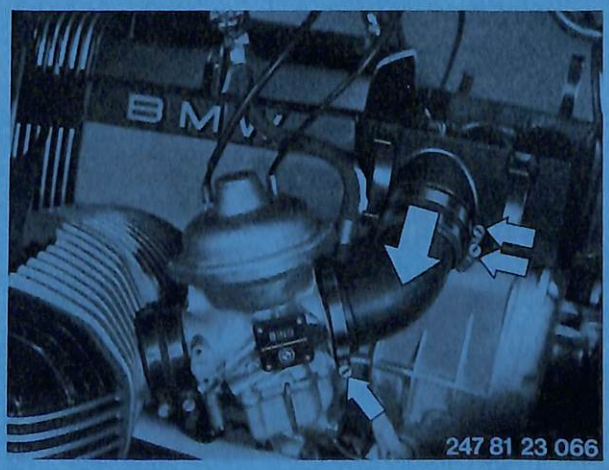
247 81 23 066

Pull T-adapter for crankcase vent out of air cleaner housing in direction of arrow.

247 81 23 067

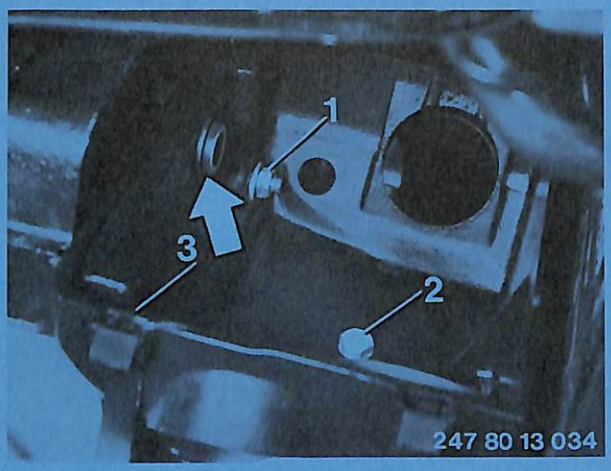

Press vent line (arrow) out of air cleaner housing. Unscrew hexagon nut (1) and hexagon head bolts (2 and 3) on housing.

■

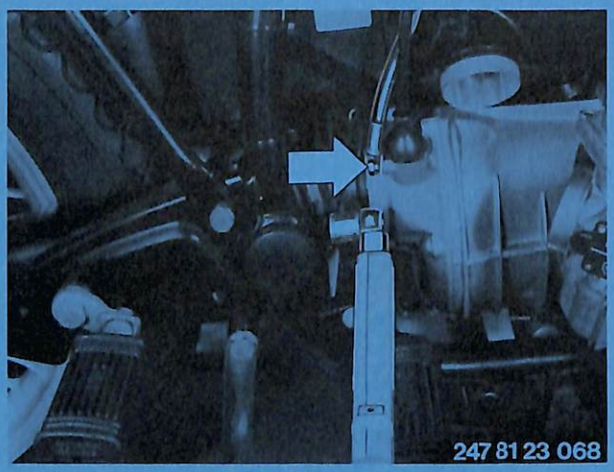

Disconnect rubber cover between swinging arm and transmission on transmission end. Unscrew twelve-sided head bolts on universal joint, holding rear wheel tight with the rear wheel brake. When installing, tighten bolts with special wrench, BMW No. 00 2 560. See Specifications for tightening torque.

Unscrew hexagon head bolt (arrow) and pull out speedometer drive. This also disconnects the battery ground wire.

■

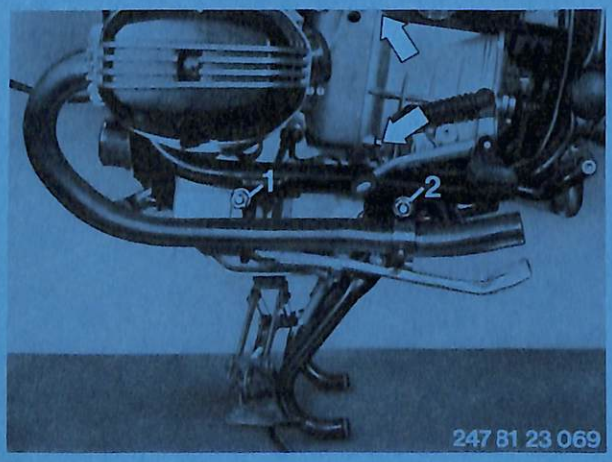

Unscrew engine mounting boults (1 and 2) as well as left and right transmission mounting bolts on engine (arrow). Support engine with a heavy duty car jack or hydraulic lift in such a manner, that engine bolts can still be pulled out.
Take off engine guard and pull engine forward on to the frame covers.

See Specifications for tightening torque.

Remove air cleaner housing lower section.

■

Disconnect cover on transmission cover and remove with spring. Pull back transmission far enough that push rod is visible. Push back push rod in transmission with a pliers until the transmission can be lifted out. Catch pressure piston and thrust bearing with rags.

■

Turn transmission on side and pull off wire connector on idle switch (arrow).
Remove transmission from left side and lay aside.

Note:
Apply a thin coat of Molykote U-n paste on input shaft spline prior to installation.

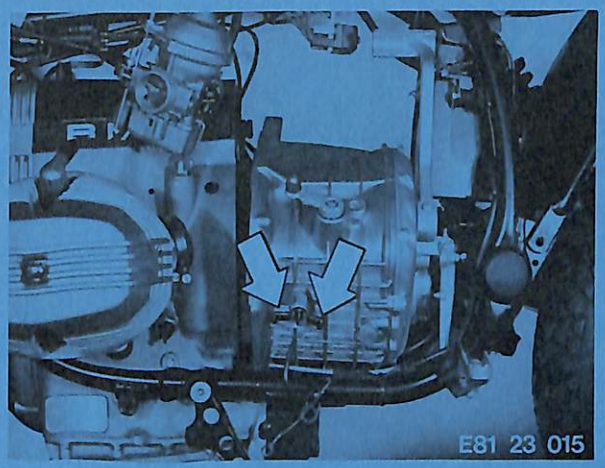

23 11 040 Removing and Installing/Sealing Transmission Case

Remove and install transmission 23 00 020.
Place transmission on assembly stand and secure with two bolts opposite each other.
Press clutch push rod out of transmission.

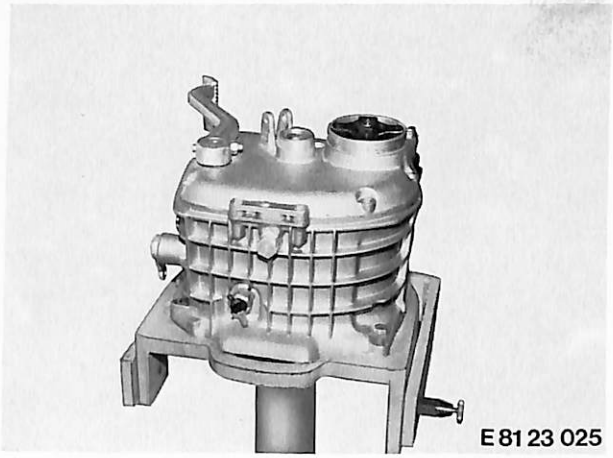
E 81 23 025

Unscrew bolt and pull out guide sleeve for speedometer drive gear. Remove drive gear.

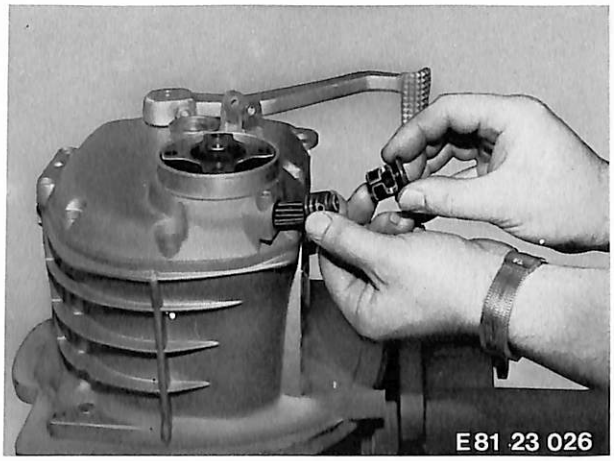
E 81 23 026

Bolt holder, BMW No. 23 1 700, without pressing-off spindle on drive flange of input shaft with four bolts. Unscrew mounting nut.

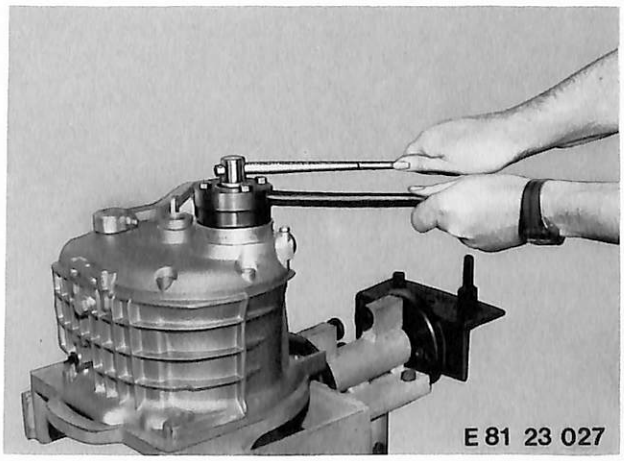
E 81 23 027

Press off drive flange with pressing-off spindle after unscrewing holder, BMW No. 23 1 700. Also disconnect conical seat with a light knock on the spindle.

Installation:
When installing drive flange, clean conical seats with a greaseless cleaning solution and install dry.
Lubricate mounting nut with a viscous oil.

See Specifications for tightening torque.

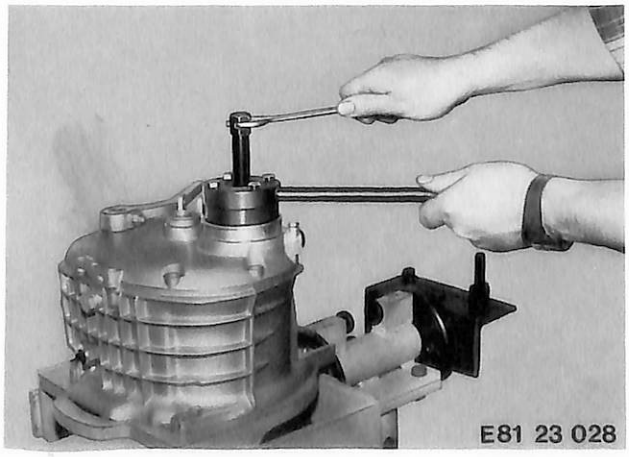
E 81 23 028

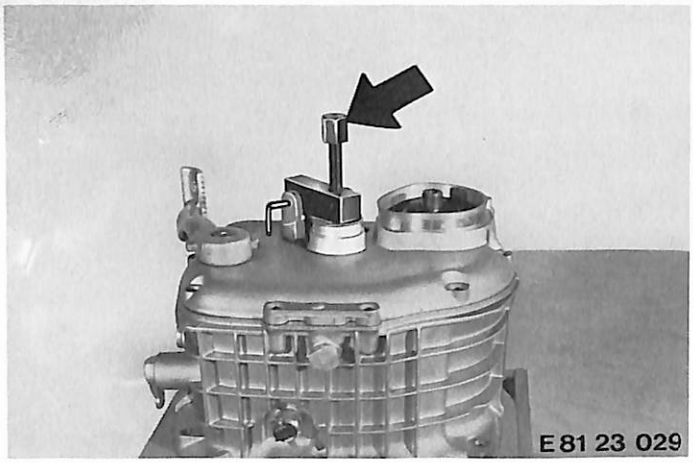

Unscrew transmission cover mounting bolts. Heat transmission cover to about 100° C and press off with pressing-off tool, BMW No. 23 1 630.
See Specifications for tightening torque.

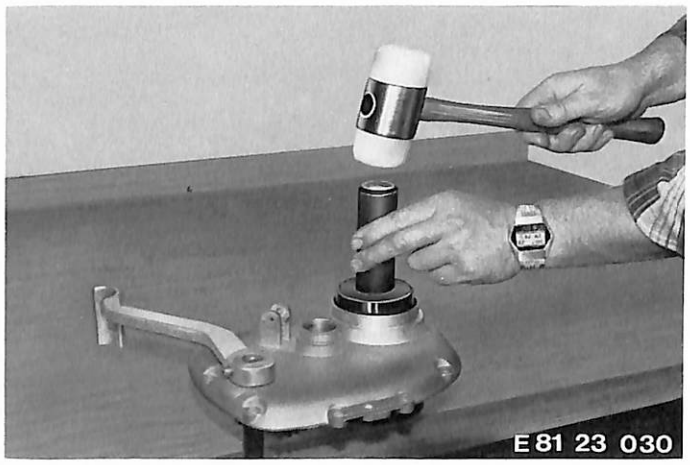

Take shims for axial play of shafts out of cover. Knock seal out of cover with a mandrel. Knock in new seal with special tool, BMW No. 23 1 750.

Installation:
Open end of seal faces output flange.

23 22 001 Removing and Installing/Disassembling Gear Set

Remove and install transmission 23 00 020.
Remove and install/seal transmission case cover 23 11 040.
Pull input shaft out of case while applying light knocks on front end of shaft with a plastic hammer.

E 81 23 031

Pull off input shaft ball bearing with cover, but without bearing sleeve, with a standard puller, BMW No. 00 7 500 (use pressure pad for crankshaft).

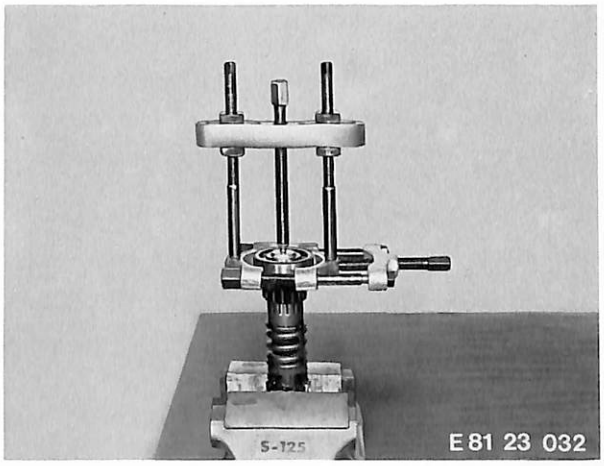

E 81 23 032

Pry out small shaft seal with a small screwdriver.

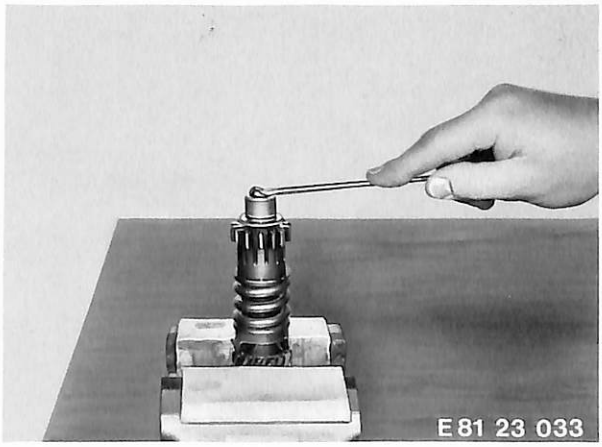
E 81 23 033

Pull off bearing sleeve with standard puller, BMW No. 00 7 500, and a small pressure pad.

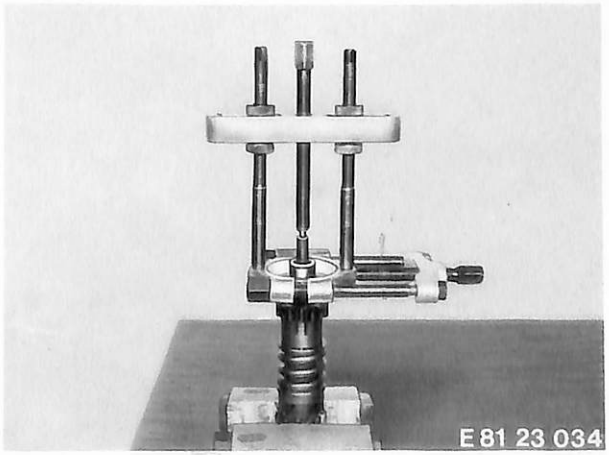
E 81 23 034

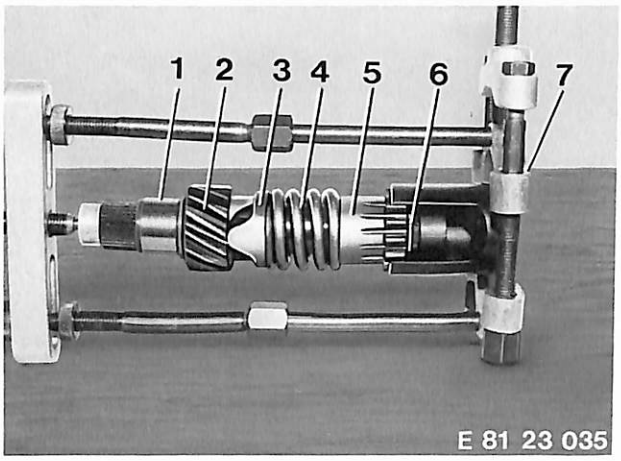

1. Input shaft
2. Spur gear
3. Pressure element
4. Coil spring
5. Counterelement
6. Snap ring
7. Standard puller, BMW No. 00 7 500.

■

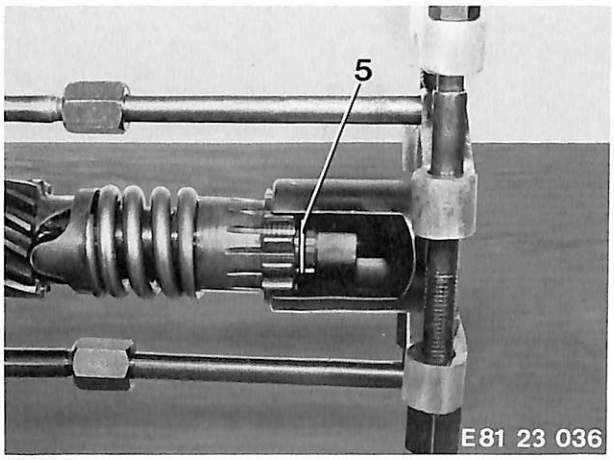

Compress coil spring with the standard puller in conjunction with assembly sleeve 23 2 655. Press out circlip (5) with a mandrel or screwdriver and release the puller.

■

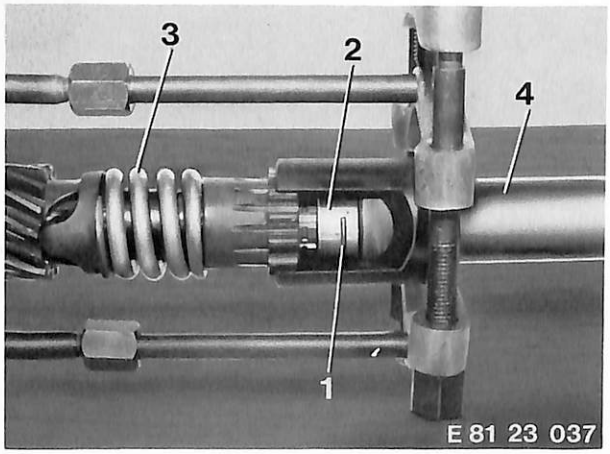

When assembling the input shaft, compress spring (3) with assembly sleeve 23 2 655 and standard puller 00 7 500. Place circlip (1) on guide sleeve (2) of tool no. 23 2 650 and push circlip with slip sleeve (4) forward up to groove.

■

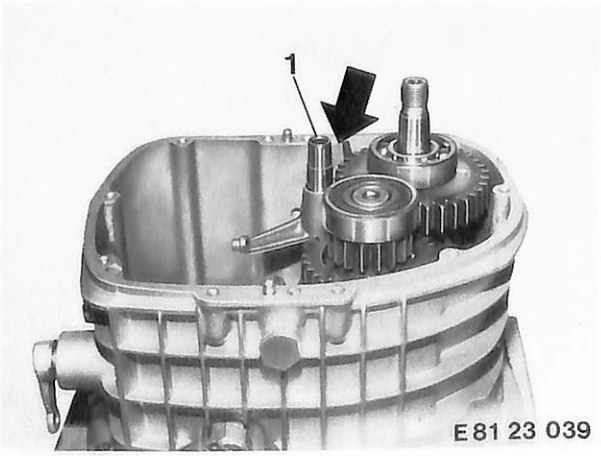

Remove and install console for shift plates 23 31 210. Unscrew and remove oil baffle plate (arrow). Pull out shaft for 1st, 2nd and 5th gear selector forks (1). Remove selector forks.

Installation:
Short guide ends of selector forks face each other.

■

Heat transmission at bearing seat of output and intermediate shafts to 100° C and remove both shafts with 3rd/4th gear selector fork.

Installation:
Install selector fork in case with long guide end facing down.

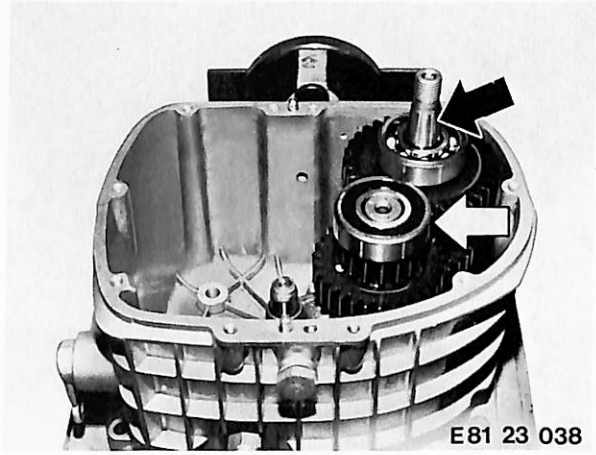
E81 23 038

Replace radial oil seal for input shaft.
Lift out seal with a screwdriver.
Knock out seal with a screwdriver.
Knock in new seal with mandrel, BMW No. 23 1 650, used in conjunction with handle, BMW No. 00 5 500.

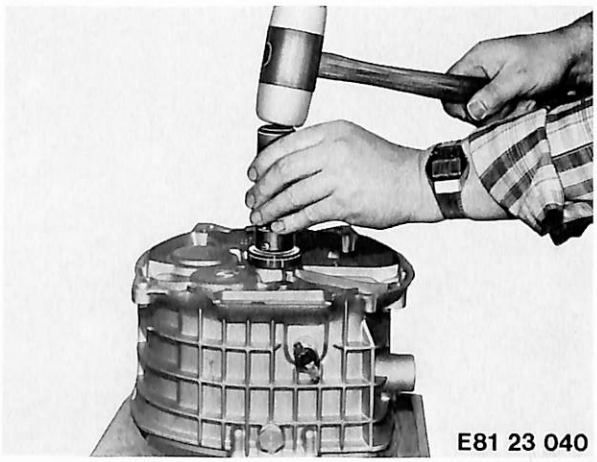
E81 23 040

Replace roller bearing of input shaft.
Heat transmission case to about 100° C and pull out bearing (arrow). Install new bearing in heated case.

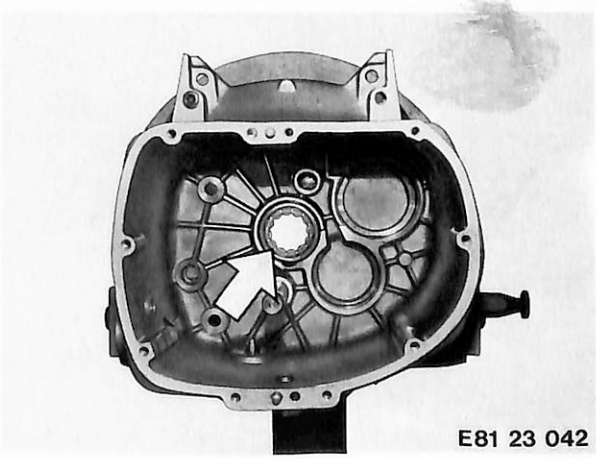
E81 23 042

Replace radial oil seal for selector lever.
Lift out seal with a screwdriver. Push new seal (arrow) on selection lever and press into case by applying light knocks.

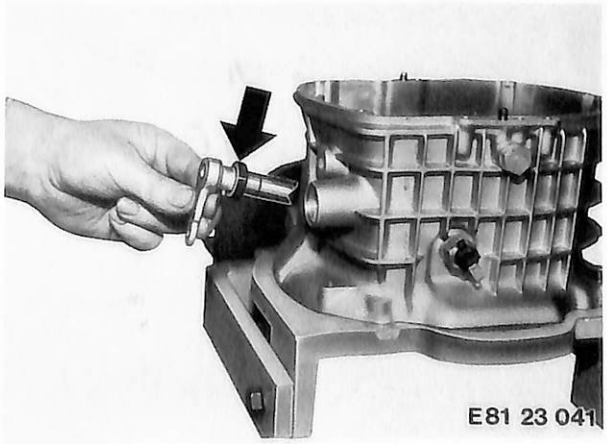
E81 23 041

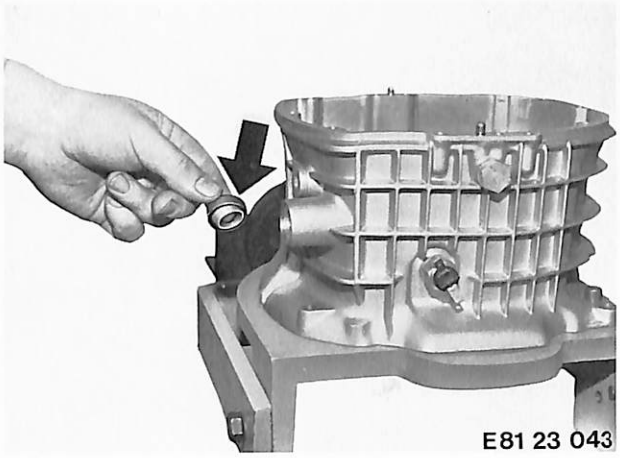

Replace selector lever radial joint bearing. Remove radial oil seal. Pull out bearing (arrow) with a finger or hook.
Give new bearing a light coat of oil and install.

■

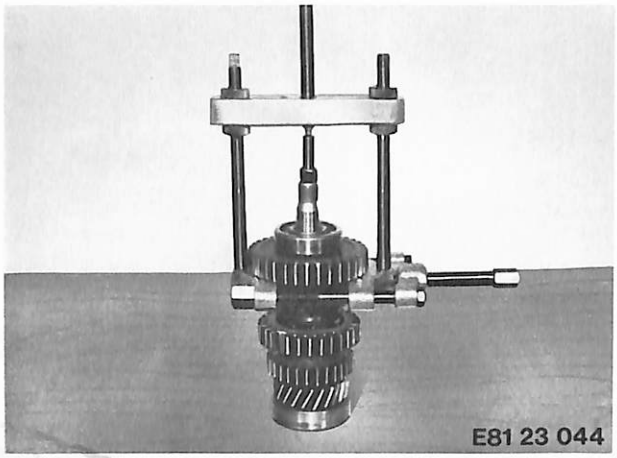

Disassemble output shaft.
Pull off 1st gear and bearing with the universal puller, BMW No. 00 7 500. Remove 4th gear.

■

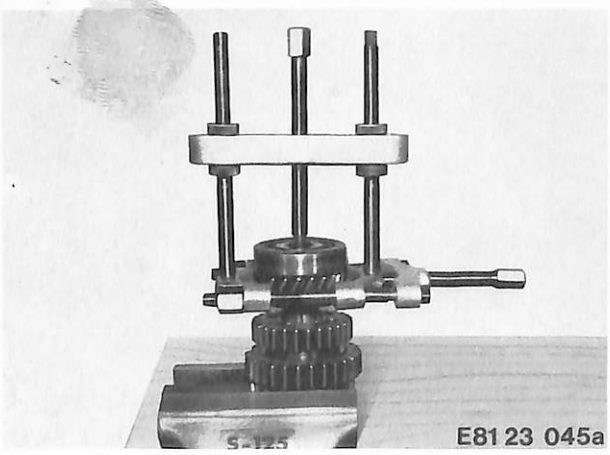

Clamp output shaft in a vise fitted with soft jaws. Remove circlip in front of bearing. Pull off 5th gear and bearing with the standard puller, BMW No. 00 7 500. Remove 3rd gear.

■

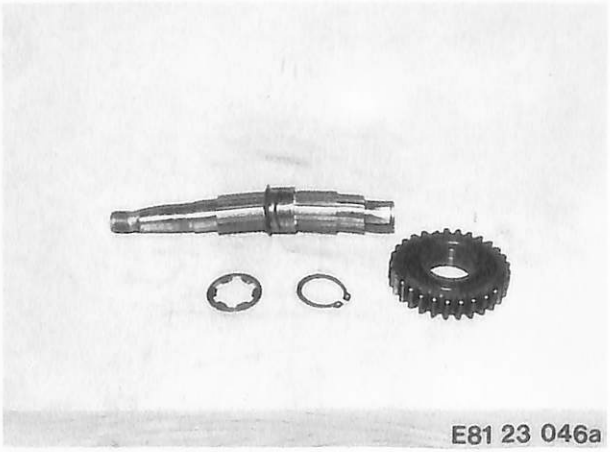

Remove circlip in front of 2nd gear. Pull gear with washer off of shaft.

Note:
If bushing pressed on shaft is defective, replace the output shaft.

■

If defective, replace complete intermediate shaft. Pull off bearings (arrows) with Kukko puller, BMW No. 00 7 500.

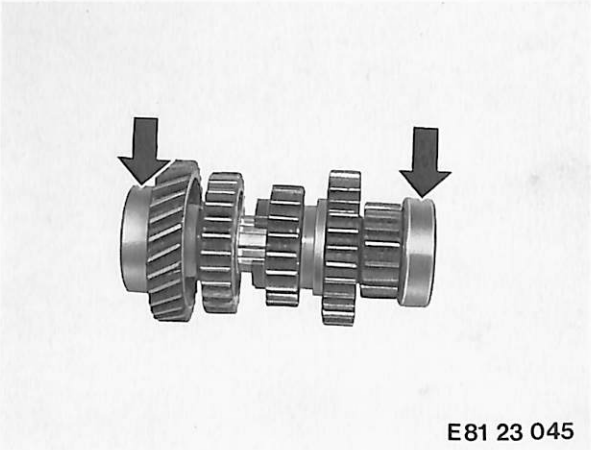

Heat transmission case to about 80 ... 100° C. Place oil baffle plate in ball bearing bore of case (arrow) prior to installing the output shaft.
Install output shaft and intermediate shaft (1 and 2) in case together with 3rd and 4th gear selector fork (3).
Make sure that the selector fork does not jam. Then insert 1st, 2nd and 5th gear selector forks (4) with their short ends facing each other and lock on shaft.
Mount shift base (5) in neutral position and install input shaft.

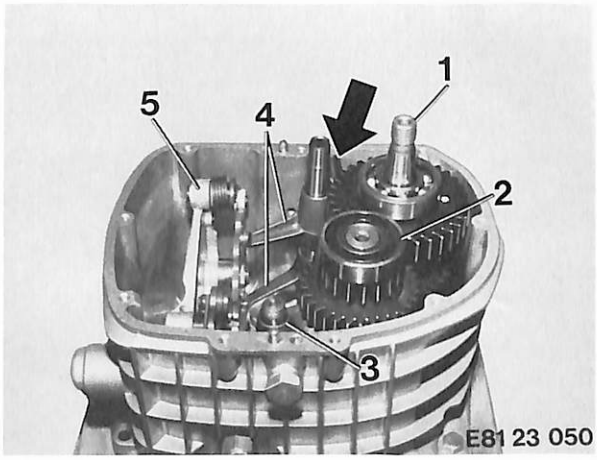

To guide the shafts, place measuring plate, BMW No. 23 3 650, on case and bolt down two screws (arrows) to have plate fit tight.

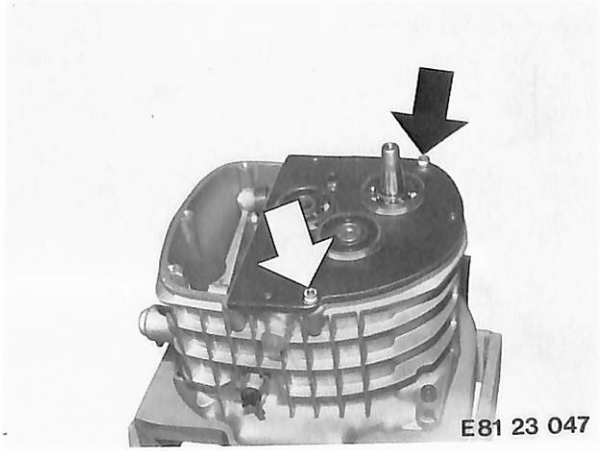

To adjust axial play of the three transmission shafts, measure distance between ball bearing outer race and measuring plate with a depth gauge, BMW No. 00 2 550. Measured distance + material thickness + paper gasket (0.2 mm) = actual distance.

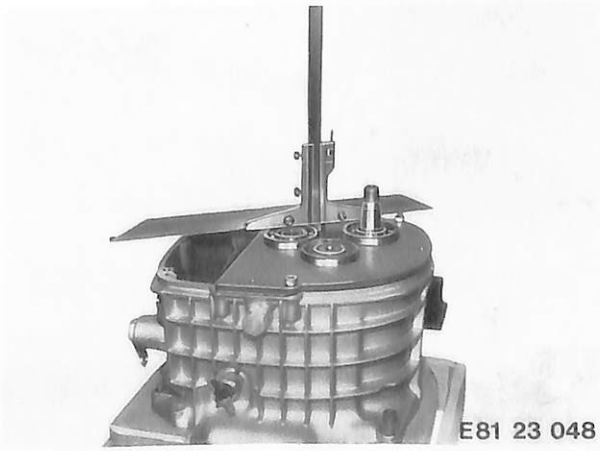

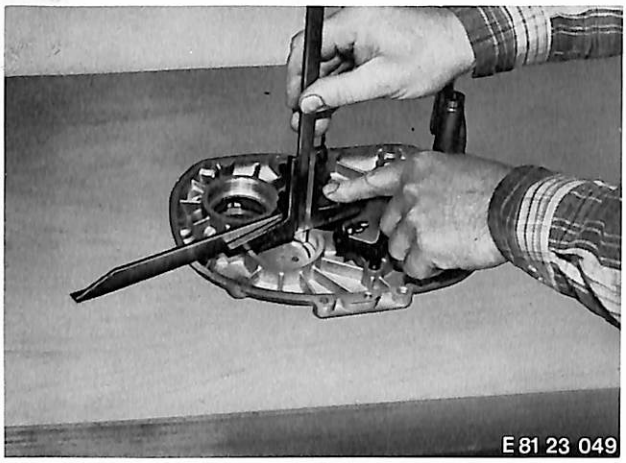

Measure distance from case cover mating surface to base of ball bearing seat in cover.
It is recommended to enter the measured distances in a table as shown in the example below.
Refer to Specifications for permissible axial play values.

Cover		Input Shaft	Layshaft	Output Shaft
Distance	mm	15.35	15.75	15.35
Case	mm	7.25	7.30	7.30
+				
Measuring plate	mm	7.50	7.50	7.50
+				
Gasket	mm	0.20	0.20	0.20
Distance	mm	14.95	15.00	15.00
Difference	mm	0.40	0.75	0.35
Shim thickness incl. oil baffle plate	mm	0.45	0.80	0.40
Shim thickness – difference = axial play	mm	0.05	0.05	0.05

23 31 001 Replacing Selector Forks

Remove and install transmission 23 00 020.
Remove and install/seal case cover 23 11 040.
Remove and install console for shift plates 23 31 210.
Pull shaft for 1st/2nd/5th gear selector forks out of case while still warm and lay selector forks aside. Remove gear assembly (23 22 001) to be able to replace 3rd/4th gear selector forks.

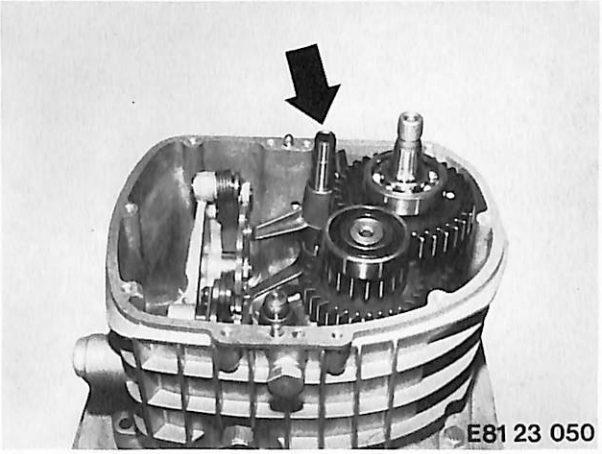
E81 23 050

23 31 210 Removing and Installing Console for Shift Plates

Remove and install transmission 23 00 020.
Remove and install/seal case cover 23 11 040.
Unscrew socket head screw (arrow) and pull out shift lever.

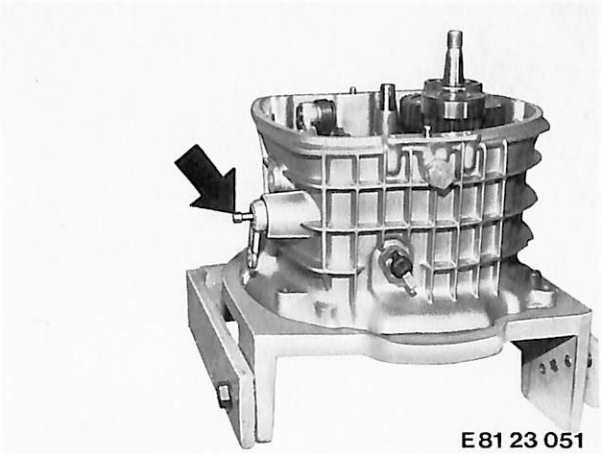
E81 23 051

Unscrew two console locating screws (arrows).
See Specifications for tightening torque.

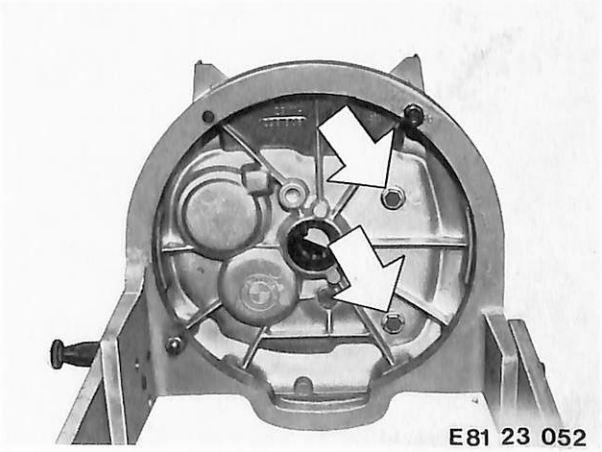
E81 23 052

Tilt console that selector forks are cleared. Remove console.

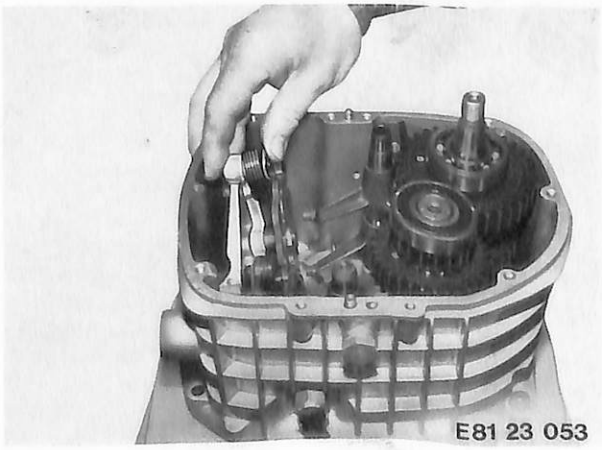
E81 23 053

23 31 861 Removing and Installing Shift Plates

Remove and install console 23 31 210.
Remove two circlips (arrows) holding the shift plates.

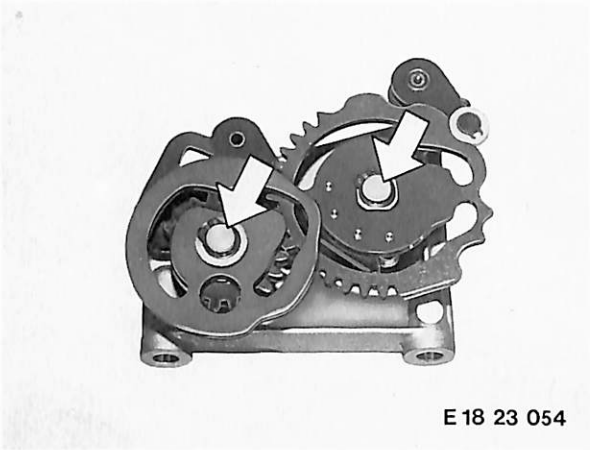

E 18 23 054

■

Note:
When assembling, make sure that the first teeth of the shift plates mesh with each other.

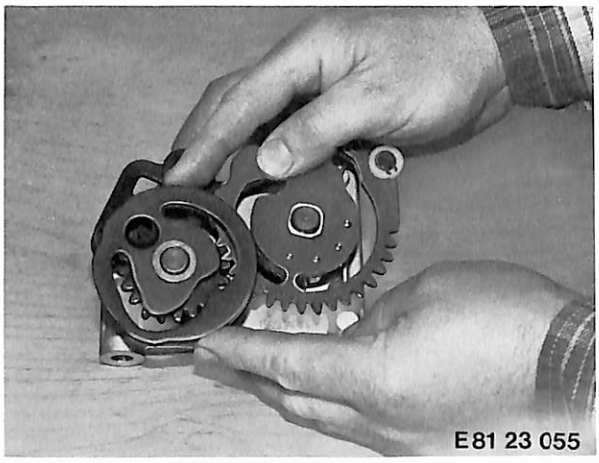

E 81 23 055

■

23 31 881 Removing and Installing Shift Controls

Remove and install shift plates 23 31 861.
Remove circlip (arrow) for shift element.

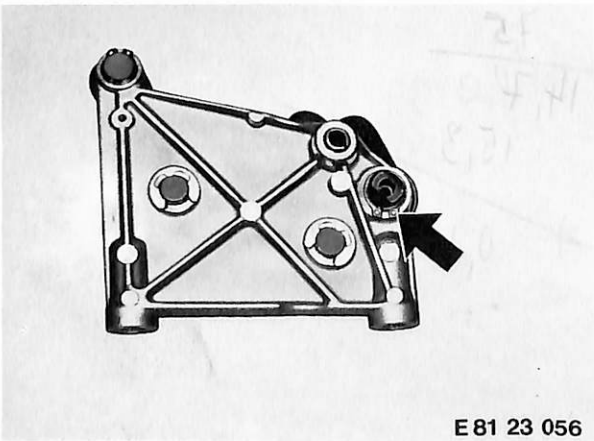

E 81 23 056

■

Remove complete shift element. Leave spring on console.

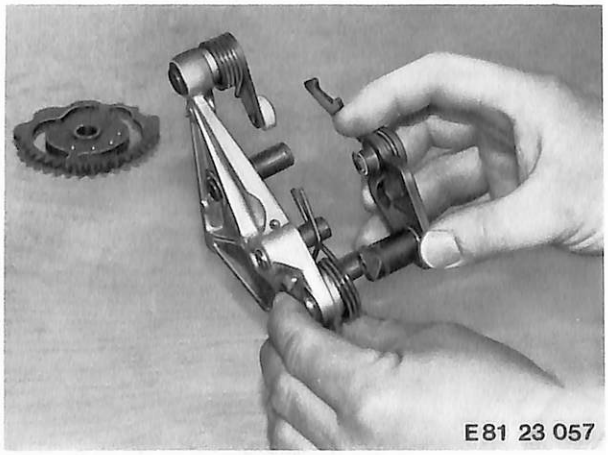

E 81 23 057

■

Remove circlip (1) for pawl. Pull element (2) off of pawl (3).

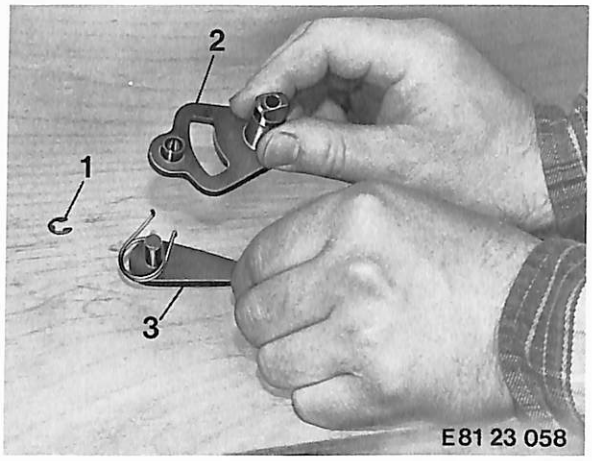

Remove circlip (arrow) for gear arrest and pull arrest out of console.

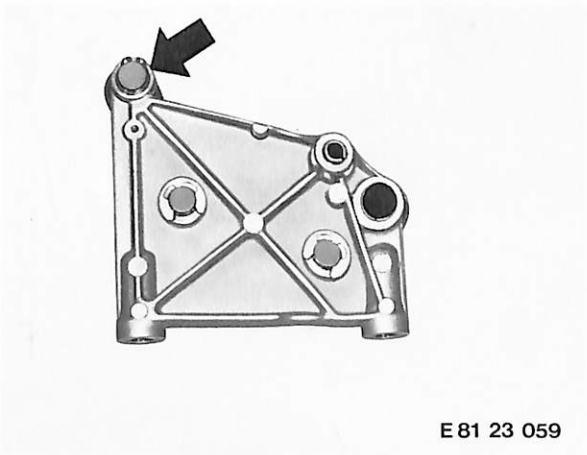

23 31 401 Removing and Installing Electric Idle Gauge

Transmission installed.
Unscrew left and right nuts on rear engine bolts. Pull out engine bolts.
Knock spacer (arrow) out of engine block with a plastic hammer.
Pull off wires and unscrew idle switch.

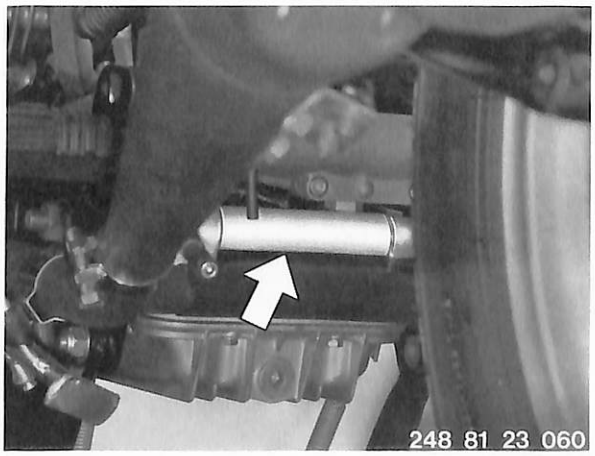

23 51 010 Removing and Installing Kickstarter

Remove and install/seal transmission case cover 23 11 040.

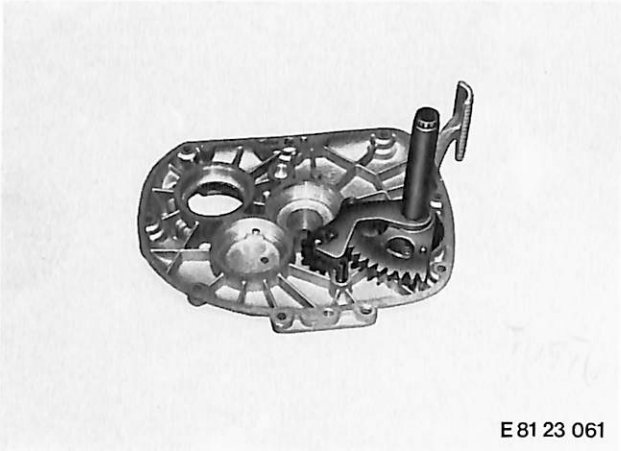

E 81 23 061

■

Remove circlip for connecting gear and pull connecting gear off of kickstarter shaft.

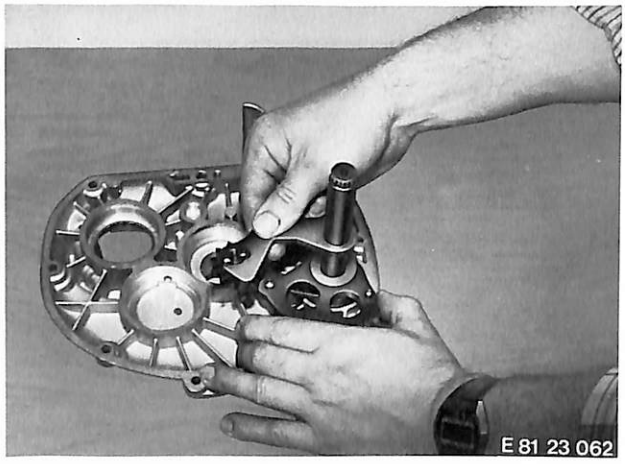

E 81 23 062

■

Unscrew wedge bolt on kickstarter lever and knock out with firm knocks from a hammer. Pull off lever.
Pull kickstarter shaft out of transmission cover.
See Specifications for tightening torque.

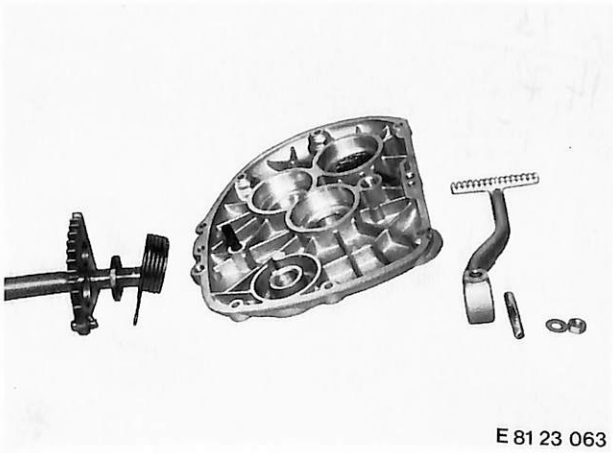

E 81 23 063

■

23 31 401 Replacing Electric Idle Indicator

1. Transmission Removed:

Remove and install transmission – 23 00 020.
Tilt transmission to one side and unscrew idle switch.

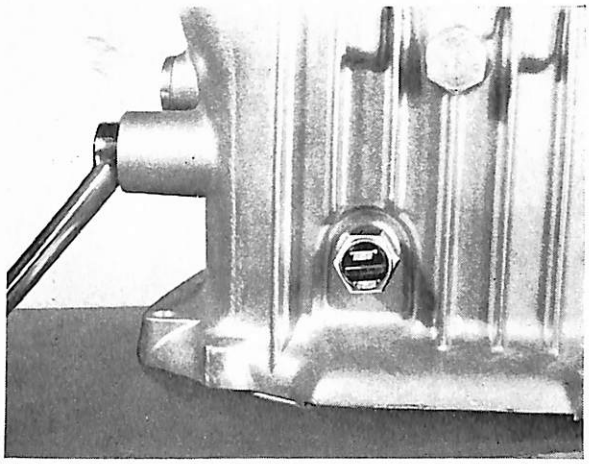

2. Transmission Installed:

Drain oil.

Unscrew nuts from rear engine bolts. Remove footrest and exhaust holder. Pull out engine bolts. Knock out spacer from engine block with a plastic hammer.

Pull off wires and unscrew idle switch.

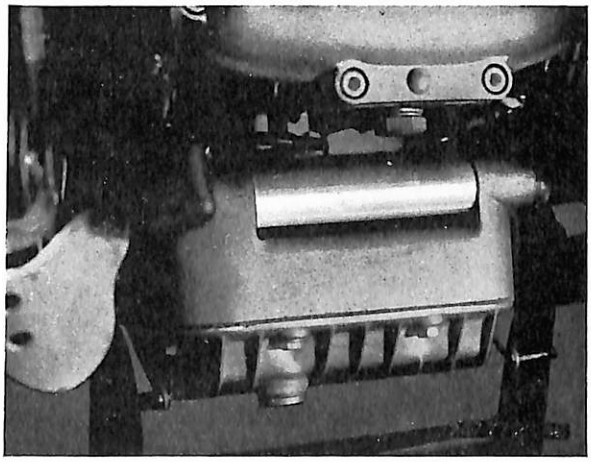

23 51 010 Removing and Installing Kick Starter (Optional Extra Equipment 58.4)

Remove and install/seal transmission case cover – 23 11 040.

Only perform the repair jobs described in the preparatory work when actually required.

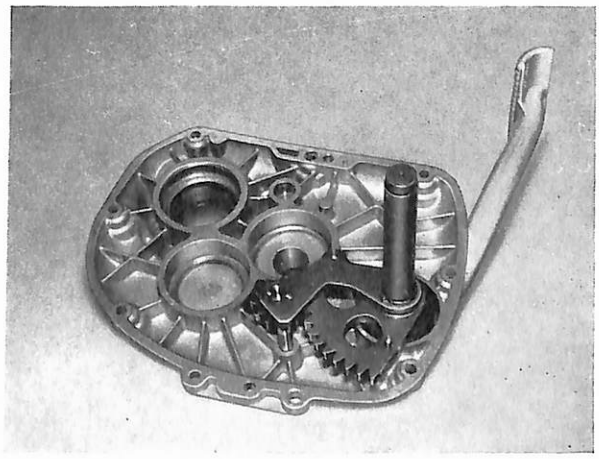

Remove circlip for intermediate gear and pull off intermediate gear from kick starter.

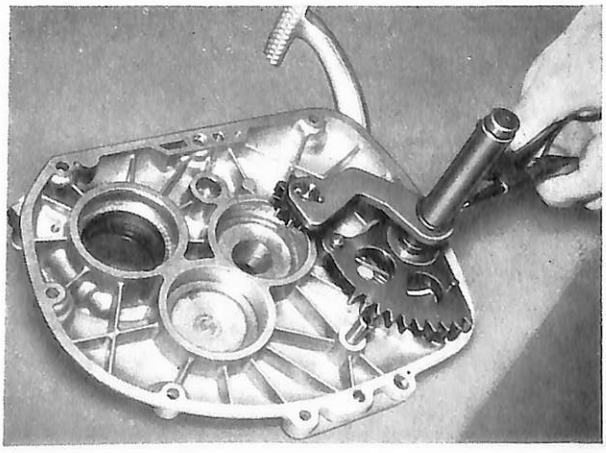

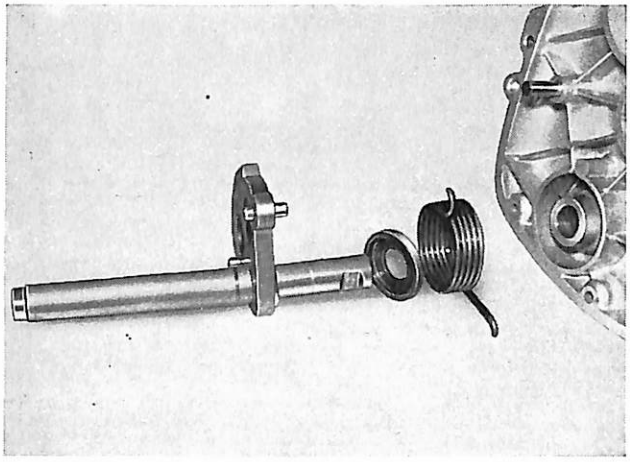

After loosening the screw for kick starter lever and removing same, remove kick starter with washer and spring from cover.

Troubeshooting Transmission

Condition	Cause	Correction
Transmission making noise	Bearings defective	Replace
	Selector forks grind	Inspect selector forks for signs of grinding, machine or replace
	Transmission shaft spacing incorrect	Re-space
	Gears making noise – incorrect axial or radial play	Check axial and radial play
Difficult shifts	Transmission shaft spacing insufficient	Re-space
	Pawl on large shift plate (from 1st, 2nd and 5th gears)	Align pawl
Difficult shifts when coasting	Transmission shafts wander	Re-space
Shift sticks	Burrs on shift cam, rough finish in journal guide	Machine or replace shift cam
	Selector fork seized on selector shaft, excessive play	Check or replace selector fork and shaft
Overshifting	Roller for arrest worn	Replace
	Spring preload for arrest insufficient	Check preload, replace spring if necessary
	Pawl bent	Straighten pawl
Clutch grabs	Input shaft spacing incorrect	Re-space

26 Propeller Shaft

Specifications . . . . . Page 26– 0/3
Specifications – 1981 models 26– 0/5
26 11 000 Propeller shaft – remove and install 26–11/1

Propeller Shaft

Specifications

Model	R 65
Arrangement	Sealed propeller shaft with torsional abosorber in right control arm tube, universal joint running on needle bearing at transmission end and hypoid tooth clutch bell housing on drive end.
Oil grade above 5° C (41° F) below 5° C (41° F)	brand name hypoid gear lube SAE 90 brand name hypoid gear lube SAE 80
Oil volume in ltr. (pints)	0.15 (0.3)

Torque Values in Nm (ft lbs)

Twelve-sided head bolt	38^{+4} (27^{+3})

Tighten all other bolts and nuts to common torque values as listed in tables from bolt/nut suppliers or the new BMW Standard 60002.0.

Propeller Shaft

Specifications 1981 Models

Model	R 65	R 65 LS
Arrangement	Sealed propeller shaft with torsional abosorber in right control arm tube, universal joint running on needle bearing at transmission end and hypoid tooth clutch bell housing on drive end.	
Oil grade above 5° C (41° F) below 5° C (41° F)	brand name hypoid gear lube SAE 90 brand name hypoid gear lube SAE 80	API-Classification GL 5
Oil volume in ltr. (pints)	0.15 (0.3)	

Torque Values in Nm (ft lbs)

Twelve-sided head bolt	40 (29)

Tighten all other bolts and nuts to common torque values as listed in tables from bolt/nut suppliers or the new BMW Standard 60002.0.

Propeller Shaft with Torsion Damper

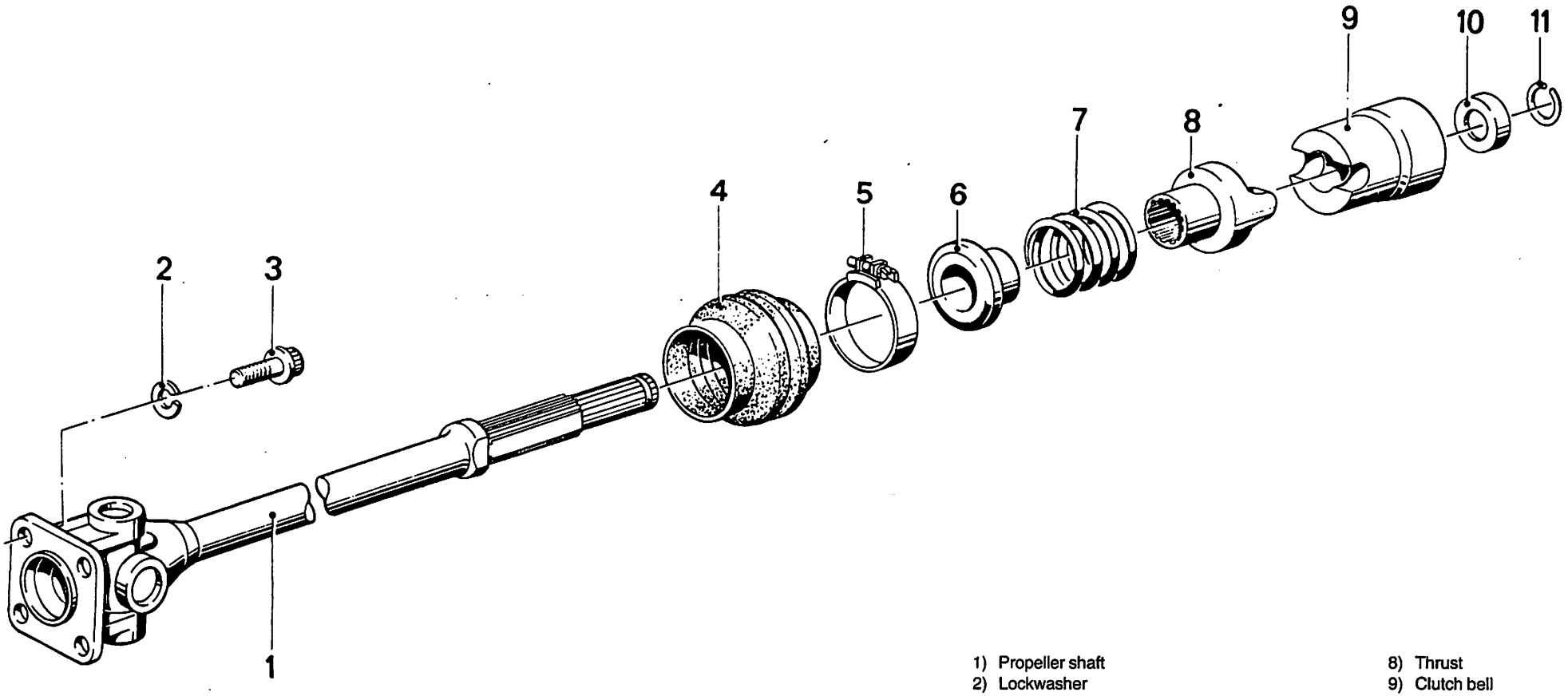

1) Propeller shaft
2) Lockwasher
3) Multiple-tooth head screw
4) Rubber cover
5) Clamp
6) Adapter
7) Spring
8) Thrust
9) Clutch bell
10) Ring
11) Snap ring

26 11 00 Removing and Installing Propeller Shaft

Remove rear wheel control arm – 33 17 350.
Clamp assembly fixture, BMW No. 26 17 00, in a vise and place control arm in fixture.

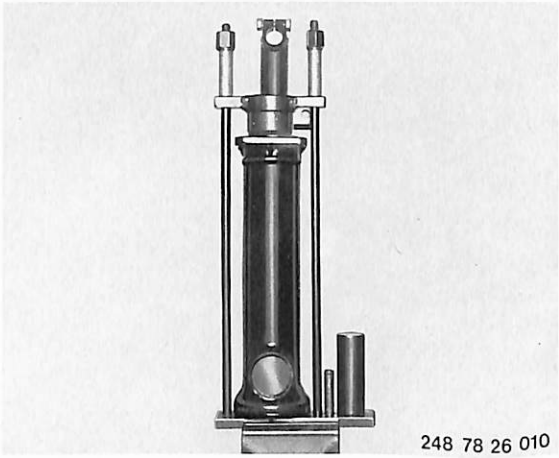
248 78 26 010

Run a mandrel through long groove and lift out snap ring. Relax assembly fixture slowly.

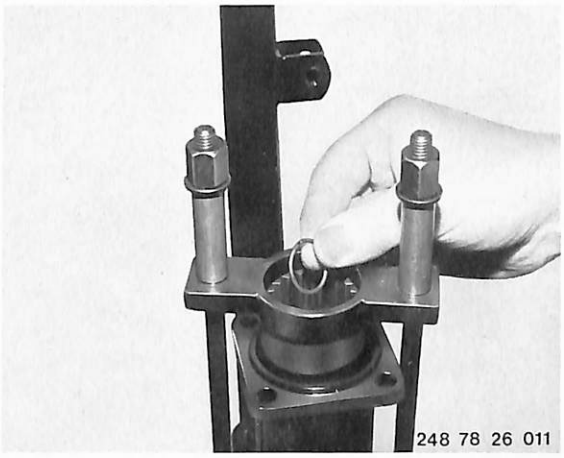
248 78 26 011

Remove control arm from fixture. Pull out propeller shaft and components from arm beam.

1 Propeller shaft
2 Pressure pad
3 Spring
4 Counterpart
5 Clutch bell housing
6 Ring
7 Snap ring

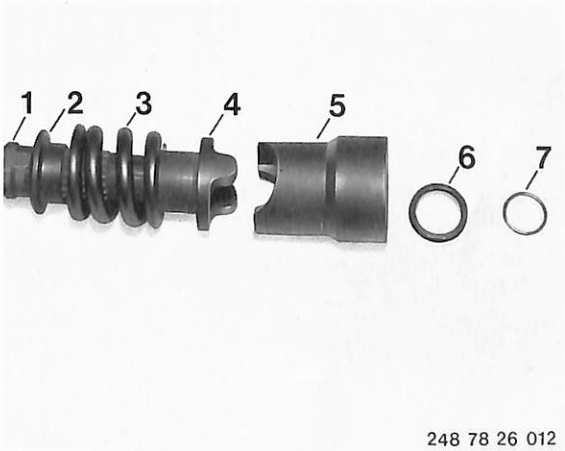

248 78 26 012

Check universal joint for wear; determine radial play by turning flange and propeller shaft alternately, and axial play by moving axially.
If necessary, replace propeller shaft.

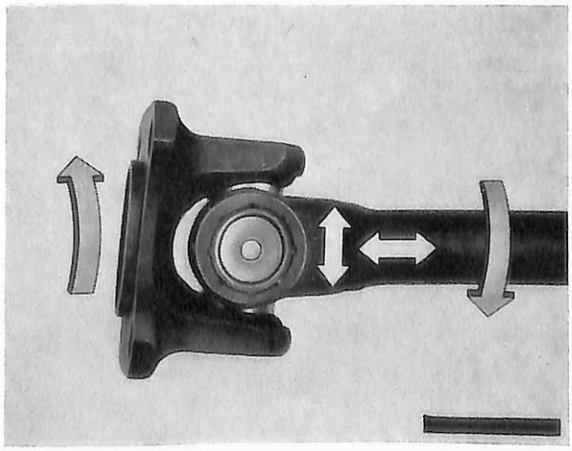

31

31 Front Wheel Fork

Specifications		Page 31– 0/3
Specifications – 1981 models		31– 0/5
31 42 009	Telescope fork – check	31–42/1
31 42 100	Telescope fork – remove and install	31–42/2
31 42 103	Telescope fork – disassemble and assemble	31–42/5
	Telescope fork – troubleshoot	31–42/7

Front Axle

Specifications

Model	R 65
Wheel bearing lubrication	Brand name multi-purpose grease with drip point of 180° C (355° F)
Front wheel caster in mm (in.)	approx. 96 (3.779) – not adjustable –
Steering lock	approx. 42° to each side
Front wheel fork lock angle	42°
Spring travel in mm (in.)	175 (6.890)
Installed length (measured from upper edge of support tube to machined surface on lower fork guide) in mm (in.)	190 (7.480)
Fork spacer tube	hard chrome-plated
Fork sliding tube	cast aluminum
Lower fork bridge	forged aluminum
Oil volume per fork beam in ltr. (pints) (at oil change)	0.190 (0.4)
Oil grade	Shock absorber oil; Shell 4001, Shell Aero Fluid 4, BP Aero Hydraulic 1, Castrol DB Hydraulic Fluid 1–318, Aral P 3441, Aral 1010, BP Olex HLP 2849, Mobil Aero HFA, Mobil DTE 11
Telescope fork spacer tube (hard chrome plated) outside dia. in mm (in.)	$36^{-0.050}_{-0.075}$ ($1.4173^{-0.0020}_{-0.0029}$)
Fork sliding tube inside dia. in mm (in.)	$36^{+0.025}_{0}$ ($1.4173^{+0.0010}_{0}$)
Running clearance of fork sliding tube to fork spacer tube, max., in mm (in.)	0.05 . . . 0.1 (0.002 . . . 0.004)

Front Axle

Specifications

Model	R 65
Piston on absorber tube, outside dia. in mm (in.)	$27.7_{-0.17}$ ($1.090_{-0.007}$)
Fork spacer tube inside dia. in mm (in.)	28±0.15 (1.102±0.006)
Running clearance of piston in fork spacer tube in mm (in.)	0.15 . . . 0.62 (0.006 . . . 0.024)
Relaxed fork spring length in mm (in.)	490^{+12} ($19.291^{+0.472}$)
Fork spring wire gage dia. in mm (in.)	4.25 (0.167)

Torque Values in Nm (ft lbs)

End plug	80 + 10 (59 + 7.3)	Absorber in sliding tube screw	35 ± 5 (26 ± 3.6)
Lower fork bridge bolts	40 + 5 (29 + 3.6)	Guard bracket to sliding tube	20 . . . 25 (15 . . . 18)
		Axle clamping bolt	15 + 2 (11 + 1.4)

Tighten all other bolts and nuts to common torque values as listed in tables from bolt/nut suppliers or the new BMW Standard 60002.0.

Specifications – 1981 Models

Model	R 65	R 65 LS
Wheel bearing lubrication	Brand name bearing grease, application temperature range −30° C . . . + 140° C, drip point 150° . . . 230° C, high corrosion inhibition, good water/oxidation resistance, e. g. Shell Retinax A	
Front wheel caster in mm (in.)	approx. 96 (3.779) – not adjustable	
Steering lock	approx. 42° to each side	approx. 35° to each side
Front wheel fork lock angle	42°	
Spring travel in mm (in.)	175 (6.890)	
Installed length (measured from upper edge of support tube to machined surface on lower fork guide) in mm (in.)	190 (7.480)	
Fork spacer tube	hard chrome plated	
Fork sliding tube	cast aluminium	
Lower fork bridge	forged aluminium	
Oil volume per fork beam in ltr. (pints) (for oil change)	0.190 (0.4)	
Oil grade	Shell 4001; Shell Aero fluid 4; Castrol DB Hydraulic Fluid; Castrol Shock Absorber Oil Extra Light; Castrol LHM (preferrably below 0° C); Aral P 3441; Aral 1010; Mobil Aero HFA; Mobil DTE 11; Esso UNIVIS J 13; BP Aero Hydraulic; BP-Olex HLP 2849	
Telescope fork spacer tube (hard chrome plated) outside dia. in mm (in.)	$36^{-0.050}_{-0.075}(1.4173^{-0.0020}_{-0.0029})$	
Fork sliding tube inside dia. in mm (in.)	$36^{+0.025}_{0}(1.4173^{+0.0010}_{0})$	
Running clearance of fork sliding tube to fork spacer tube, max. in mm (in.)	0.05 . . . 0.1 (0.002 . . . 0.004)	

Front Axle

Specifications 1981 Models

Model	R 65	R 65 LS
Piston on absorber tube, outside dia. in mm (in.)	$27.7_{-0.17}$ ($1.090_{-0.007}$)	
Fork spacer tube inside dia. in mm (in.)	28±0.15 (1.102±0.006)	
Running clearance of piston in fork spacer tube in mm (in.)	0.15 . . . 0.62 (0.006 . . . 0.024)	
Relaxed fork spring length in mm (in.)	490^{+12} ($19.291^{+0.472}$)	
Fork spring wire gage dia. in mm (in.)	4.25 (0.167)	

Torque Values in Nm (ft lbs)

End plug	80 + 10 (59 + 7.3)	Absorber in sliding tube screw	35 ± 5 (26 ± 3.6)
Lower fork bridge bolts	40 + 5 (29 + 3.6)	Guard bracket to sliding tube	20 . . . 25 (15 . . . 18)
Oil filler plugs	9 (6.5)	Axle clamping bolt	15 + 2 (11 + 1.4)
Oil drain plugs	8 (5.8)		

Tighten all other bolts and nuts to common torque values as listed in tables from bolt/nut suppliers or the new BMW Standard 60002.0.

Front Wheel Fork

1) Fork bridge, upper
2) Cover
3) Fillister head screw
4) Seal
5) Snap ring
6) Spring damper
7) O-ring
8) Fork spacer tube
9) Fork bridge, lower
10) Hose holder
11) Washer
12) Hexagon head bolt
13) Ring
14) Taper roller bearing
15) Round nut
16) Plug
17) Absorber tube mount
18) Ring
19) Valve housing
20) Valve disc
21) Perforated ring
22) Stop ring
23) Absorber tube
24)
25) Spring
26) Guide tube
27) Seal
28) Dust cover
29) Felt pad
30) Base
31) Hexagon nut
32) Washer
33) Fillister head screw
34) Hose holder
35) Hexagon head screw
36) Seal
37) Type reflector
38) Fillister head screw
39) Washer
40) Hexagon nut
41) Seal
42) Fillister head screw

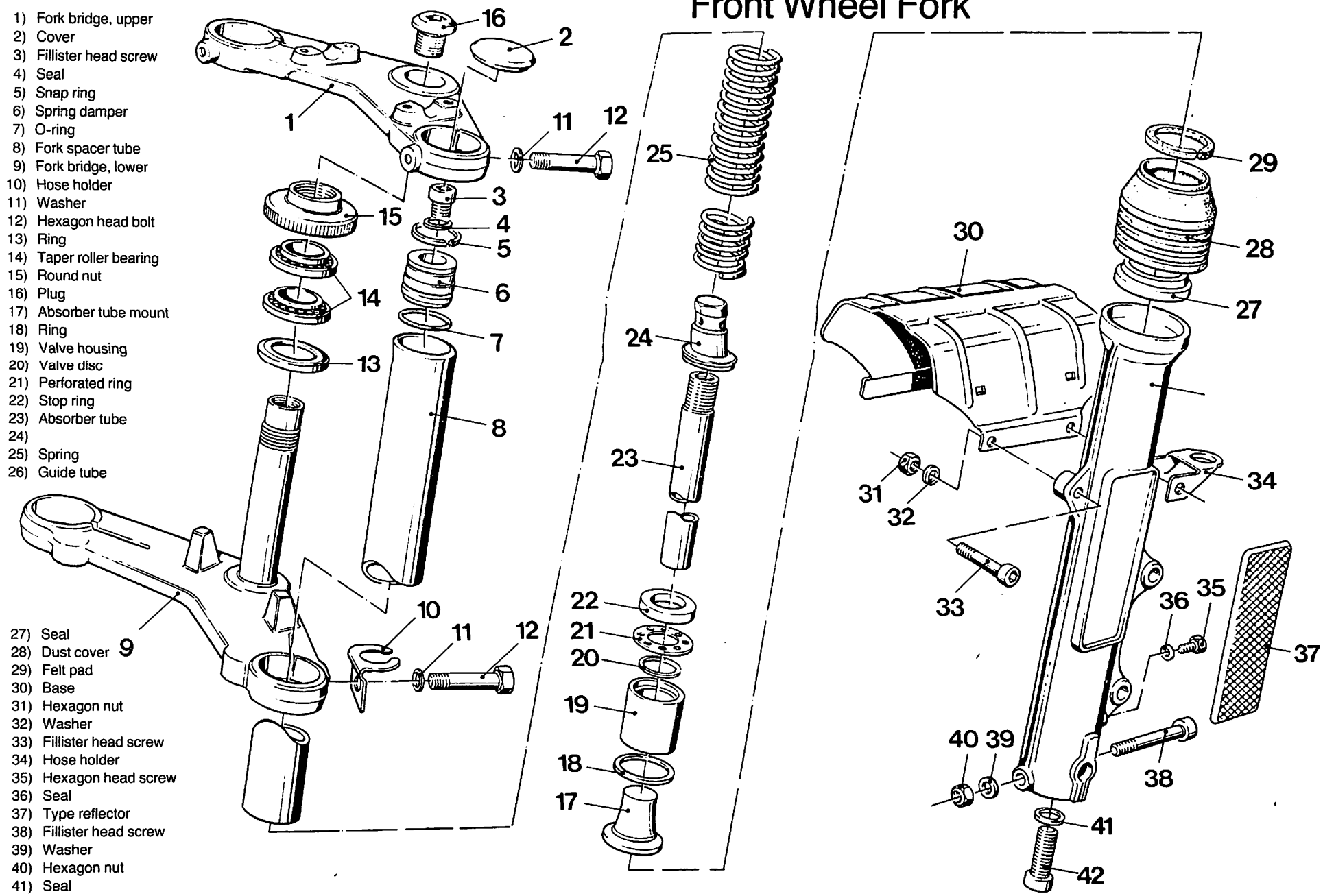

31 42 009 Checking Telescope Fork

Remove and install telescope fork 31 42 100.
Disassemble telescope fork 31 42 103.
A thorough inspection of the fork bridge at bottom, stand tubes and sliding tubes for cracks will be necessary in particular when the fork is damaged.

Check removed spacer tubes resting on both ends in vee-blocks or similar for runout.
See Specifications for permissible runout value.

Important!
Never straighten bent spacer tubes – danger of breaking!

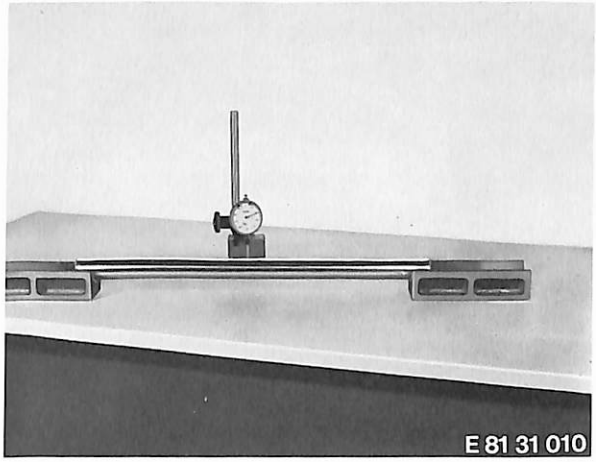

Push in two new spacer tubes to inspect the lower fork bridge (190 mm installed test lenght for tubes, as measured from spacer tube upper edge to fork bridge).

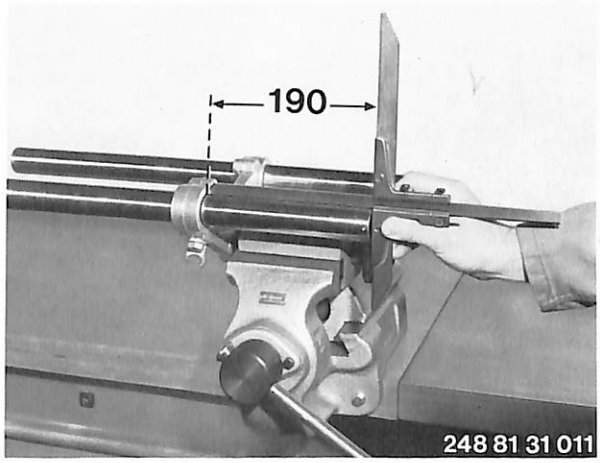

Place two steel rulers, BMW No. 31 4 620, on ends of fork spacer tubes and check for distortion.

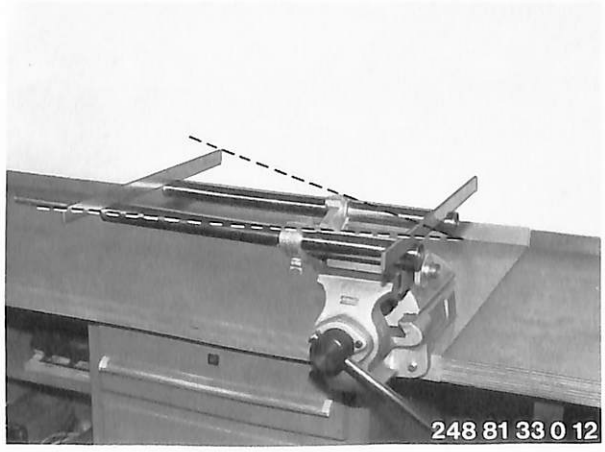

Check spacer tubes for deviation from parallel with a caliper gauge. Check alignment between fork guide tube and spacer tubes. It should be possible to easily push upper fork bridge on spacer tubes and fork guide tube simultaneously.

31 42 100 Removing and Installing Telescope Fork

Remove and install front wheel – 36 30 300.
Remove and install front wheel fender – 46 61 000.
Remove and install steering tube – 32 71 000.
Remove and install brake caliper – 34 11 000.
Loosen screws (arrows) for left spacer on upper and lower fork bridge, and pull out spacer with slide downward.

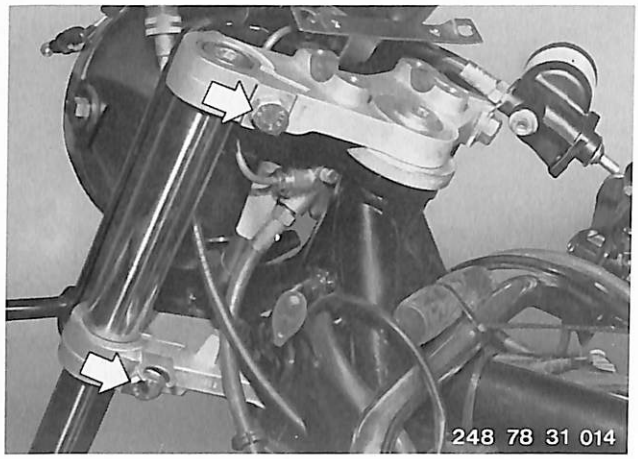

■

Unscrew instrument carrier mounting screws (arrows) at top left and right, as well as coupling nut for speedometer cable.

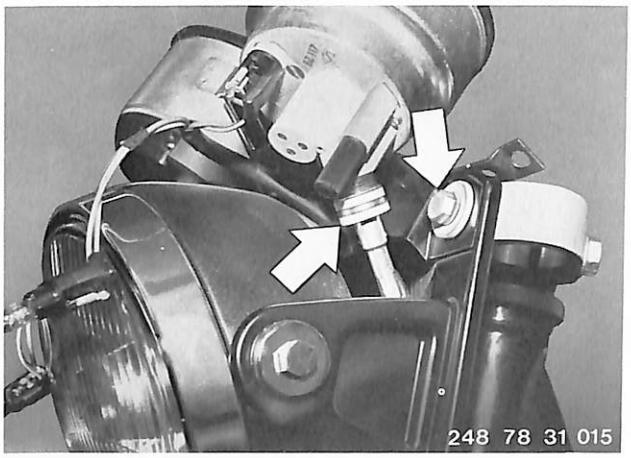

■

Unscrew mounting screws from lower fork bridge (arrow).

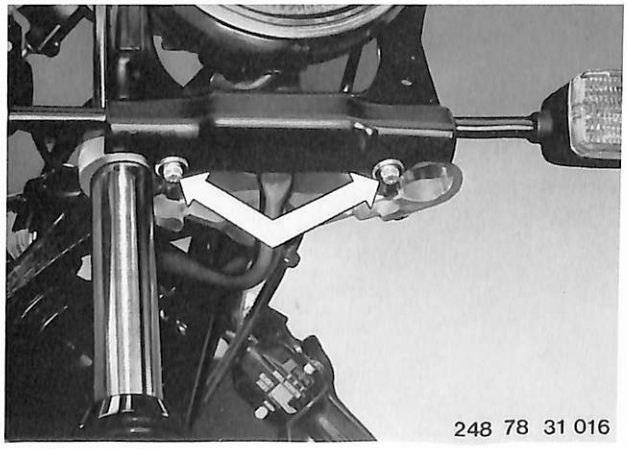

■

Pull instrument carrier toward side over lower fork bridge and let it hang down.

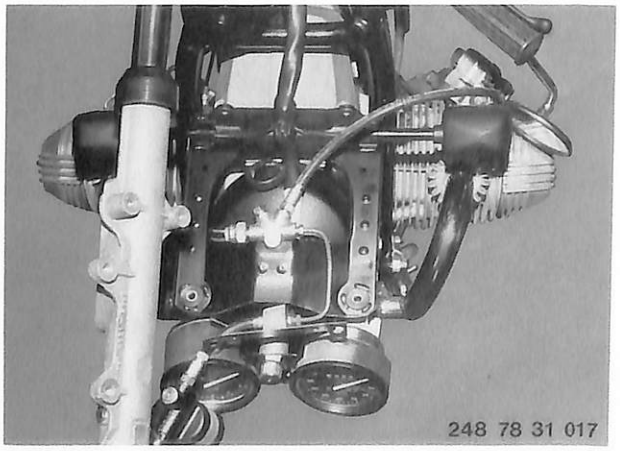

■

Unscrew screw from upper fork bridge (1) on right side and plug (2), and remove upper fork bridge.

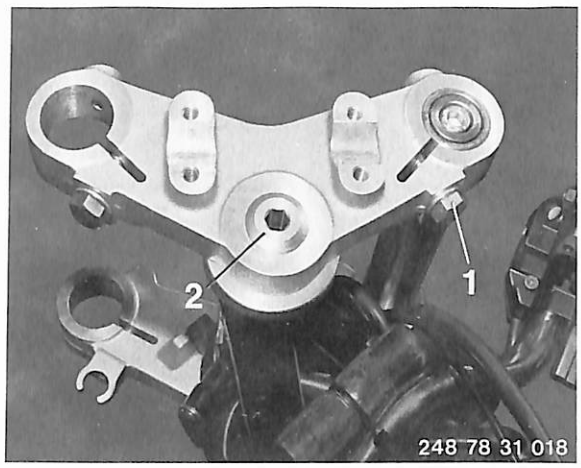

Unscrew wheel nut by hand and pull out lower fork bridge from control head by applying light knocks against fork guide tube.

The upper and lower taper roller bearing outer races remain in frame.

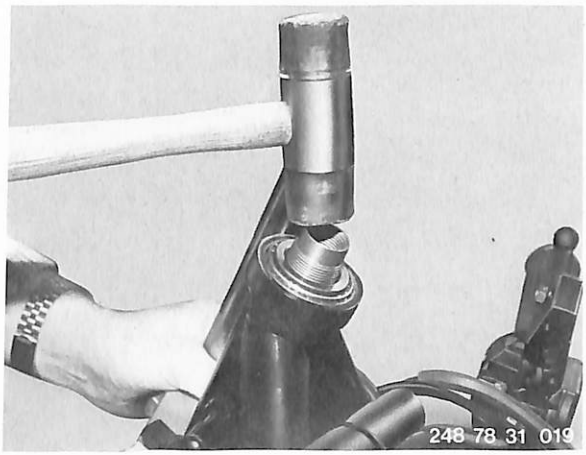

Outer races are removed for replacement with a Kukko puller, BMW No. 00 5 560, used together with a support, BMW No. 31 4 800.

Installation Note! Knock in new bearing shell with old shell!

Pull in new outer races one after the other in conjunction with the spindle or frame gauge and spacer, BMW No. 31 4 820.

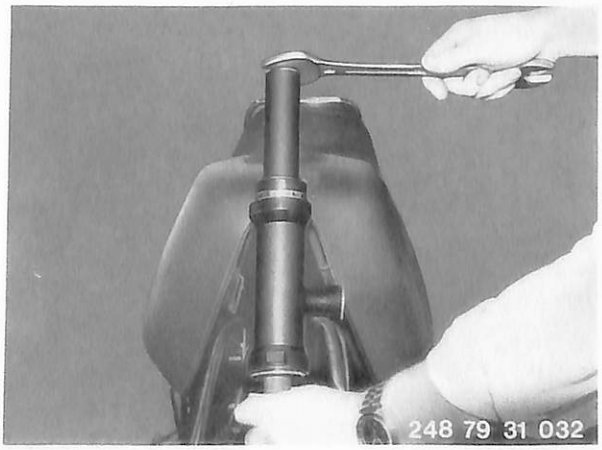

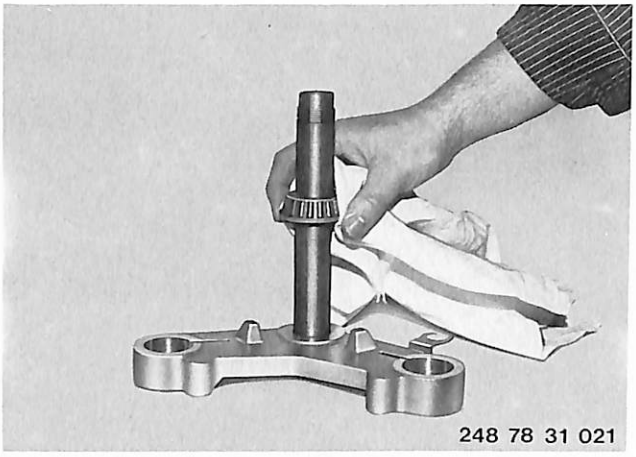

To install forks in control head, first install heated upper taper roller bearing and than push lower fork bridge with control tube into frame from below carefully. Screw on wheel nut and tighten by hand to remove bearing play.
Install right spacer in lower fork bridge (190 mm/7 1/2" above upper edge of fork bridge).
Mount upper fork bridge and tighten screw to torque.

Installation Note! Lubricate bearing shells and taper roller bearings well prior to installation.

■

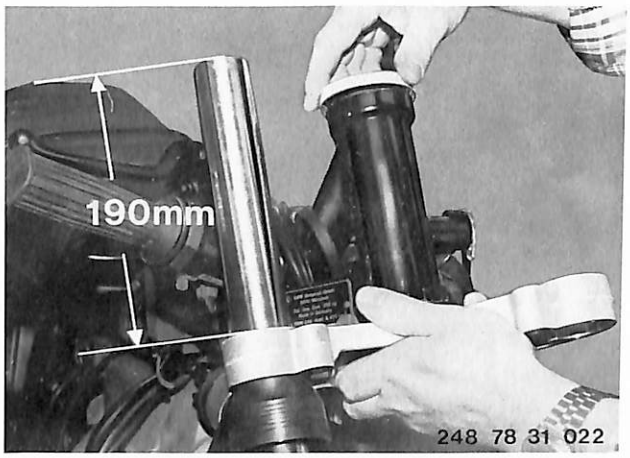

Bolt instrument carrier to upper and lower fork bridge. Push left spacer with slide into fork bridge from below and make initial adjustment with help of stub axle. After installation of front wheel and loosening of left bolts again as well as bottoming the springs several times, retighten the fork bolts.

■

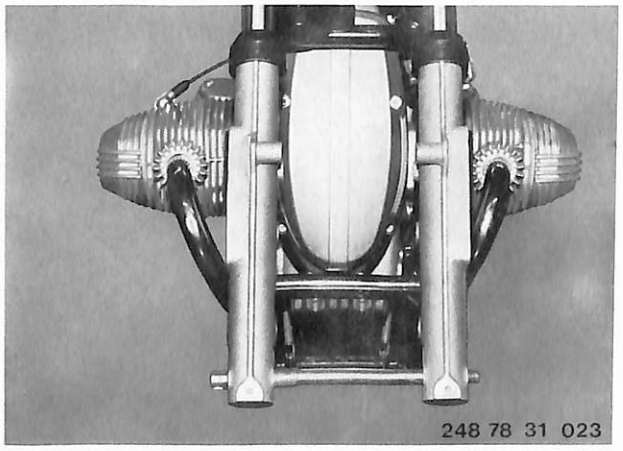

Bolt instrument carrier to upper and lower fork bridge. Push left spacer with slide into fork bridge from below and make initial adjustment with help of stub axle. After installation of front wheel and loosening of left bolts again as well as bottoming the springs several times, retighten the fork bolts.

■

31 42 103 Disassembling Telescope Fork

Remove and install telescope fork – 31 42 100.
Install left spacer with slide in fork bridge again.
Clamp fork in a vise, using wood, BMW No. 31 4 600.
(Have slides face down slightly.)

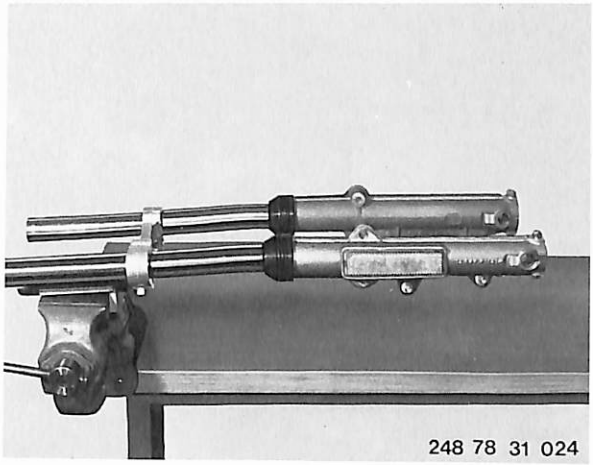
248 78 31 024

Use fixture, BMW No. . . .
to press spring retainer against spring into spacer tube to depth of approx. 50 mm (2").

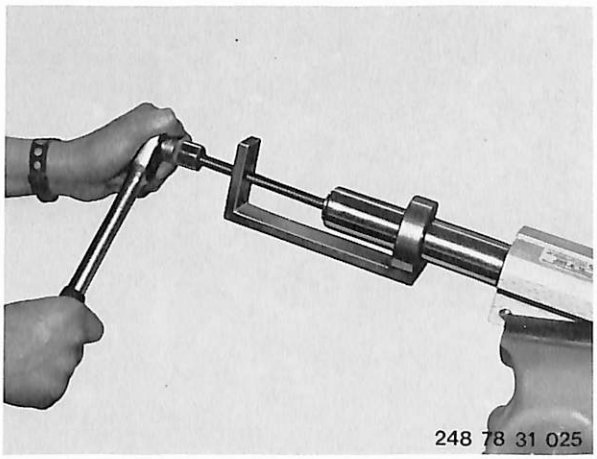
248 78 31 025

Knock out snap ring from seat on split side with belzerite hammer and screwdriver. Position upright and pull out by hand.
Release fixture and remove spring retainer.

Installation Note! Replace O-ring on spring retainer each time disassembly takes place.

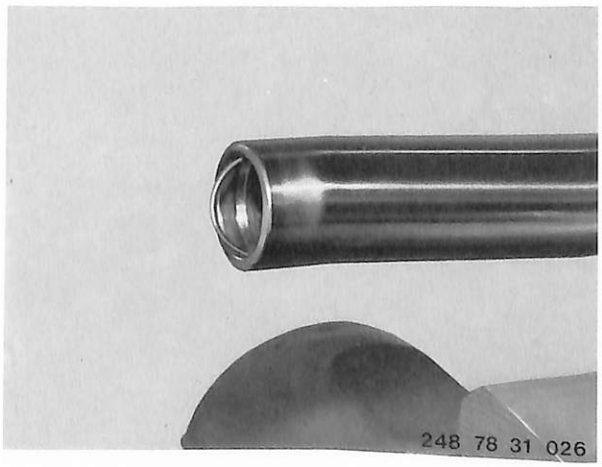
248 78 31 026

Drain fork oil.
Unscrew bolts for stub axle, loosen bottom screws of slide tubes with a socket wrench and pull off slide tubes.

Note! When turning bottom screws with a double extension and size 13 socket, counterhold absorber on inside in spacer tube.

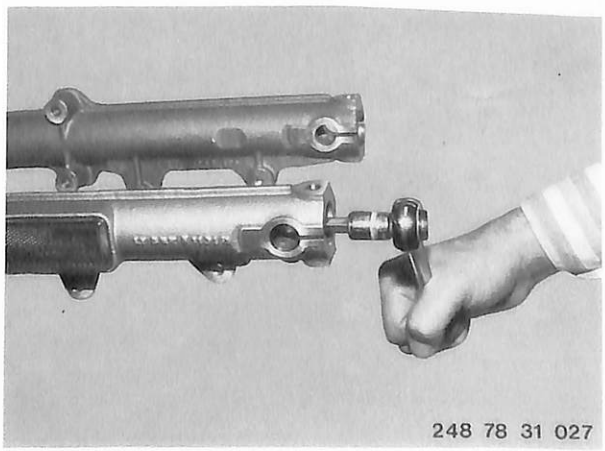
248 78 31 027

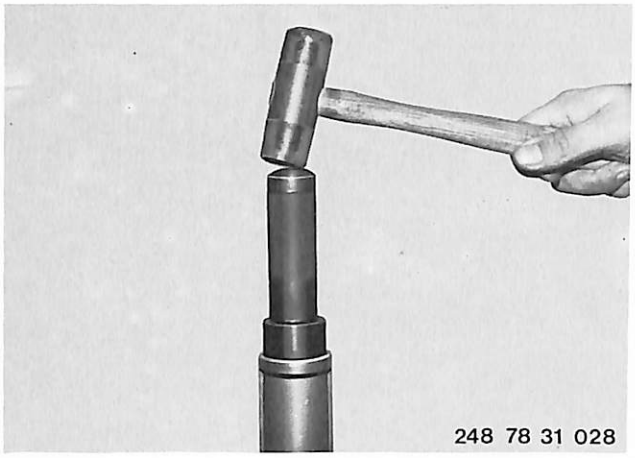

Pull off fork cover and lift out seal in slide tube with a screwdriver carefully.
Knock in new seal with a mandrel, BMW No. 31 4 650.

■

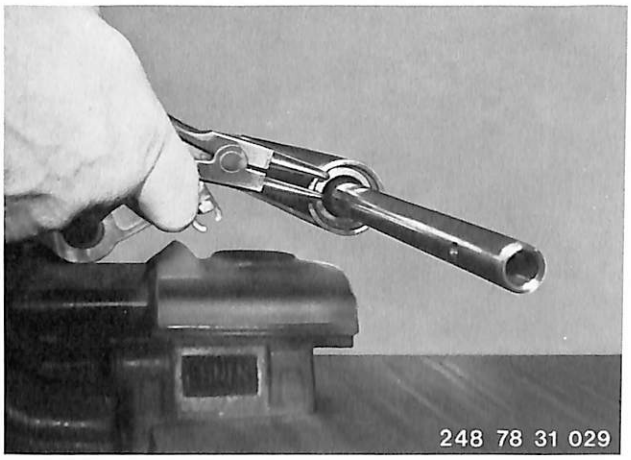

Remove circlip in spacer tube with special pliers and pull out entire absorber from spacer tube.

■

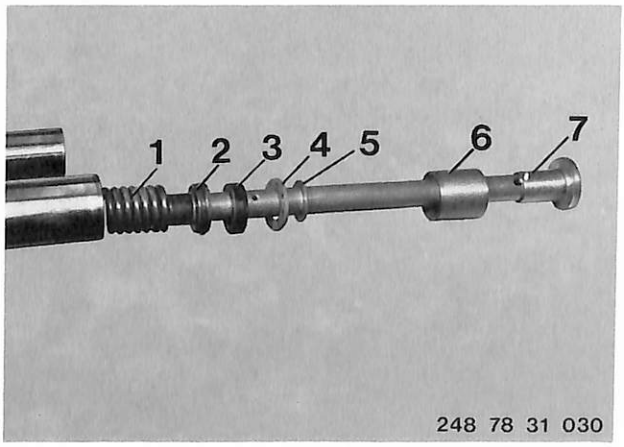

1 Spring
2 Absorber
3 Stop ring
4 Perforated plate
5 Distributor plate
6 Valve body
7 Guide

■

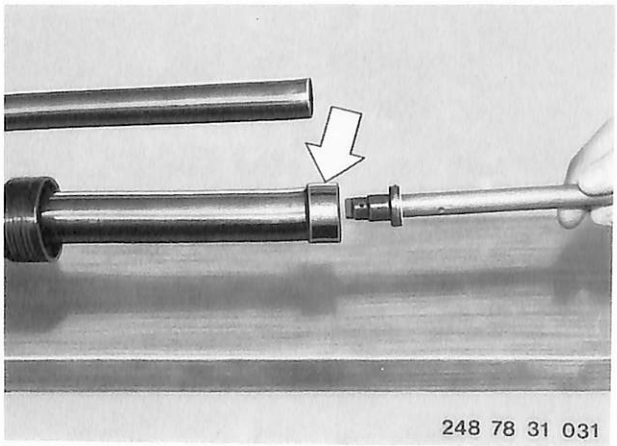

Use guide sleeve, BMW No. 31 4 720, (arrow) to compress piston rings when installing absorber in the spacer tube.
Push stop ring through guide sleeve into the spacer tube with a thin mandrel.

■

Trouble-shooting – front forks

Fault	Cause	Remedy
Forks do not compress easily ('stiction') or seize	Forks distorted	Release all bolts at sheet-metal pressing and quick-release axle, and check pressing for distortion; compress the forks fully and tighten bolts to specified torques
Rattling sound when forks are compressed several times in rapid succession	Damping valve touching piston	Insert a rubber washer between these components (see S.I.)

32

32 Steering

Specifications . . . . . Page 32– 0/3
Specifications – 1981 models 32– 0/5
32 00 454 Steering – adjust 32–00/1
32 71 000 Steering tube – remove and install 32–71/1
32 73 030 Throttle cable – remove and install 32–73/1
32 73 030 Throttle cable – remove and install (1981 models) 32–73/2

Steering

Specifications

Model	R 65
Steering lock	42° to each side
Handlebar width in mm (in.)	650 (25.590)
Steering tube dia. in mm (in.)	22 (0.866)

Torque Values in Nm (ft lbs) + Friction Values in Ncm (in lbs)

End plug	80 + 10 (59 + 7.3)
Steering bearing	350 ± 20 Ncm

Tighten all other bolts and nuts to common torque values as listed in tables from bolt/nut suppliers or the new BMW Standard 60002.0.

Specifications 1981 Models

Model	R 65	R 65 LS
Steering lock	approx. 42° to each side	approx. 35° to each side
Handlebar width in mm (in.)	650 (25.590)	
Steering tube dia. in mm (in.)	22 (0.866)	

Torque Values in Nm (ft lbs) + Friction Values in Ncm (in lbs)

End plug	80 + 10 (59 + 7.3)
Steering bearing	without play

Tighten all other bolts and nuts to common torque values as listed in tables from bolt/nut suppliers or the new BMW Standard 60002.0.

Throttle Twist Grip and Brake Master Cylinder

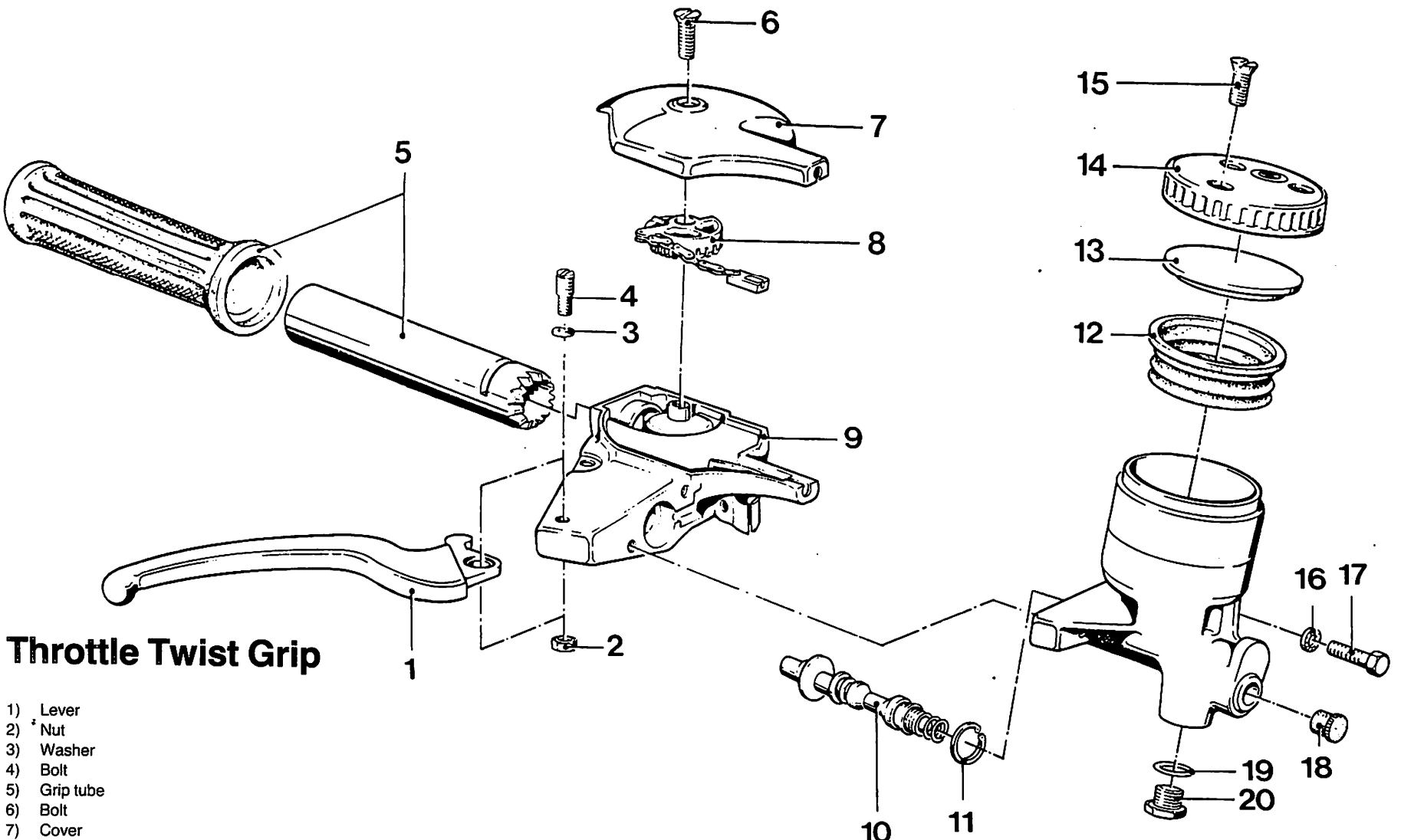

Throttle Twist Grip

1) Lever
2) Nut
3) Washer
4) Bolt
5) Grip tube
6) Bolt
7) Cover
8) Cam
9) Housing

32 00 454 Adjusting Steering

Detach instrument trim (arrows).

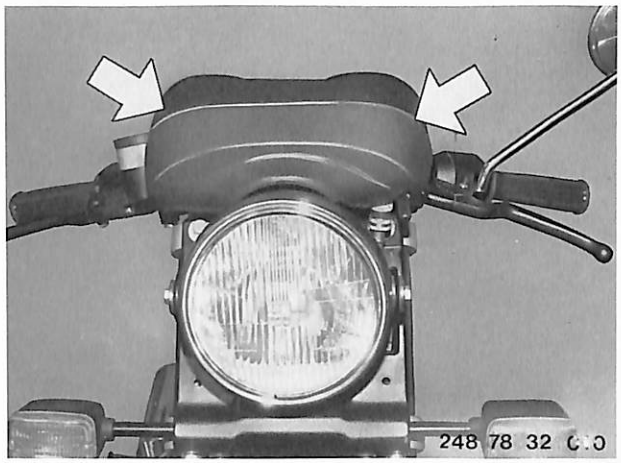

Unscrew round nut from ignition lock (with circlip pliers). Pull out holders of turn signal indicator lamps and remove instrument trim.

Loosen end bolt (1), loosen round nut (2), release bearing with an impact knock, tighten round nut by hand, tighten end bolt to specified tightening torque – see Specifications.

Adjust control head bearing without play.

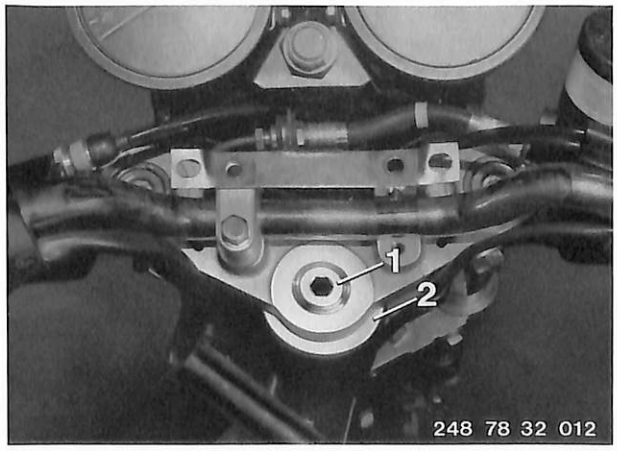

When control head bearing has been adjusted correctly, the handlebar of a motorcycle on its stand should just fall against the right stop on its own.

32 71 000 Removing and Installing Steering Tube

Remove and install cockpit upper section (only R 65 LS) 46 63 025.

Unscrew one each phillips head screw on left and right sides of instrument housing (arrows).
Take off shield.

Pull holders of turn signal indicator lamps with wires out of instrument housing.

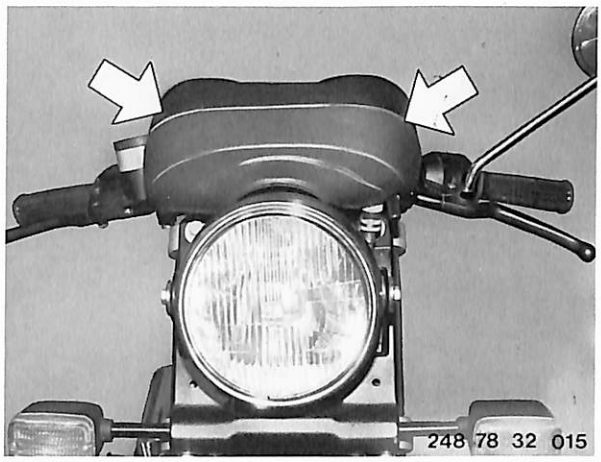

Unscrew ignition lock screw with circlip pliers and remove instrument trim upward.

Unscrew 2 handlebar mounting screws (arrows).

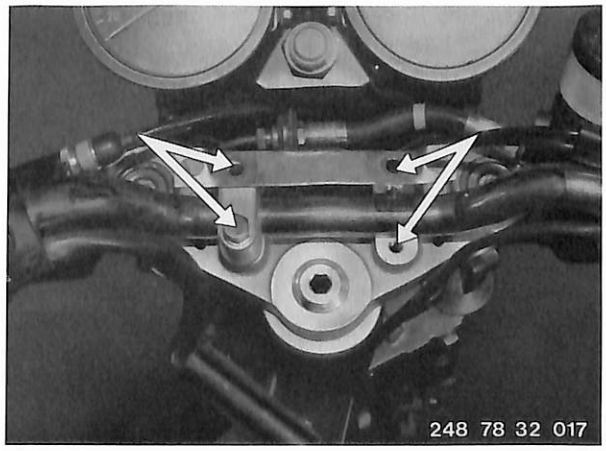

Unscrew 2 socket head screws holding brake master cylinder on throttle grip (arrows).
Remove accelerator cables – 32 73 030.
Remove clutch cable – 32 73 000.
Place handlebar tube on fuel tank, using a soft liner

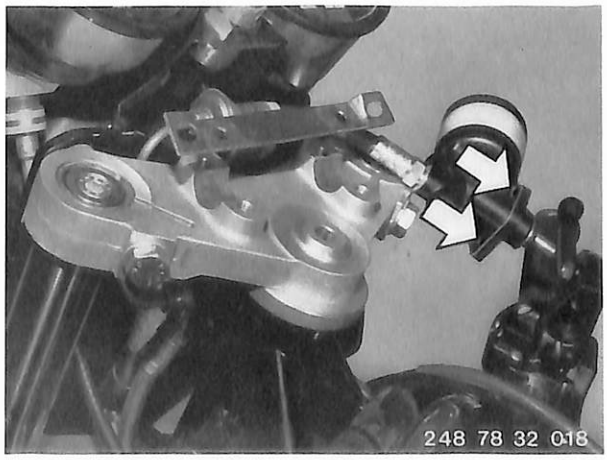

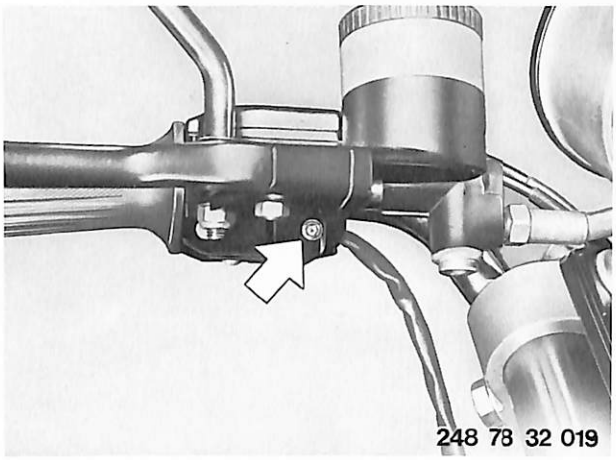

Unscrew socket head screw (arrow) on right side of housing for throttle twist grip and brake lever, and pull off complete housing.

■

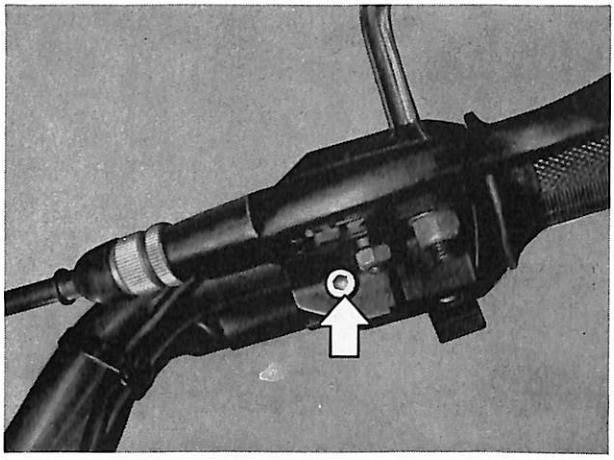

Pull off left handlebar grip. Apply compressed air to grip through handlebar tube from right side. Unscrew socket head screw (arrow) from housing and pull off instrument from handlebar tube.

■

32 73 030 Removing and Installing Throttle Cable (1981 Models)

Remove seat and fuel tank 16 11 030.

Push back water protection cap on cable. Unscrew accelerator cable cover and disconnect cable on chain (arrow).

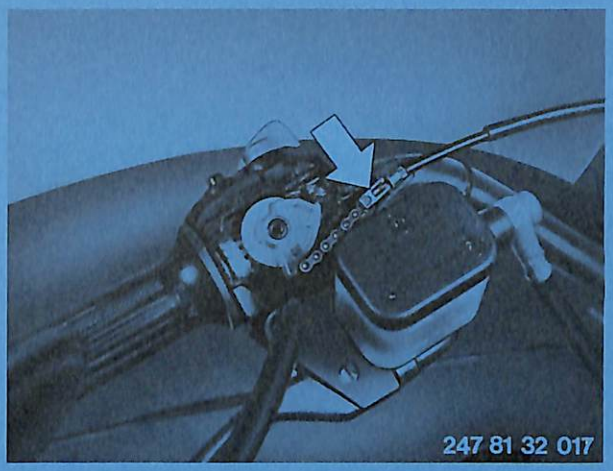

Installation:

Lubricate adjusting cam and spline on throttle twist grip with grease before assembling. When assembling, make sure mark on tooth of throttle twist grip is aligned with mark on adjusting cam.

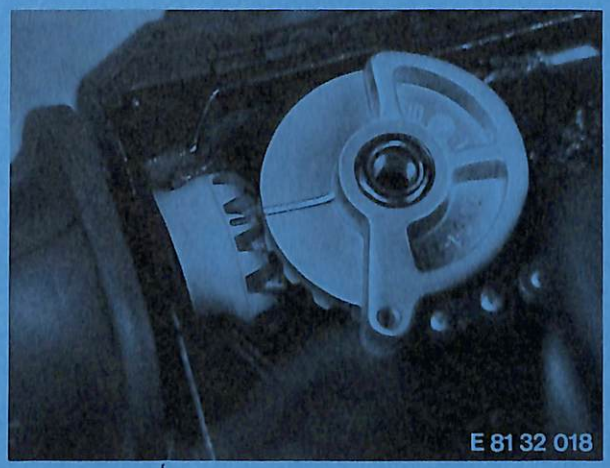

Unscrew lock nut (1) of adjusting screw on distributor and tighten adjusting screw fully.

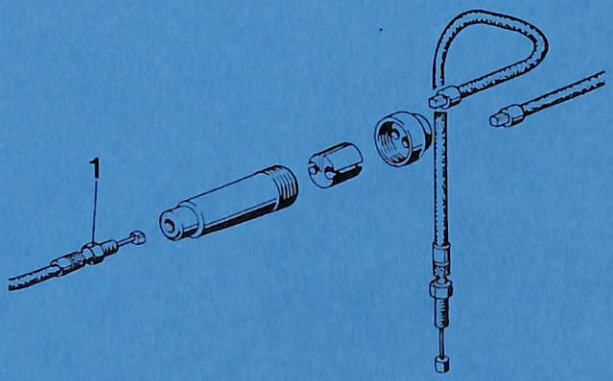

247 80 13 38

Turn sleeve of distributor (1) while holding on knurled section (2). Disconnect cables on distributor (arrow).

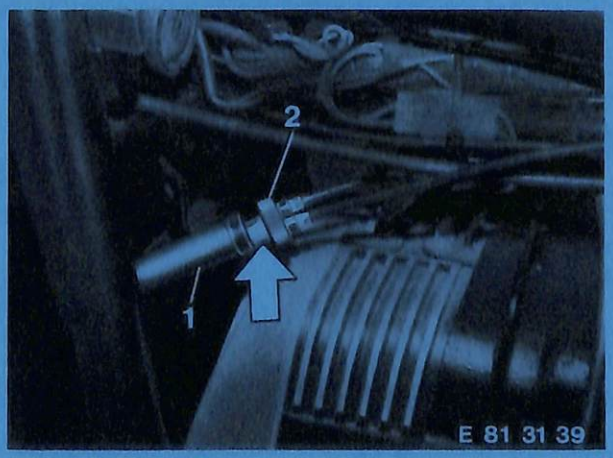

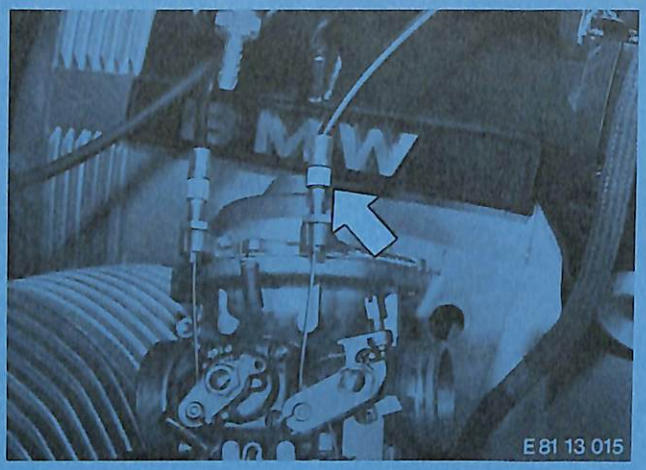

Unscrew lock nut of adjusting screw on carburetor and remove screw (arrow). Disconnect cable on throttle control.

Note:
Adjust engine idle speed and fuel/air mixture 13 00 004.

■

32 73 030 Removing and Installing Accelerator Cable

Push back water cap 1 and unscrew cover 2.

Detach accelerator cable.

Installation Note! Prior to assembling, lubricate control cam and spline on throttle twist grip with grease. When assembling, make sure that slot end „a" in throttle twist grip aligns with opening „b" in handlebar grip at driver's side end. Install lower cable in double nipple and insert together with chain and control cam in handlebar grip, that marks „c" and „d" on cam and handlebar grip align. Install upper accelerator cable in double nipple. Position cover and pull back upper accelerator cable sleeve at the same time, that accelerator cable end sleeve can engage in its seat in cover opening. Tighten cover and push on water cap. Only full conformance with these instructions will guarantee correct movement of accelerator cables.

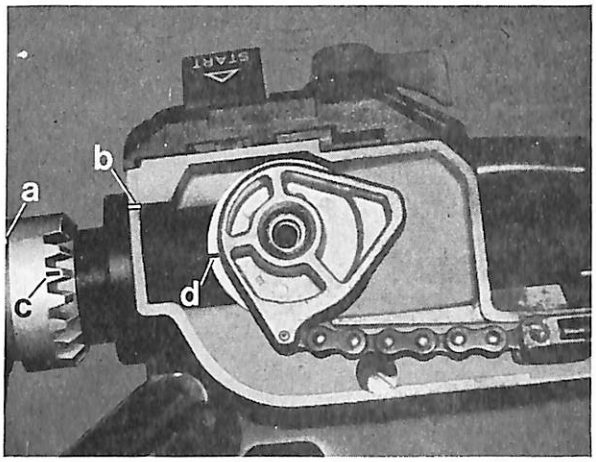

Remove and install fuel tank – 16 11 030.
Unscrew accelerator cable setscrew (arrow) and disconnect cable with nipple from throttle lever.

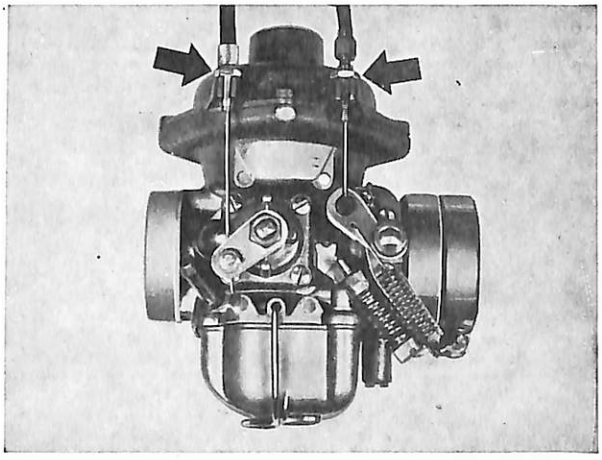

3

33 Rear Wheel Drive

Specifications		Page 33– 0/3
Specifications – 1981 models		33– 0/7
33 10 050	Rear wheel drive – remove and install	33–10/1
33 10 113	Rear wheel drive – disassemble and assemble	33–10/2
33 12 051	Drive pinion with ring gear – replace	33–12/1
33 17 350	Rear wheel swinging arm – remove and install	33–17/1
33 17 381	Taper roller bearing of rear wheel swinging arm – replace	33–17/2
33 52 120	Spring strut – remove and install	33–52/1
33 53 580	Coil spring – remove and install	33–17/3
	Rear wheel drive – troubleshoot	33–17/5

Rear Wheel Drive

Specifications

Model	R 65
Type of teeth	Klingelnberg Palloid spiral
Number of teeth	31 : 9
Ratio	1 : 3.44
Oil grade: Initial filling	Brand name breaking in hypoid gear lube SAE 90
After first oil change above 5° C (41° F) below 5° C (41° F)	Brand name hypoid gear lube SAE 90 Brand name hypoid gear lube SAE 80
Oil volume in ltr. (pints)	0.25 (0.53)
Backlash in mm (in.)	0.15 . . . 0.20 (0.006 . . . 0.008)
Lateral play of ring gear	no play (without gasket)
Rear Wheel Suspension	Control arm with 3-way adjustable spring struts and double-action hydr. absorbers
Spring travel in mm (in.)	110 (4.331)
Shock absorber test Test travel in mm (in.) Test speed in rpm Traction stage in kp (lbs) Pressure stage in kp (lbs)	 50 (1.968) 100 88±10 (194±22) 28±5 (62±11)

Rear Wheel Drive

Specifications

Model	R 65
Support Spring	
Installed length in mm (in.)	190.5 (7.500)
Relaxed length in mm (in.)	244±4 (9.606±0.157)
Spring outside dia. in mm (in.)	57.5 (2.264)
Spring inside dia. in mm (in.)	42.5 (1.673)
Wire gage dia. in mm (in.)	7.5 (0.295)
Control Arm	
Oil grade above 5° C (41° F)	Brand name hypoid gear lube SAE 90
below 5° C (41° F)	Brand name hypoid gear lube SAE 80
Oil volume in ltr. (pints)	0.15 (0.32)

Torque Values in Nm (ft lbs)

Nut on drive pinion	150^{+15} (108^{+11})	Final drive oil drain plug	23 . . . 26 (17 . . . 19)
Threaded ring in housing	100 . . . 120 (72 . . . 87)	Control arm oil filler plug	14 (10)
Final drive oil filler plug	28 . . . 31 (20 . . . 22)	Control arm oil drain plug	14 . . . 17 (10 . . . 12)
Bearing pin of control arm	10 . . . 12 (7 . . . 9)	Nuts for cardan cover	18 . . . 21 (13 . . . 15)
Shock absorber rod to upper spring strut eye	30 . . . 34 (22 . . . 24)	Counternut on contr. arm bearing pin	100 . . . 110 (72 . . . 79)
		Bolt for rear stub axle	14 . . . 18 (10 . . . 13)

Tighten all other bolts and nuts to common torque values as listed in tables from bolt/nut suppliers or the new BMW Standard 60002.0.

Rear Wheel Drive

Specifications 1981 Models

Model	R 65	R 65 LS
Type of teeth	Klingelnberg Palloid spiral	
Number of teeth	9 : 32	
Ratio	1 : 3.56	
Oil grade: Initial filling	Brand name breaking in hypoid gear lube SAE 90 API-Classification GL 5	
After first oil change above 5° C (41° F) below 5° C (41° F)	Brand name hypoid gear lube SAE 90 Brand name hypoid gear lube SAE 80	API-Classification
Oil volume in ltr. (pints)	0.35 (0.53)	
Backlash in mm (in.)	0.08 . . . 0.15 (0.0031 . . . 0.0059)	
Lateral play of ring gear in mm (in.)	0.1 (0.004)	
Rear Wheel Suspension	Control arm with 3-way adjustable spring struts and double-action hydr. absorbers	
Spring travel in mm (in.)	110 (4.331)	
Shock absorber test Test travel in mm (in.) Test speed in rpm Traction stage in kp (lbs) Pressure stage in kp (lbs)	 50 (1.968) 382 88±10 (194±22) 28±5 (62±11)	

Rear Wheel Drive

Specifications 1981 Models

Model	R 65	R 65 LS
Support Spring Installed length in mm (in.)	190.5 (7.500)	
Relaxed length in mm (in.)	244 ± 4 (9.606 ± 0.157)	
Spring outside dia. in mm (in.)	57.2 (2.264)	
Spring inside dia. in mm (in.)	42.5 (1.673)	
Wire gage dia. in mm (in.)	7.5 (0.295)	
Control Arm Oil grade above 5° C (41° F) below 5° C (41° F)	Brand name hypoid gear lube SAE 90 Brand name hypoid gear lube SAE 80	API Classification GL 5
Oil volume in ltr. (pints)	0.15 (0.32)	

Torque Values in Nm (ft lbs)

Oil drain plug in final drive housing	25.5 (18)
Oil filler plug in rear wheel swinging arm	finger tight
Oil drain plug in rear wheel swinging arm	15.7 (11)
Nuts on final drive case cover	17.7 (13)
Spring strut eye to piston rod	38 ± 2 (27 ± 1)
Twelve-sided nuts for final drive housing/ rear wheel swinging arm	47 (34)
Nut on drive pinion	165 (119)
Threaded ring in final drive case	118 (85)
Oil level inspection bolt in final drive case	10 (7)
Shaft bolt of rear wheel swinging arm	10 + 2 (7 + 1)
Lock nut for swinging arm shaft bolt	100 + 20 (72 + 14)
Spring strut mounting bolts	35 + 5 (25 + 4)

All other bolt and nuts are tightened to standard torque values as listed in tables published by suppliers of bolts and nuts or in the new BMW Standard 60002.0.

Final Drive

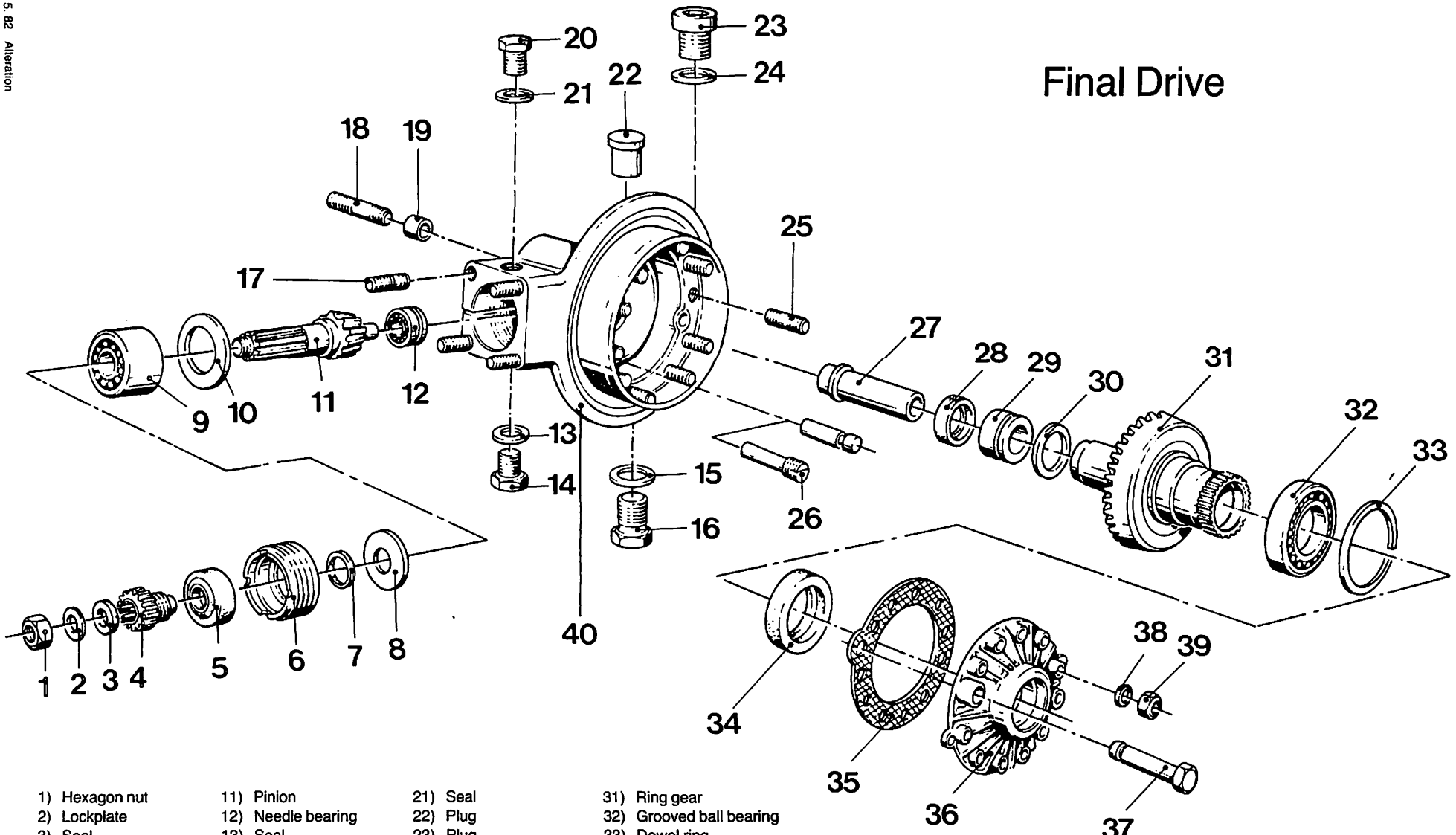

1) Hexagon nut
2) Lockplate
3) Seal
4) Clutch hub
5) Shaft seal
6) Threaded ring
7) Shim
8) Washer
9) Angular ball bearing
10) Shim
11) Pinion
12) Needle bearing
13) Seal
14) Plug
15) Seal
16) Plug
17) Stud
18) Stud
19) Bushing
20) Plug
21) Seal
22) Plug
23) Plug
24) Seal
25) Stud
26) Notched pin
27) Bushing
28) Shaft seal
29) Needle bearing
30) Thrust ring
31) Ring gear
32) Grooved ball bearing
33) Dowel ring
34) Shaft seal
35) Gasket
36) Housing cover
37) Bearing pin
38) Washer
39) Hexagon nut
40) Housing

33 10 050 Removing and Installing Rear Wheel Drive

Remove and install rear wheel 36 30 320.

Set motorcycle on its kickstand and place a support underneath the swinging arm mount that rear wheel can be turned freely.

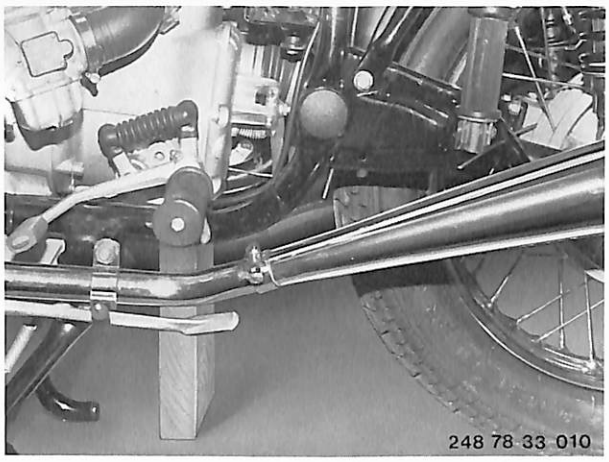

Unscrew right spring strut mounting bolt (arrow) and remove with washer.

Unscrew plug (2) and drain oil in right rear wheel swinging arm. Also unscrew filler plug (1) to discharge and speed up draining.

Installation:
Add oil after assembling. Refer to Specifications for oil volume and grade.

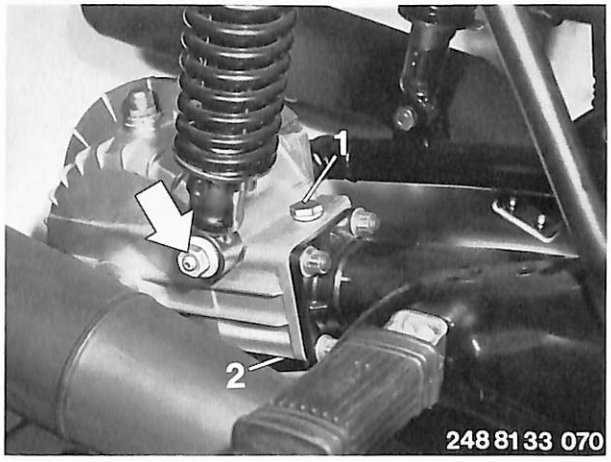

Unscrew hexagon or wing nut on brake linkage. Pull off brake rod (1) on brake lever (2). Take hollow pin (3) out of lever, place on brake rod and hold with wing nut or hexagon nut.

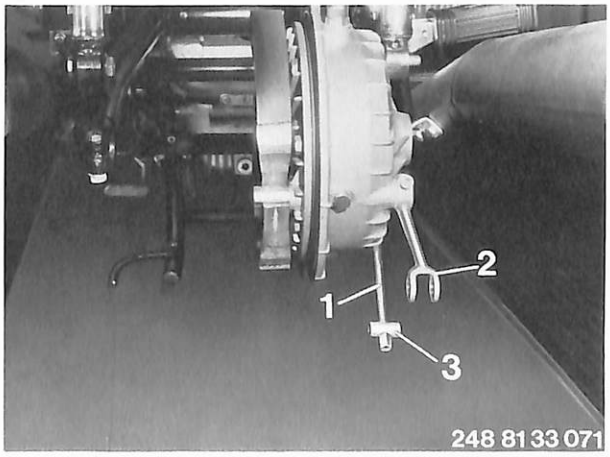

Loosen upper spring strut mounting bolt. Unscrew 4 nuts (arrows) with washers on mounting bolts of right swinging arm. Remove final drive.

When **assembling** only tighten these four nuts after shaft has been inserted through rear wheel drive and stub axle. See Specifications for tightening torque values.

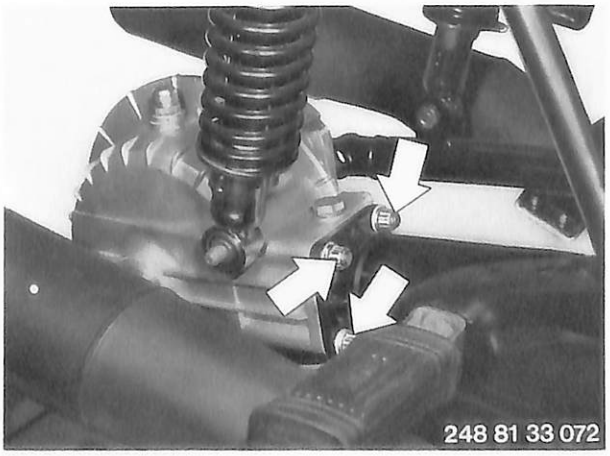

33 10 113 Disassembling and Assembling Rear Wheel Drive

Remove and install rear wheel drive 30 10 050.
Drain oil!
Remove and install brake shoes 34 21 150.
Unscrew bolt on brake lever, take off lever and pull brake key (arrow) out of rear wheel drive.

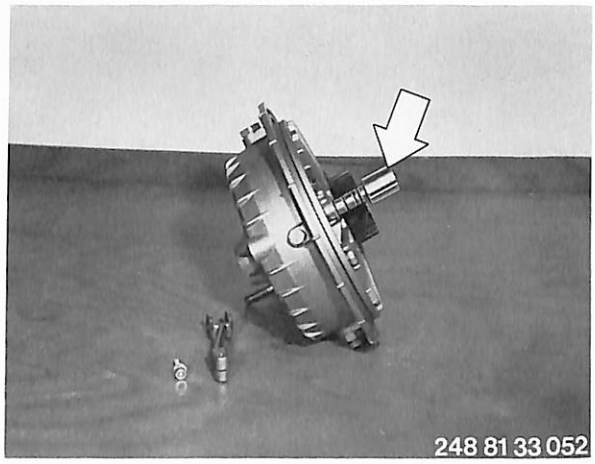
248 81 33 052

Place rear wheel drive in assembly stand, BMW No. 33 1 600.

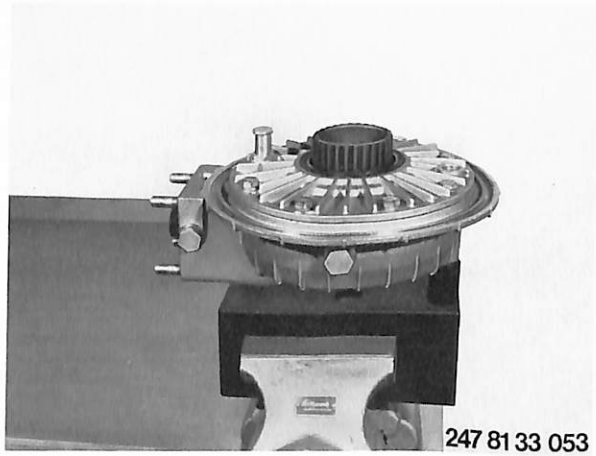
247 81 33 053

Unscrew hexagon head bolts on cover. Heat cover to approx. 80° C and press off with two M 5 × 30 screws (arrows). Remove oil baffle plate.

Installation:
Seal cover with Loctite No. 573 or a paper gasket. Insert assembly sleeve, BMW No. 33 1 000, through shaft seal into case cover, then place on drive spline of ring gear and press cover on to case. Heat case cover to about 80° C.

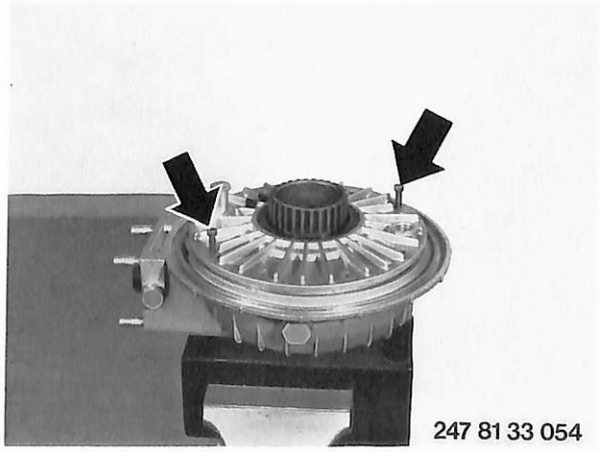
247 81 33 054

Drive shaft seal out of cover with a mandrel. Drive in new shaft seal with impact mandrel, BMW No. 33 1 850, and handle, BMW No. 00 5 500.

Note:
Place cover on smooth side of guide.

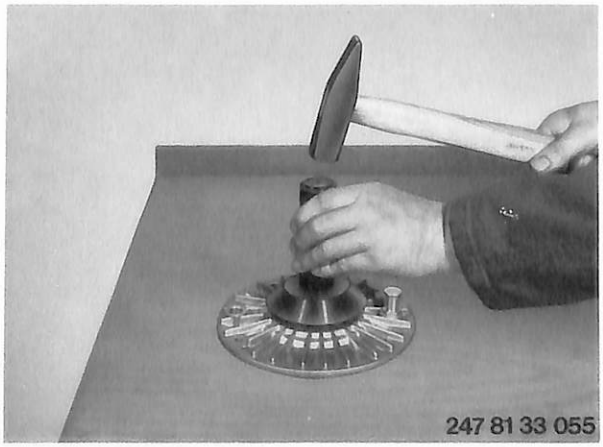
247 81 33 055

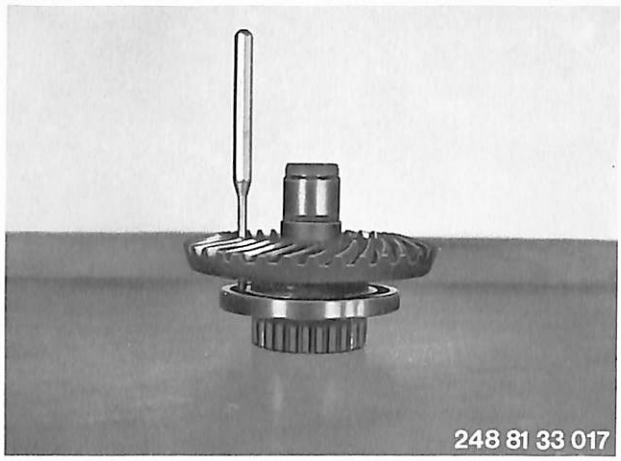

Knock off grooved ball bearing of ring gear uniformly with a soft metal mandrel and hammer applied through holes provided for this purpose in the ring gear.

■

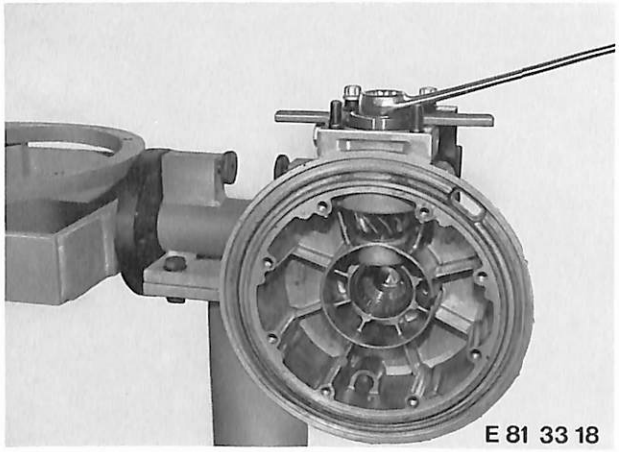

Place assembly stand upright. Unscrew nut on drive pinion and pull off washer with plastic ring and pinion.

Installation:
Nut is locked with Loctite No. 274.
See Specifications for tightening torque.

■

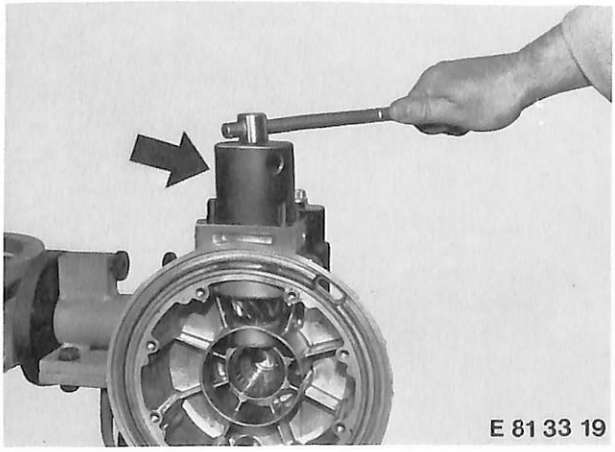

Unscrew threaded ring (arrow) together with shaft seal with special wrench, BMW No. 33 1 700.
Also remove spacer and washer.
See Specifications for tightening torque.

■

Knock shaft seal out of threaded ring with a mandrel. Drive in new shaft seal with impact mandrel, BMW No. 33 1 750, and handle, BMW No. 00 5 500.

■

Heat case to about 120° C (check temperature with a thermocolor pencil) and remove drive pinion gear (arrow) with angular ball bearing and shim.

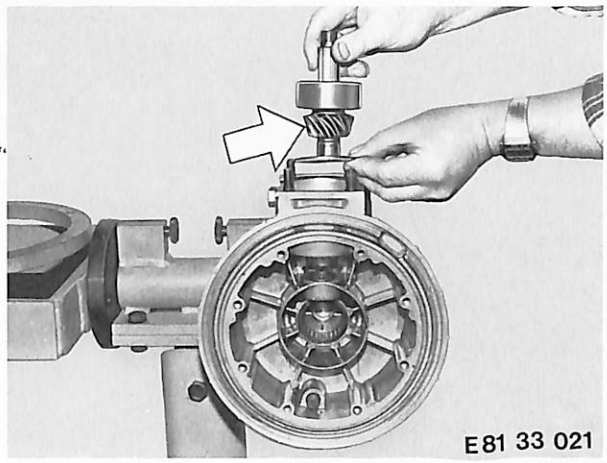

Pull off angular ball bearing on drive pinion gear with a Kukko 17 K puller, BMW No. 00 7 500.

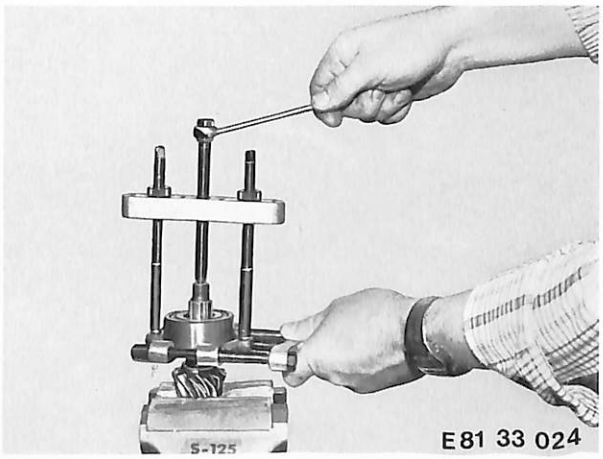

Replace pinion needle bearing in propeller shaft housing. Unscrew and remove bolt (arrow) up to and including 1979 models.

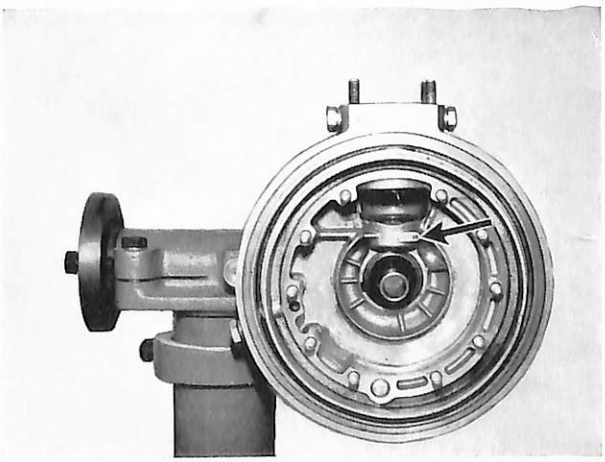

Heat case to about 120°C. Pull out needle bearing (from drive pinion gear) with an internal claw ball bearing puller, No. 400 151/T2.

Installation:
Heat case to about 120° C and drive in pinion needle bearing with a suitable mandrel.

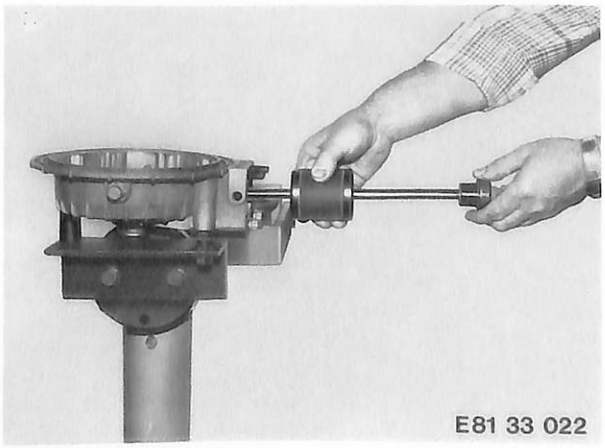

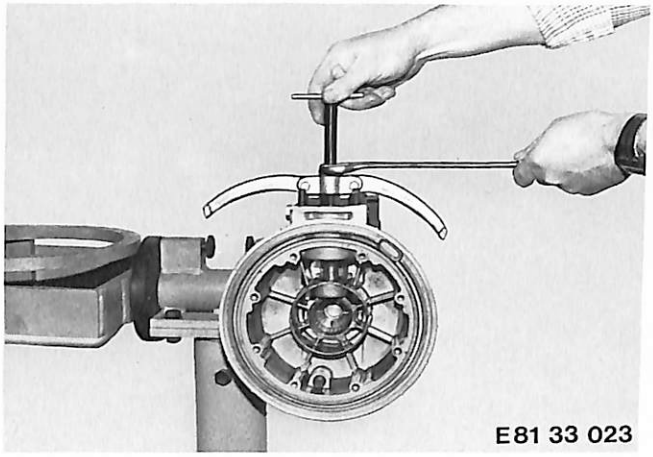

Or with Kukko internal claw puller No. 21/3 and support 22-1. Be careful not to demage sealing surfaces!

■

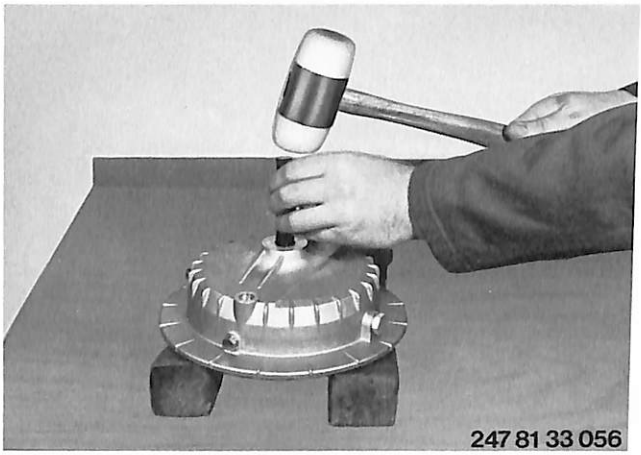

Heat case to about 100° C to replace the ring gear needle bearing, place cover end on two pieces of wood and knock out bushing for stub axle with a 17.8 mm dia. mandrel.

■

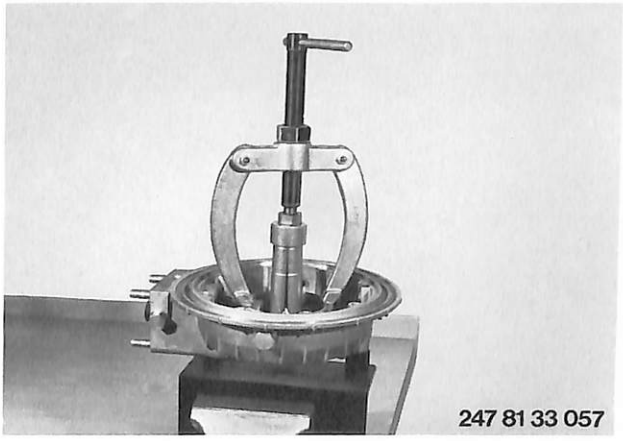

Pull out needle bearing with Kukko puller, BMW No. 00 8 560, while clamping bearing on bottom edge.

Installation:

Only install needle bearing and bushing for stub axle in a case heated to about 100° C.

■

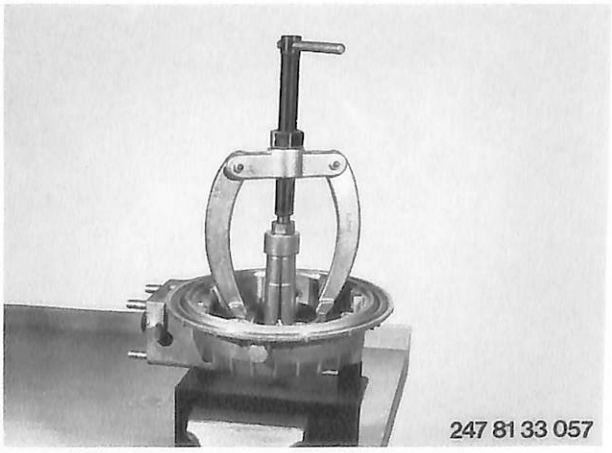

Pull out radial oil seal with Kukko puller, BMW No. 00 8 551, and support bridge from BMW No. 00 8 560.

■

Drive in radial oil seal, open end of seal facing up, with impact mandrel, BMW No. 33 1 880, used in conjunction with handle, BMW No. 00 5 500.

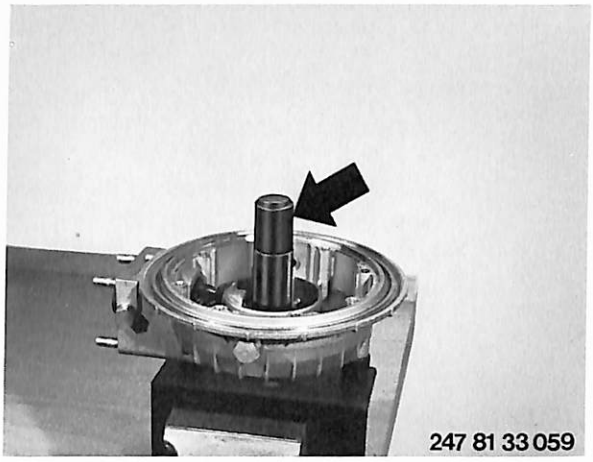

Pull off needle bearing inner race with a standard Kukko puller, BMW No. 00 7 500. Spindle support 30 mm dia (arrow).
Heat inner race to about 120° C for installation.

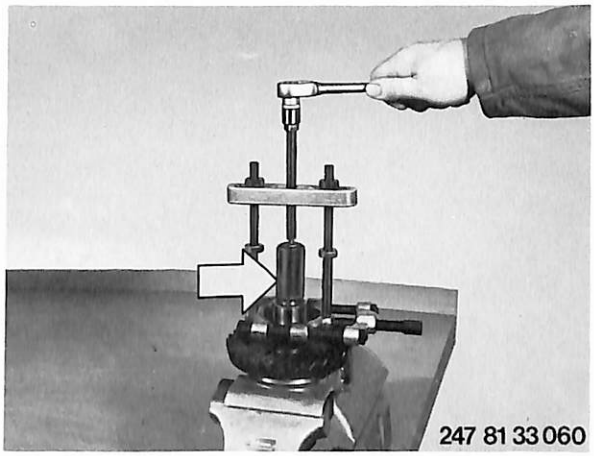

33 12 051 Removing and Installing Drive Pinion and Ring Gear

Disassemble and assemble rear wheel drive 33 10 113. Pinion and ring gear always belong together.
Check pair code (arrow).
The pair code supplies information on the matching of pinion and ring gear. Both parts are given tolerances during test stand inspection, to provide smooth running and correct backlash when installed.

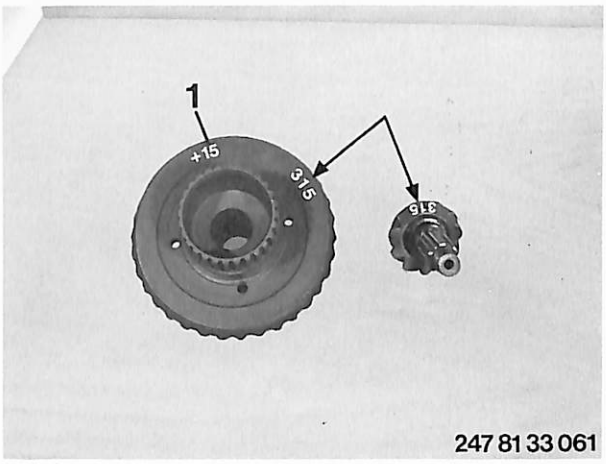

247 81 33 061

■

The basic case size is 75.50 ± 0.05 mm, as measured from angular ball bearing shoulder on pinion to center of ring gear axis. The basic size is not stamped in the case. If the case has a different size, the two digits after the point are stamped on the inside (arrow).

The basic size of the pinion is 77.50 mm. A deviation from this size is provided on the ring gear with pertinent + or – sign (1) (see figure above).

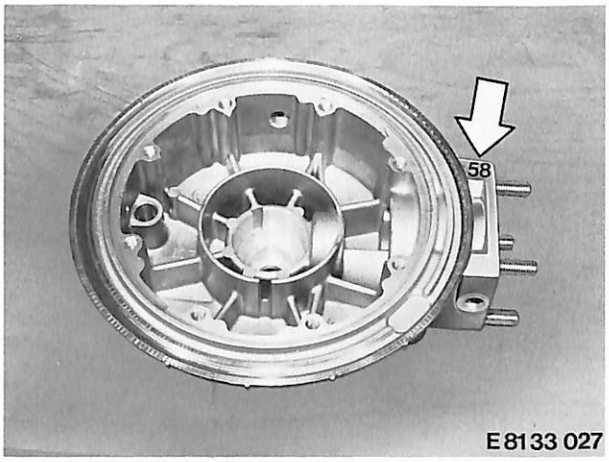

E 81 33 027

■

The case size must be subtracted from the basic pinion size (plus or minus the deviation specified on the ring gear). The difference is the thickness of the shim (arrow) required between the angular ball bearing shoulder and seat in the case. If there is no deviation on the ring gear and no size stamping on the case, this means that the case and pinion both have basic size. In this case the thickness of the shim would be: 77.50–75.50 mm = 2 mm.
If deviation is specified on the ring gear, e. g. + 15, the shim thickness would be: 2.0 + 0.15 mm = 2.15 mm.

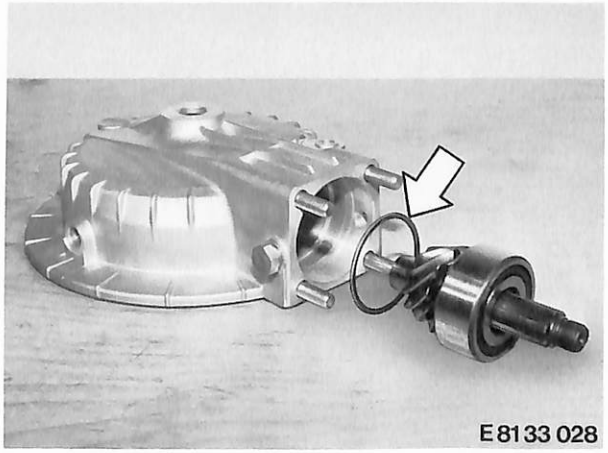
E 81 33 028

■

Place an appropriately thick bronze ring (arrow) in the case to reach the backlash provisionally.

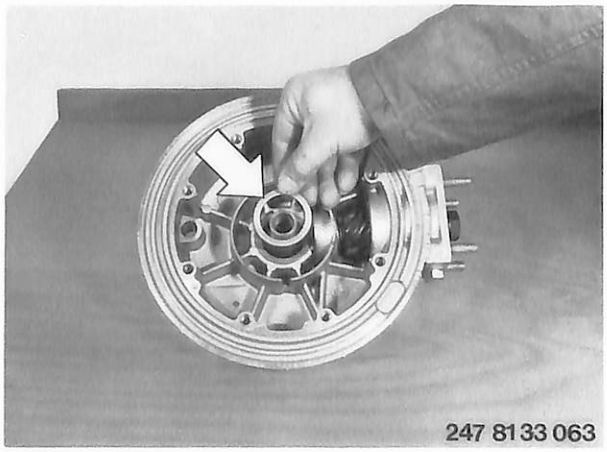
247 81 33 063

■

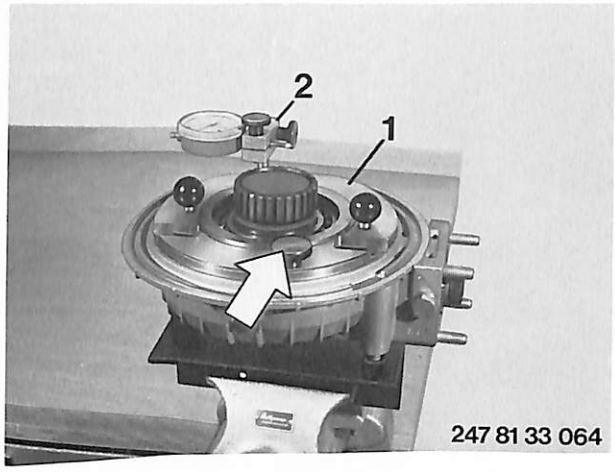

Use master gauge, BMW No. 33 2 610, to adjust the backlash. Place gauge ring (1) with dial gauge holder (2) on final drive case with installed ring gear and mount on case with the knurled head bolt (arrow) to prevent turning.

■

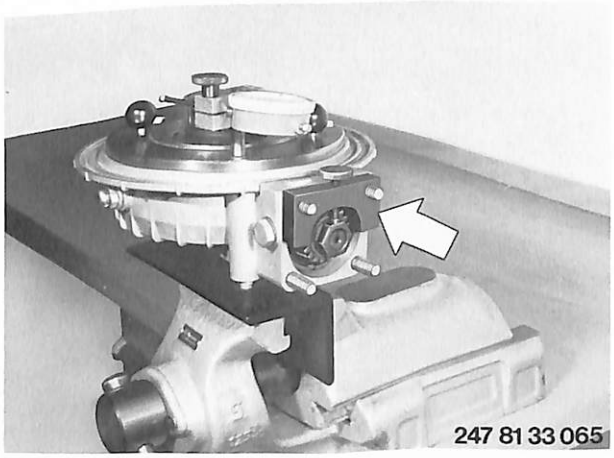

To be able to measure the backlash correctly, the pinion must be held with the arrest (arrow), BMW No. 33 2 620.

Note:
Only use gauge ring (1) beginning with 1981 models. The other parts of the master gauge can be used for all models.

■

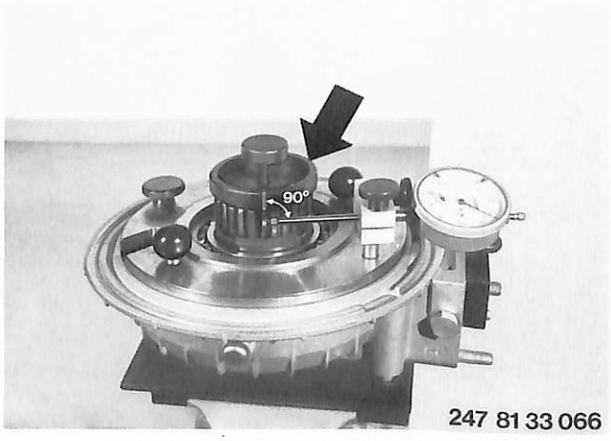

Clamp gauge stop (arrow) in ring gear in such a manner that dial gauge sensor rests on mark of gauge stop at a right angle. Turn ring gear back and forth slightly on gauge stop. Check backlash at three points (offset 120°) .

See Specifications for backlash value.

■

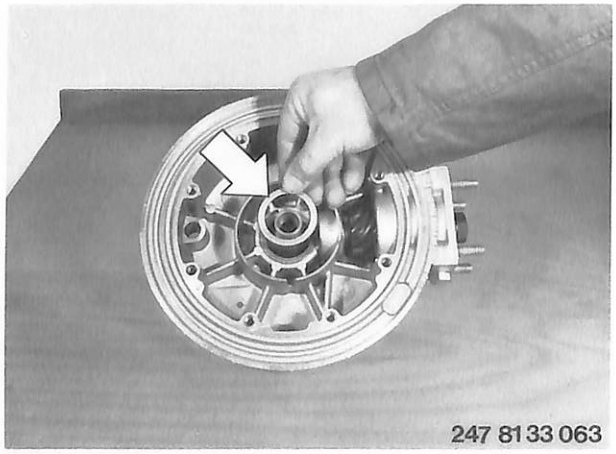

If backlash is too small or too large, a thicker or thinner bronze ring (arrow) must be installed.

■

To check the tooth contact pattern, coat one pair of pinion teeth with "paris blue" or a light colored paint. Place ring gear in case and turn back and forth several times under firm pressure.
If this tooth contact pattern is produced, the pinion must be taken out of the case further, i. e. a thicker spacer must be installed.

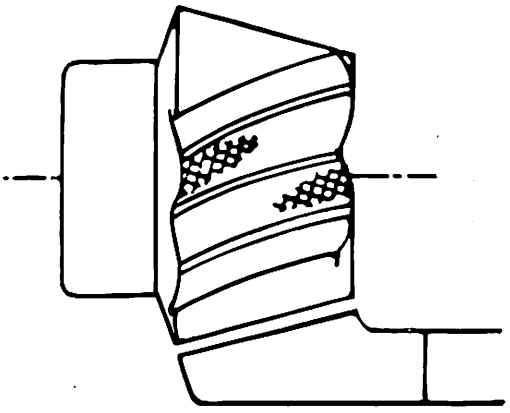

E 81 33 034

This will then be tooth contact pattern.

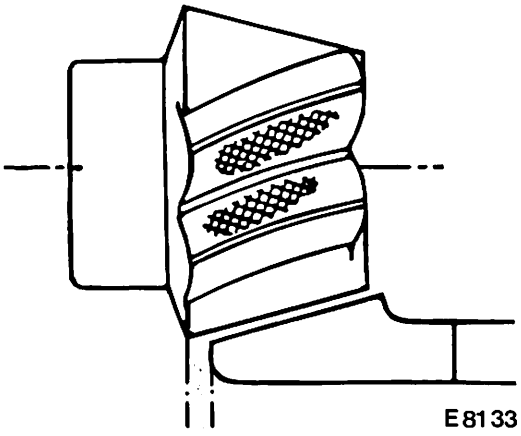

E 81 33 035

If this tooth contact pattern is produced, the pinion must be moved further toward the case center point, i. e. a thinner spacer must be installed.

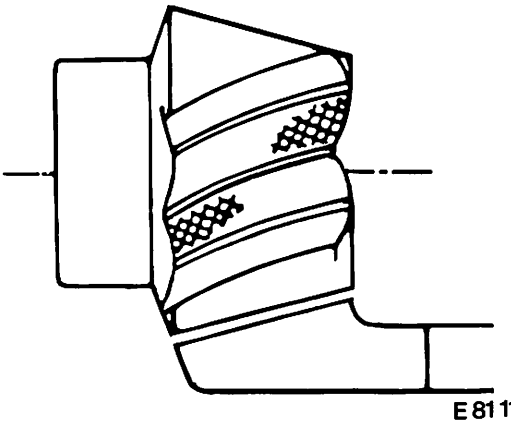

E 81 11 036

This will then be the tooth contact pattern.

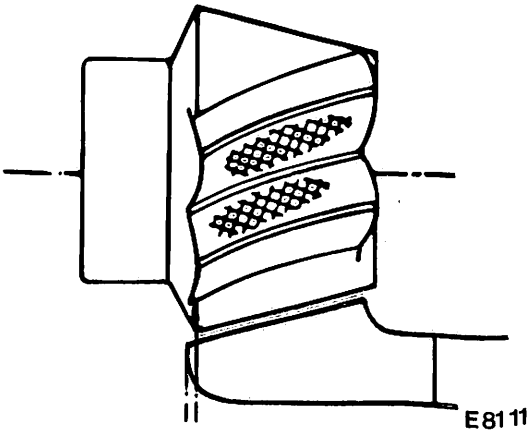

E 81 11 037

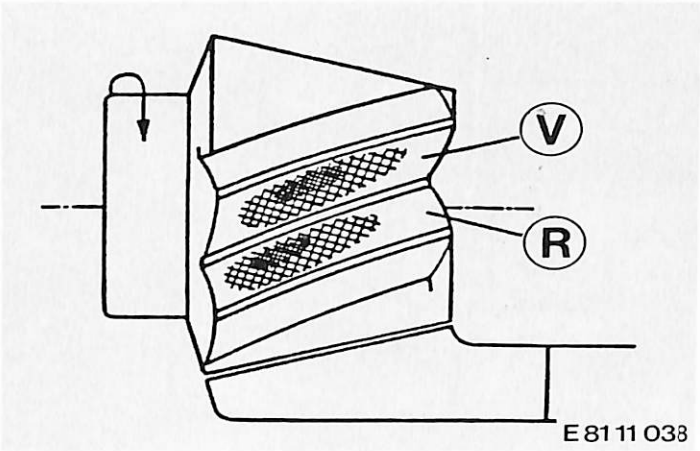

Correct tooth contact pattern in unloaded state:
Tooth contact pattern at center on forward flank "V". Tooth contact pattern closer to outside diameter on reverse flank "R".

Never have tooth contact on small diameter!

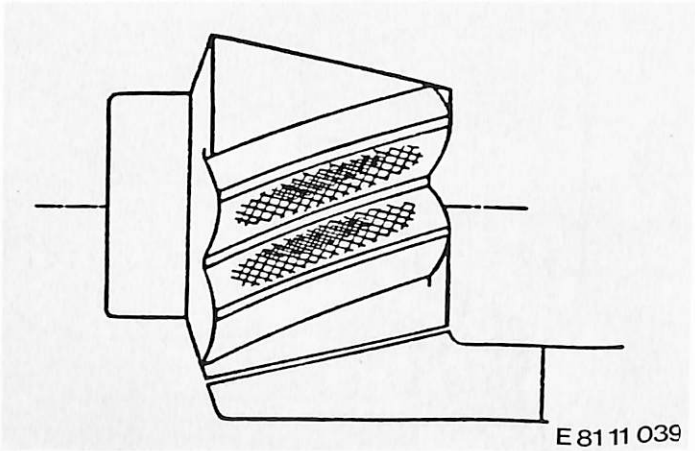

Tooth contact pattern with load looks like this.

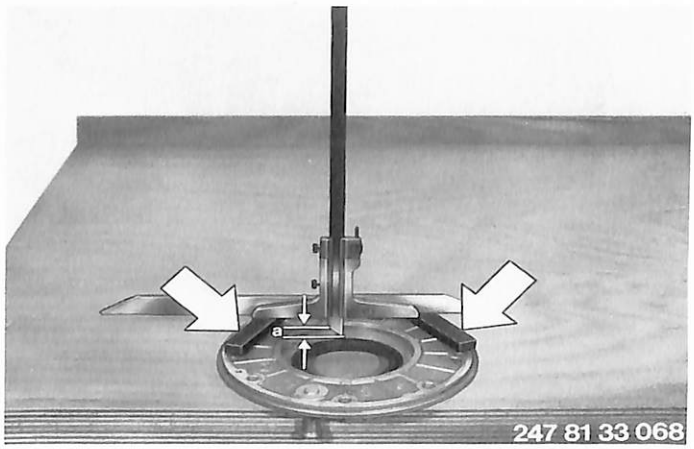

Leave gauge ring of master gauge on final drive case to adjust the ring gear lateral play (1981 models). Measure distance "a" from ball bearing seat base to cover mating surface with a depth gauge, BMW No. 00 2 550, and the necessary measuring adapters (arrows).

Measured distance	20.0 mm
Thickness of adapters	–9.8 mm
Distance "a"	10.2 mm

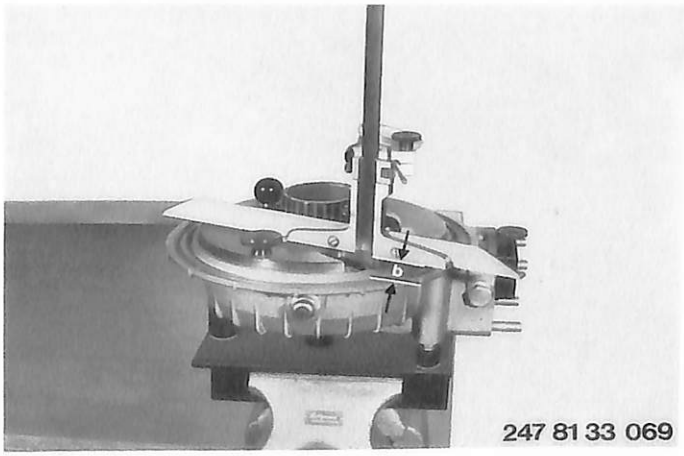

Measure distance "b" with depth gauge, BMW No. 00 2 550.

1. Measure from gauge ring through opening to case mating surface = distance I.
2. Measure from gauge ring to ball bearing outer race = distance II.

Distance I – distance II = distance "b".

Adjust lateral play of ring gear (1978 models).
Measure distance (a) from grooved ball bearing seat base to cover mating surfaces with a depth gauge and any necessary measuring adapters.

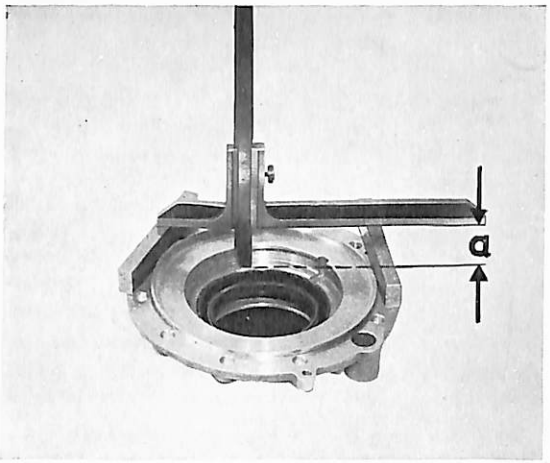

Measure distance (b) on mating surface of propeller shaft housing without gasket from grooved ball bearing on ring gear to mating surface.
Take up all play by installing appropriately thick shims between the grooved ball bearing and seat in the cover. The necessary shim thickness will be the difference of distance (a) minus distance (b) –0.1 mm.
Installing the gasket will provide the necessary play, so that the ring gear is not under pressure.

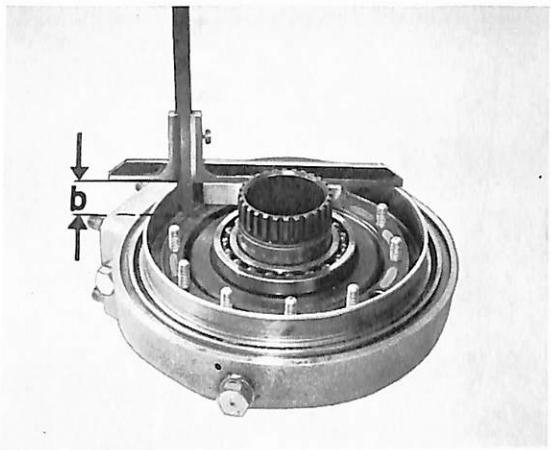

33 17 350 Removing and Installing Rear Wheel Control Arm

Remove and install rear wheel – 36 30 320.

Remove and install rear wheel drive – 33 10 050.

Detach lower spring strut holder on left side.

Detach rubber cover between transmission and control arm on transmission end and push back as far as possible. Unscrew 4 connecting screws on universal joint with a ring wrench and lay aside with washers. When assembling, tighten screws with special ring wrench, BMW No. 00 2 560, and a torque wrench (see Specifications for torque values).

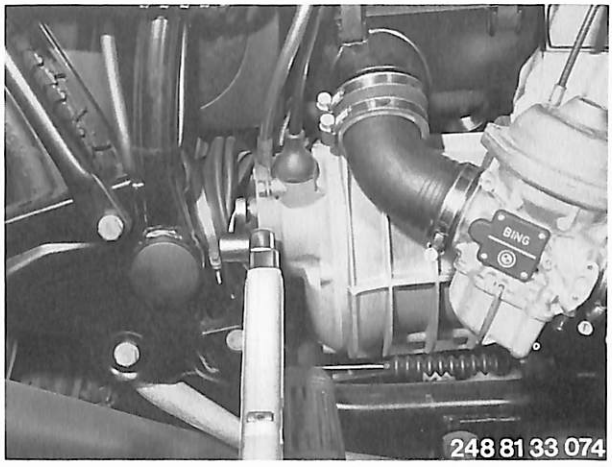

Remove left and right control arm mounts.
Remove caps and loosen lock nuts. Unscrew control arm bearing journals.

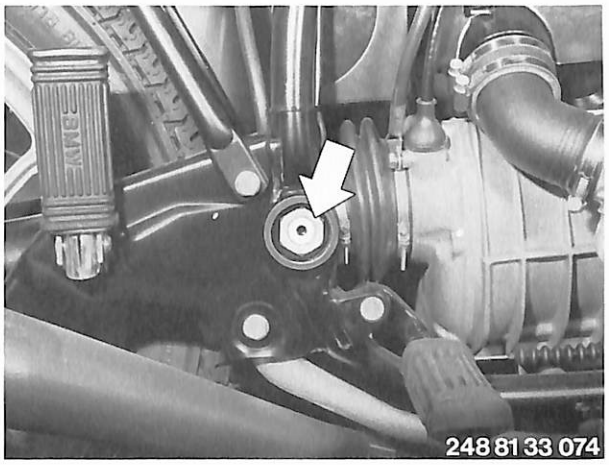

Installation:

Screw in bearing pin that there is equal distance (a) between control arm hub and frame on left and right sides. The propeller shaft should be at center in the control arm tube so that it can't knock when suspension is bottomed or rebounded fully. If necessary, distances (a) could be adjusted to differ slightly.
In order to attain the necessary bearing preload, tighten both bearing pins to 20 Nm, then loosen once again and finally tighten to 12 Nm. Lock bearing pin with a nut.
See Technical Data for tightening torque.
Push in caps.

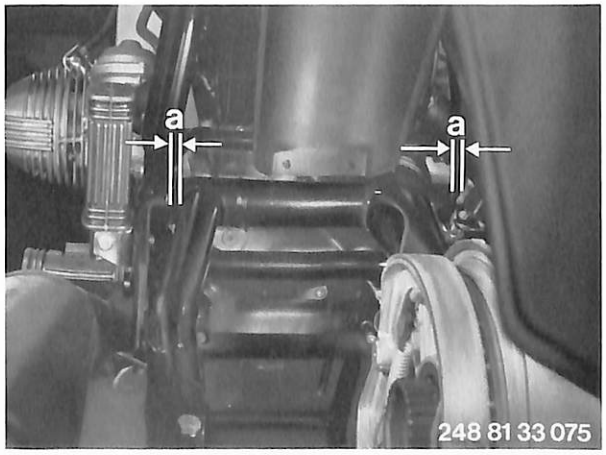

Detach brake pedal, counterholding the bearing pin and unscrewing the stop nut for this purpose.

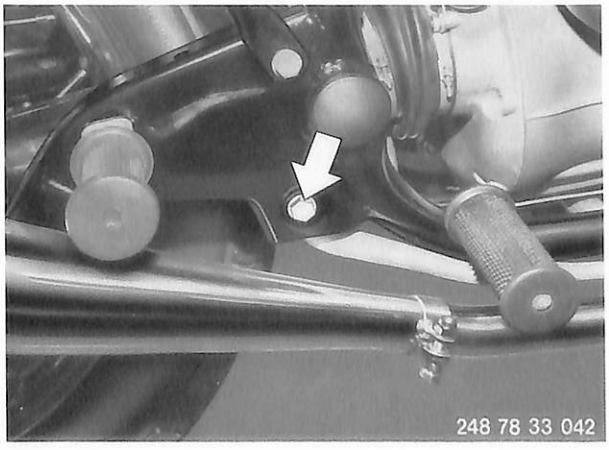

Disconnect lockpin on brake pull rod.

■

33 17 381 Replacing Tapered Roller Bearing of Rear Wheel Control Arm

Remove and install rear wheel control arm 33 17 350.

Remove and install propeller shaft 26 11 000.

1 Thrust ring
2 Cap
3 Tapered roller bearing
4 Bearing shell
5 End cap

Tapered roller bearings are not split beginning with 1981 models!

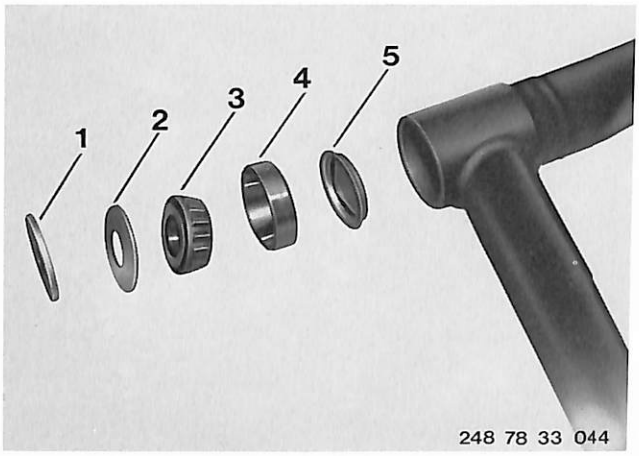

■

Take thrust ring, cap and tapered roller bearing together out of control arm.

Pull out outer bearing race with a Kukko internal claw puller, BMW No. 00 8 551.

Drive in bearing shell impact mandrel, BMW No. 00 5 550.

Installation:

Clean and lubricate tapered roller bearing thorughly when assembling.

Note for 1981 models:

Pull out control arm mount with Kukko internal claw puller no. 21/3 and support 22-1.

Drive in new mount with a 40 × 30 mm pipe which is 50 mm long.

■

33 52 100 Removing and Installing Spring Strut

Unscrew hexagon nuts (arrows) with washers and remove upper bolt. Also push down on motorcycle before removing the bolt of the left shock absorber.
See Specifications for tightening torque.

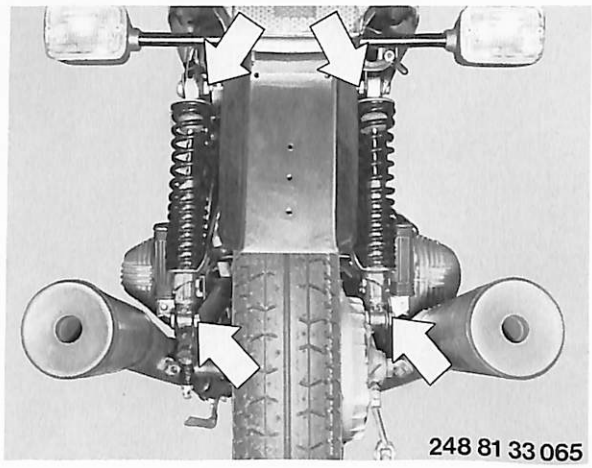

33 52 021 Removing and Installing Shock Absorber

Remove and install spring strut 33 52 100.
Clamp special tool, BMW 33 5 600, in a vise. Mount lower spring strut eye in the special tool (arrow).

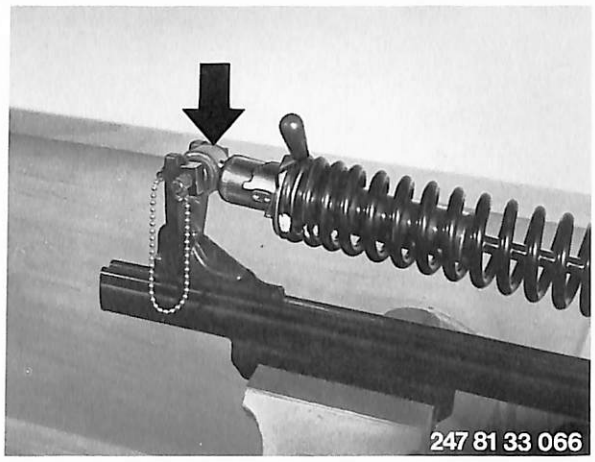

Install clamp, BMW No. 33 5 605, (arrow) between the 3rd and 4th spring coil windings.

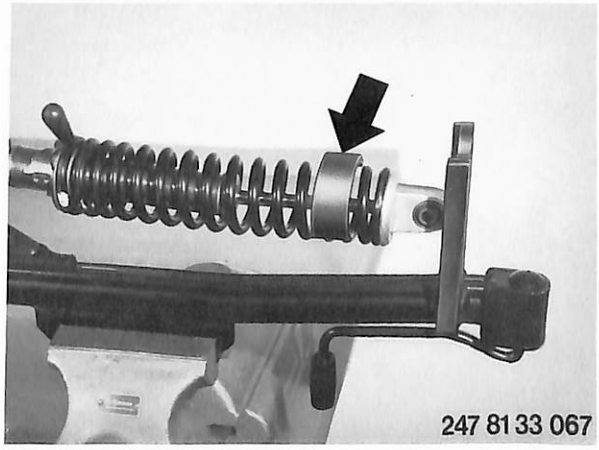

Slide thrust pad, BMW No. 33 5 610, on spring strut against clamp. The collar (arrow) must be on side of clamping claw (1).

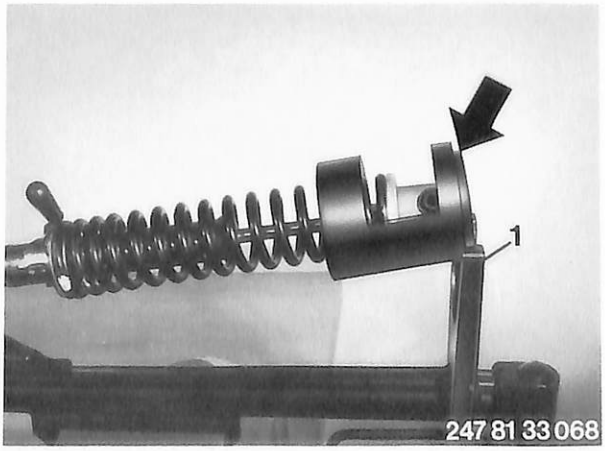

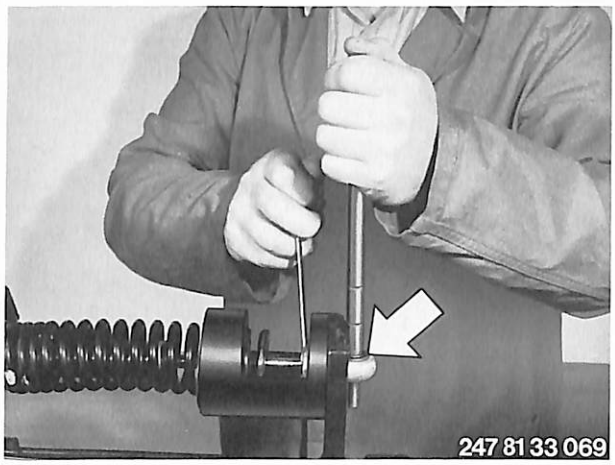

Move pressure element against clamping claw and preload spring strut enough, that an open-end wrench can be aplied on the wrench surface of the shock absorber piston rod. First push back the rubber pad. Disconnect spring strut eye on piston rod (arrow) with a suitable mandrel. Release spring strut.
Remove spring struts with absorber spring retainer in the same manner.
See Specifications for tightening torque.

■

34 Brakes

Specifications		Page 34– 0/3
Specifications – 1981 models		34– 0/5
34 00 046	Front wheel brake – bleed	34–00/1
34 11 000	Front brake pads – remove and install	34–11/1
34 21 200	Rear brake pads – remove and install	34–21/1
34 31 000	Brake master cylinder – remove and install	34–31/1
	Brakes – troubleshoot	34–31/4

Specifications

Model	R 65
Front Wheel	Disc brake
Brake disc dia. in mm (in.)	260 (10.236)
Min. brake disc thickness in mm (in.)	4.6 (0.181)
Effective brake pad area per disc in cm^2 (in^2)	42 (6.5)
Min. brake pad thickness in mm (in.)	1.5 (0.060)
Max. runout of brake surface to wheel hub in mm (in.)	0.03 (0.0012)
Master cyl. piston dia. in mm (in.)	13 (0.512) or 16 (0.630)
Wheel brake cyl. piston dia. in mm (in.)	36 (1.417)
Brake disc lateral runout in mm (in.)	0.1 (0.004)
Rear Wheel	Simplex solid hub brake
Brake drum dia. in mm (in.) Max. brake drum wear dia. in mm (in.)	200 (7.874) 201.5 (7.933)
Liner width in mm (in.)	30 (1.181)
Effective brake liner area in cm^2 (in^2)	107 (16.6)
Min. brake liner thickness in mm (in.)	1.5 (0.059)

Brakes

Specifications

Model	R 65
Brake fluid for disc brake	DOT 4 : ATE Brake Fluid "SL"

Torque Values in Nm (ft lbs)

Brake line to brake master cylinder	8^{+3} (6^{+2})
Brake line to brake caliper	8^{+3} (6^{+2})

Specifications 1981 Models

Model	R 65	R 65 LS
Front Wheel	Disc brake	Double disc brake
Brake disc dia. in mm (in.)	260 (10.236)	
Min. brake disc thickness in mm (in.)	4.6 (0.181)	
Effective brake pad area per disc in cm^2 (in^2)	42 (6.5)	
Min. brake pad thickness in mm (in.)	1.5 (0.060)	
Max. runout of brake surface to wheel hub in mm (in.)	0.03 (0.0012)	
Master cyl. piston dia. in mm (in.)	12 or 13 (0.472 or 0.512)	15 or 16 (0.591 or 0.630)
Wheel brake cyl. piston dia. in mm (in.)	36 (1.417)	
Brake disc lateral runout in mm (in.)	0.1 (0.004)	
Rear Wheel	Simplex solid hub brake	
Brake drum dia. in mm (in.) Max. brake drum wear dia. in mm (in.)	200 (7.874) 201.5 (7.933)	220 (8.661) 221.5 (8.720)
Liner width in mm (in.)	30 (1.181)	
Effective brake liner area in cm^2 (in^2)	107 (16.6)	89 (13.8)
Min. brake liner thickness in mm (in.)	1.5 (0.059)	

Specifications 1981 Models

Model	R 65	R 65 LS
Brake fluid for disc brake	DOT 4 : ATE Brake Fluid "SL"	

Torque Values in Nm (ft lbs)

Brake lines to brake hose	12 + 3 (9 + 2)
Brake line to brake master cylinder	8 + 2 (6 + 1)
Brake line to brake caliper	8 + 2 (6 + 1)

Throttle Twist Grip and Brake Master Cylinder

Brake Master Cylinder

10) Piston
11) Circlip
12) Dust cover
13) Washer
14) Cover
15) Phillips screw
16) Lockwasher
17) Fillister head screw
18) Plug
19) Seal
20) Plug

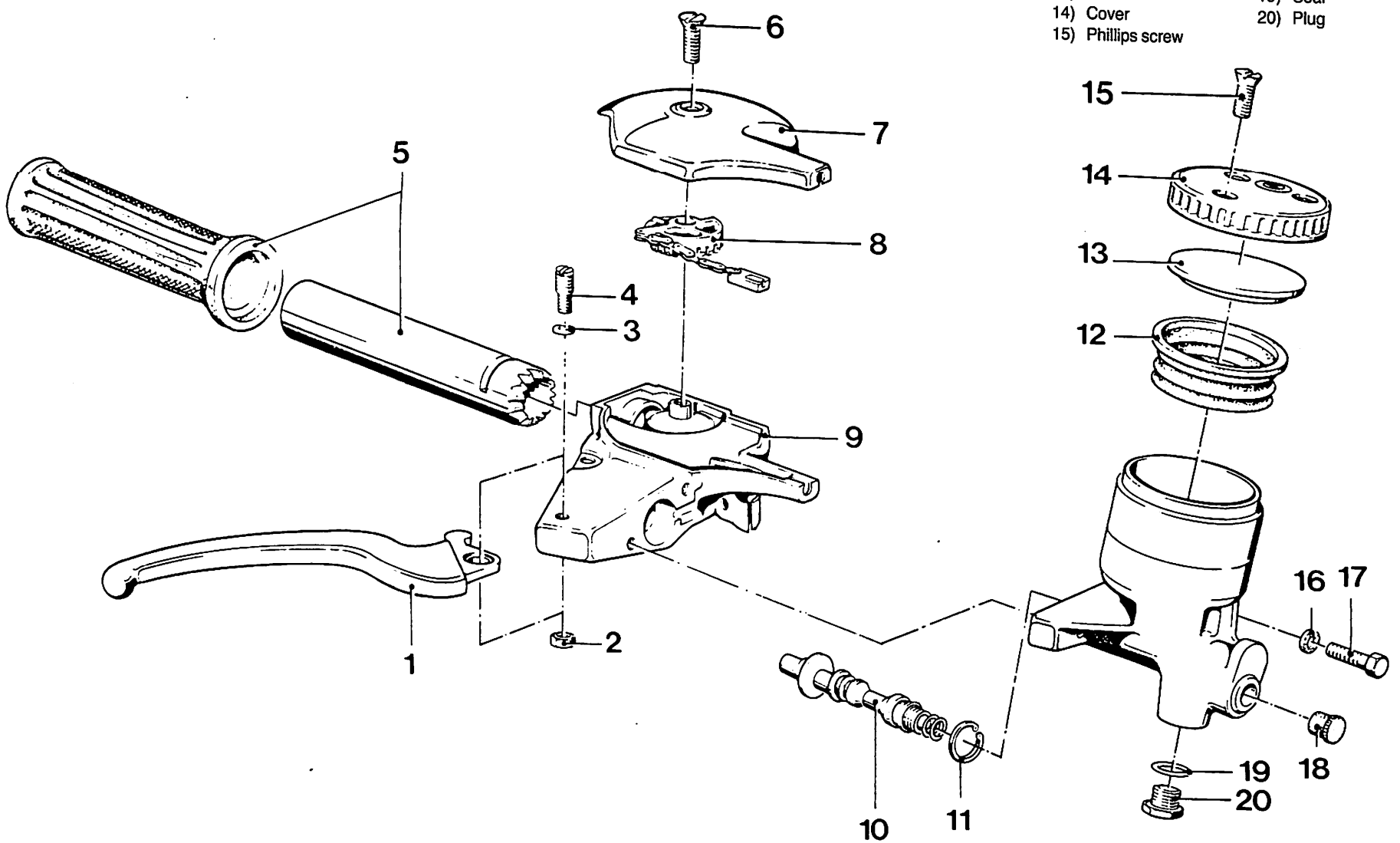

34 00 046 Bleeding Front Wheel Brake

Brake fluid must be replaced annually.

Brake fluid is hygroscopic and consequently will take in moisture from the atmosphere through vent hole in brake fluid tank. This could reduce the boiling point of brake fluid from 240° C (465° F) to 160 . . . 180° C (320 . . . 355° F).

Important! Be careful not to spill brake fluid on body paint, which would be damaged.
To add brake fluid, loosen screws in tank cap, remove diaphragm and add brake fluid to raise level to „max." mark. Close tank again.

Apply hand brake lever several times until brake pressure can be felt.

Hold lever under pressure and open bleeder screw while pulling lever firmly at the same time. Don't release lever before tightening the bleeder screw.

Repeat this procedure until brake fluid leaves without air bubbles. Tighten bleeder screw.

Important! Never drain brake fluid tank by pumping, since this would cause air to be taken into brake system.

Bleed on each brake caliper for motorcycles with double disc brakes.

34 11 000 Removing and Installing Front Brake Pads

Pry off plastic cap on brake caliper with a screwdriver. Drive out lockpins (1 and 2) from inside to outside with a punch. Remove cross spring and brake pads.

To avoid scoring on brake disc, brake pads must be replaced in good time (minimum pad thickness is given in mm in the picture).

Installation:
Push back piston of brake cylinder before installing new brake pads.

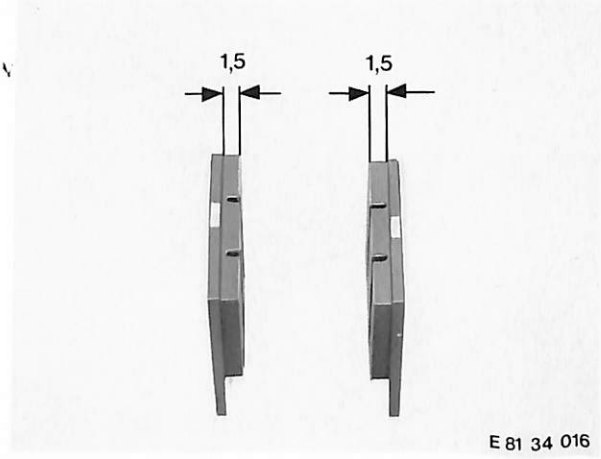

34 21 150 Removing and Installing Brake Shoes of Rear Wheel Brake

Remove rear wheel – 36 30 320.

Fold off one brake shoe from rear wheel drive with a screwdriver, and then disconnect spring.

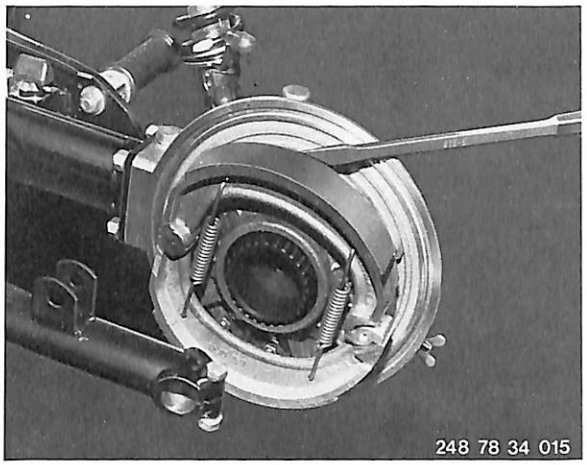

Installation Note! Connect brake shoes with springs and press both shoes on to brake anchor and brake key simultaneously.

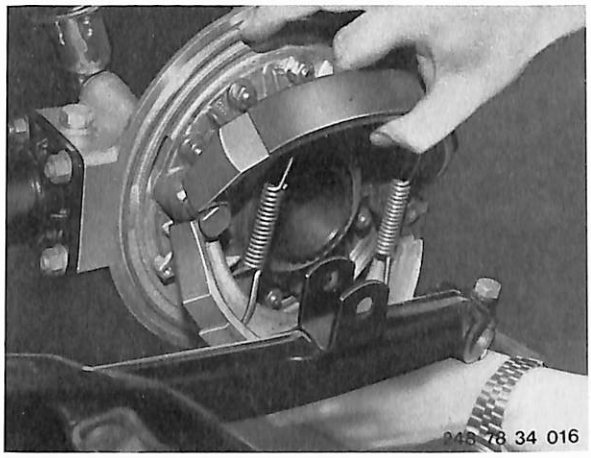

34 31 000 Removing and Installing Brake Master Cylinder

Detach instrument trim, unscrewing two phillips screws and round nut on ignition lock with circlip pliers for this purpose.
Pull out holders of turn signal indicator lamps from instrument trim and lift off trim.

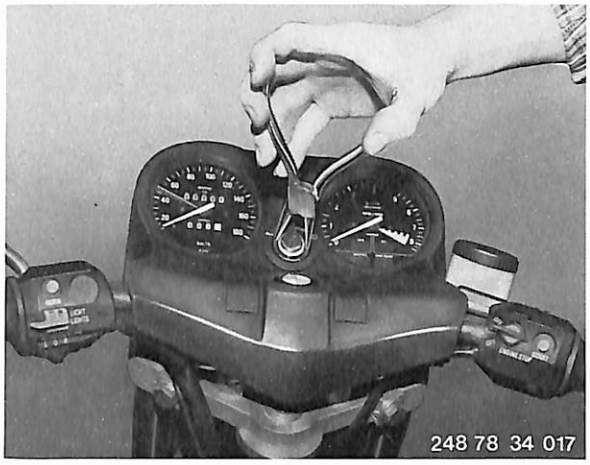

Loosen brake hose at brake fluid tank slightly.
Unscrew two socket head screws (1 and 2) holding brake cylinder on handlebar instrument and pull out brake cylinder.

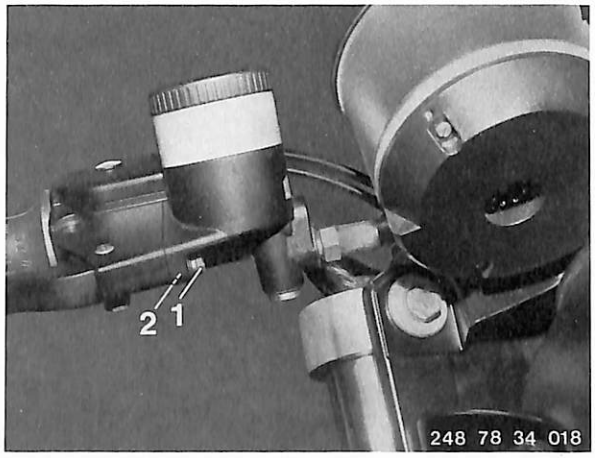

Unscrew brake cylinder from brake hose, counterholding hose with an open-end wrench.

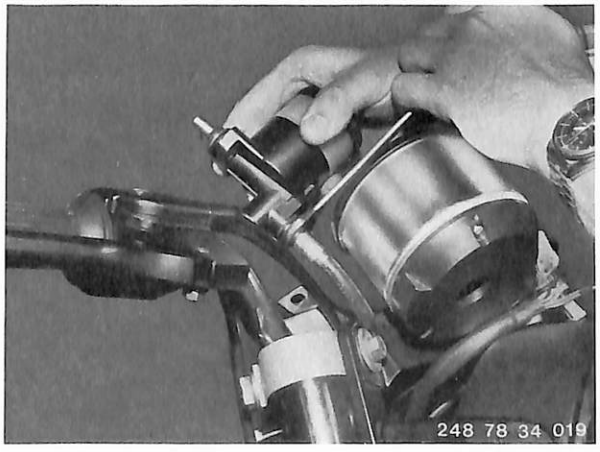

Trouble-shooting – brakes

Fault	Cause	Remedy
Judder at brake lever	Excessive lateral runout at brake disc	Renew brake disc
Poor braking action	Brake pads/linings worn Air in brake circuit Eccentric adjustment incorrect	Renew Bleed Check and adjust if necessary
Effort required at brake lever is too high	No clearance at handbrake lever or master cylinder	Reset

35 Pedals

35 21 000 Brake pedal, removing and installing . . . . . Page 35–21/1

35 21 000 Removing and Installing Brake Pedal

Disconnect lockpin from brake push rod.

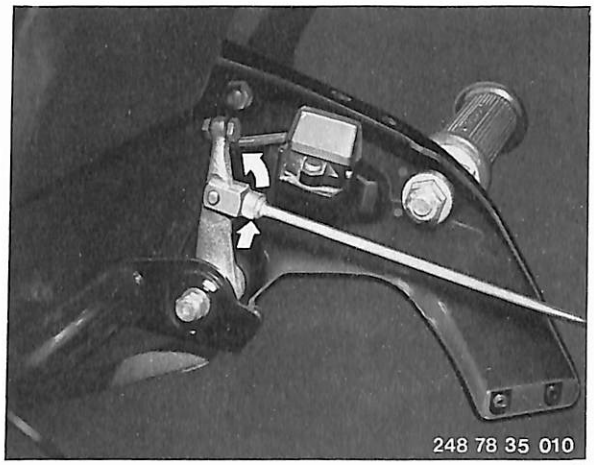

Unscrew stop nut, counterholding bearing pin (arrow).
Remove brake pedal.

Adjusting Brake:
Adjust winged nut on end of push rod until brakes start to stop rear wheel, then turn back winged nut by 2 to 3 turns.

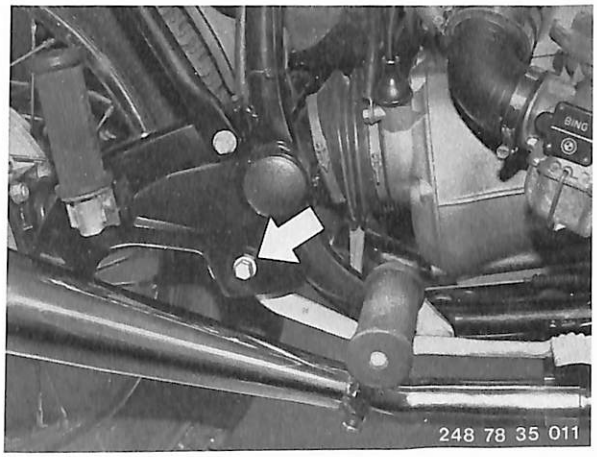

36 Wheels and Tires

Specifications		Page 36– 0/3
Specifications – 1981 models		36– 0/5
36 30 300	Front wheel – remove and install	36–30/1
36 30 320	Rear wheel – remove and install	36–30/2
36 30 028	Wheels – static balance	36–30/3
36 31 371	Bearings of front or rear wheel – replace	36–31/1
36 32 081	Lateral and radial runout of tire – check	36–32/1

Wheels and Tires

Specifications

Model	R 65
Type of wheel rim	pressure cast aluminum
Front rim size	1.85 B x 18
Rear rim size	2.50 B x 18
Max. radial runout in mm (in.)	0.9 (0.035) measured on rim flange without tire
Max. lateral runout in mm (in.)	0.5 (0.020) measured on rim flange without tire
Front tire size	3.25 S 18
Rear tire size	4.00 S 18
Max. tire unbalance measured on inside rim dia. in cmp equalling grams	170 8 . . . 9
Max. runout on side in mm (in.)	1.7 (0.067)
Tire pressure in bar (psi) Front wheel Solo **/above 160 km/h (100 mph)** Pillion **/above 160 km/h (100 mph)**	 1.9/2.1 (27/30) 2.1/2.1 (30/30)
Rear wheel Solo **/above 160 km/h (100 mph)** Pillion **/above 160 km/h (100 mph)**	 2.0/2.2 (28/31) 2.2/2.3 (31/33)
Extra pressure for driving at top speed over long time in bar (psi)	0.2 (3) more
Wheel bearing lubrication	**Brand name multi-purpose grease (drip point at 180° C / 355° F)**
Amount of grease per wheel in grams	10

Wheels and Tires

Specifications

Model	R 65
Max. wheel load solo in kg (lbs.) Front at 1.9 bar (27 psi) Rear at 2.0 bar (28 psi)	 160 (353) 245 (540)
Max. wheel load pillion in kg (lbs.) Front at 2.00 bar (28 psi) Rear at 2.25 bar (32 psi)	 178 (392) 270 (595)

Torque Values in Nm (ft lbs) + Friction Values in Ncm (in lbs)

Frictional torque of wheel bearings with axle nut tightened to specified tightening torque in Ncm (in. lbs.)	150 . . . 300 (13 . . . 26)
Nuts on stub axles, front and rear, in Nm (ft lbs)	45 . . . 50 (33 . . . 36)

Tighten all other bolts and nuts to common torque values as listed in tables from bolt/nut suppliers or the new BMW Standard 60002.0.

Wheels and Tires

Specifications 1981 Models

Model	R 65	R 65 LS
Type of wheel rim	pressure cast aluminium	BMW Aluminium-Compound
Front rim size	1.85 B x 18	2.15 B x 18
Rear rim size	2.50 B x 18	
Max. radial runout in mm (in.)	0.9 (0.035) measured on rim flange without tire	
Max. lateral runout in mm (in.)	0.5 (0.020) measured on rim flange without tire	
Front tire size	3.25 H 18	
Rear tire size	4.00 H 18	
Max. tire unbalance measured on inside rim dia. in cmp equalling grams	170 8 . . . 9	
Max. runout on side in mm (in.)	1.7 (0.067)	
Tire inflation pressure for cold tires in bar (psi)		

	One Person		Two Persons	
	Front	Rear	Front	Rear
up to 130 km/h (80 mph)	1.9 (27)	1.8 (26)	2.1 (30)	2.0 (28)
130 - 160 km/h (80 - 100 mph)	1.9 (27)	2.0 (28)	2.1 (30)	2.2 (31)
above 160 km/h (100 mph)	2.1 (30)	2.2 (31)	2.1 (30)	2.3 (33)

Important! Conform with local legislation on minimum tire tread depth!

Recommended (Minimum):
2 mm (0.080") up to 130 km/h (80 mph)
3 mm (0.120") above 130 km/h (80 mph)

Wheel bearing lubrication	Brand name bearing grease, temperature application range from − 30 (−22) to + 140° C (284° F), drip point 150 . . . 230° C (302 . . . 446° F), high corrosion inhibition, good water/oxidation resistance; e.g. Shell Retinax A
Grease volume per wheel	10 grams

Specifications 1981 Models

Model	R 65	R 65 LS
Max. wheel load in kg (lbs.)		
Front	140 (309)	
Rear	270 (595)	

Torque Values in Nm (ft lbs) + Friction Values in Ncm (in lbs)

Frictional torque of wheel bearings with axle nut tightened to specified tightening torque in Ncm (in. lbs.)	150 . . . 300 (13 . . . 26)
Nuts on stub axles, front and rear, in Nm (ft lbs)	45 . . . 50 (33 . . . 36)

Tighten all other bolts and nuts to common torque values as listed in tables from bolt/nut suppliers or the new BMW Standard 60002.0.

Front Wheel Bearings

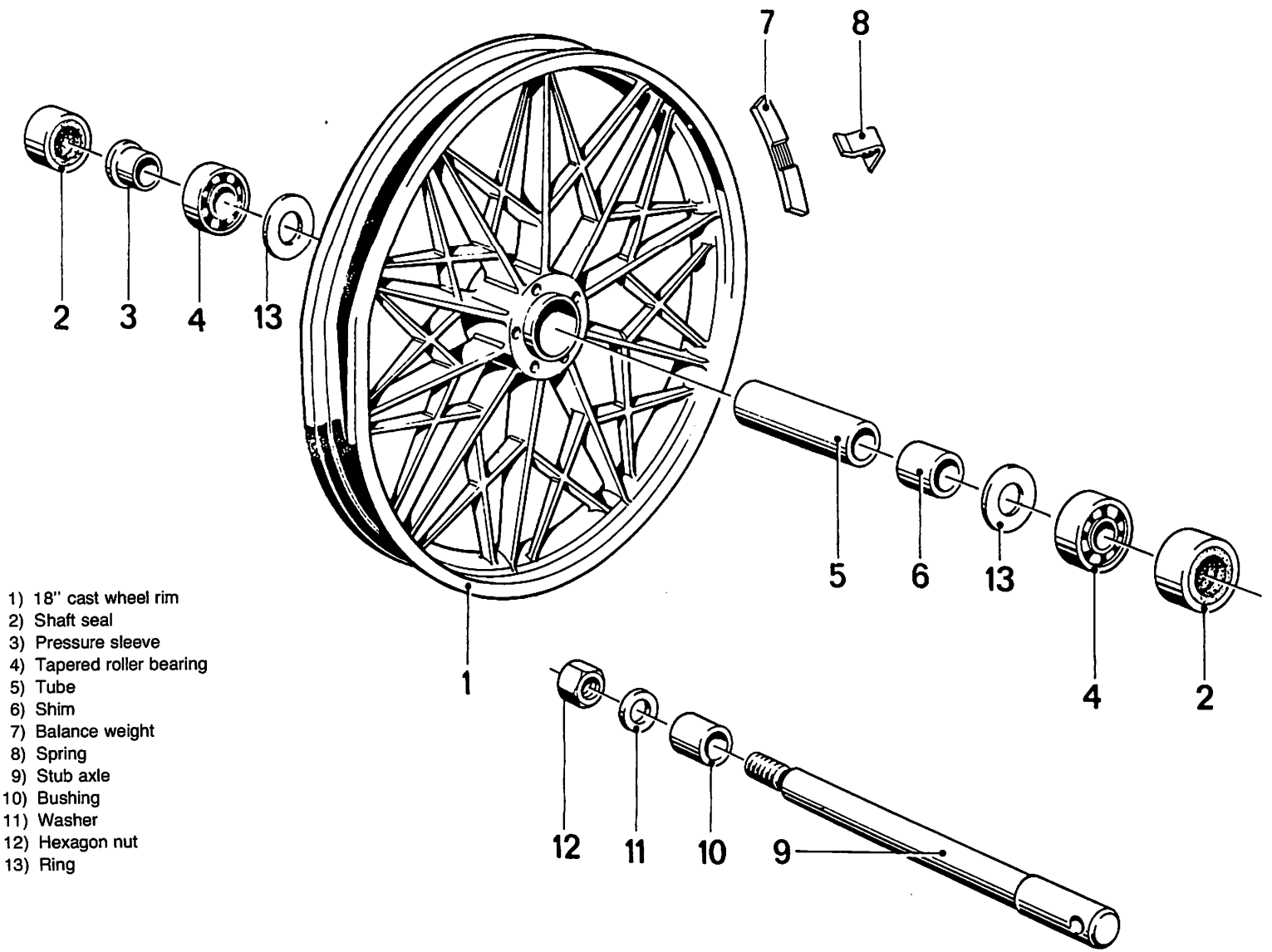

1) 18" cast wheel rim
2) Shaft seal
3) Pressure sleeve
4) Tapered roller bearing
5) Tube
6) Shim
7) Balance weight
8) Spring
9) Stub axle
10) Bushing
11) Washer
12) Hexagon nut
13) Ring

Rear Wheel Bearings

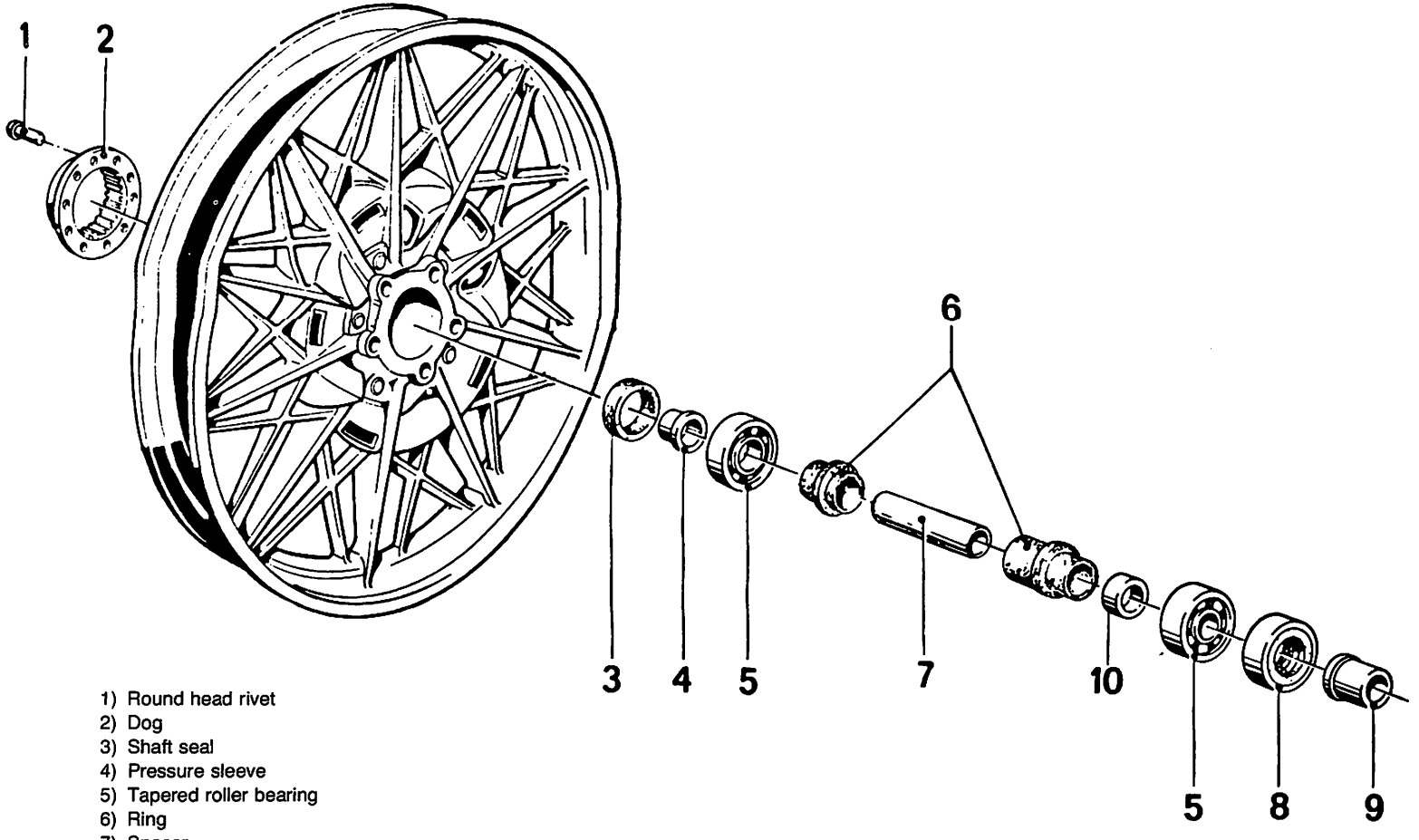

1) Round head rivet
2) Dog
3) Shaft seal
4) Pressure sleeve
5) Tapered roller bearing
6) Ring
7) Spacer
8) Shaft seal
9) Pressure sleeve
10) Shim

36 30 300 Removing and Installing Front Wheel

Place motorcycle on kick stand and put a support underneath the oil pan.

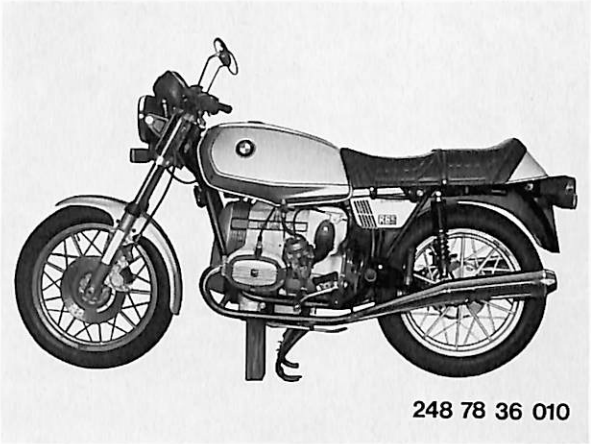

Unscrew axle nut (1) with washer, loosen socket head screws (2) with washers of front axle and pull out front axle (3), applying a mandrel.

Installation Note! When installing the front axle with a light coat of grease, first tighten the axle nut (counterholding with a mandrel, if necessary), then bottom fork suspension firmly several times and finally tighten the mounting screws. This procedure will prevent stress on the fork slide tubes.

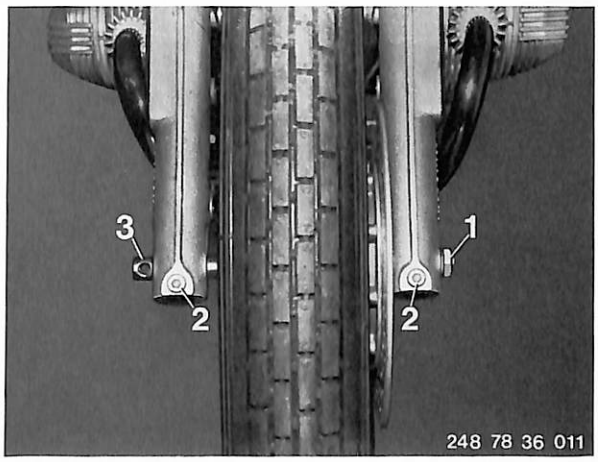

Remove front wheel toward front.

36 30 320 Removing and Installing Rear Wheel

Set up motorcycle on kickstand and also support underneath transmission.

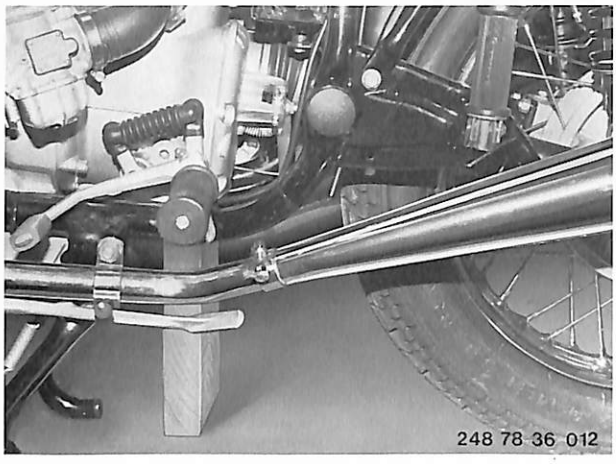

■

Unscrew stub axle nut on drive end and remove with washer (arrow).

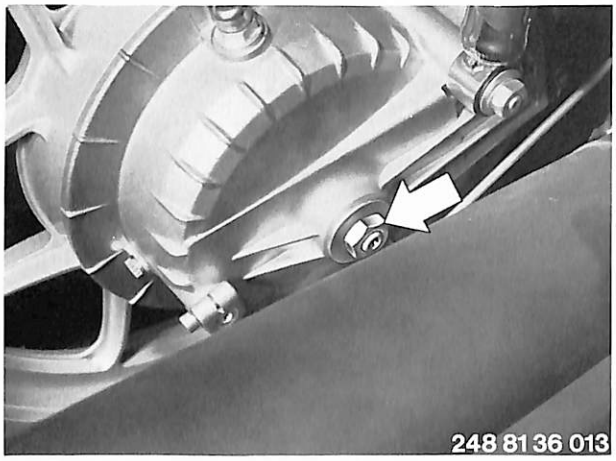

■

Loosen stub axle bolt nut (arrow) on left control arm.

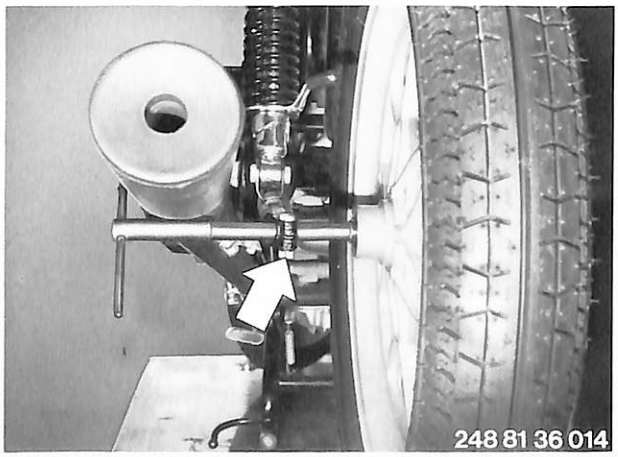

■

Pull road wheel off of final drive and remove, tilting the motorcycle toward right slightly.

Installation: When installing clean shaft and spline thoroughly and lubricate lightly with a viscous grease. Push in stub axle while turning. After tightening stub axle nut (1) bottom motorcycle suspension and then tighten bolt (2). Cross bore in head of axle faces down (arrow).

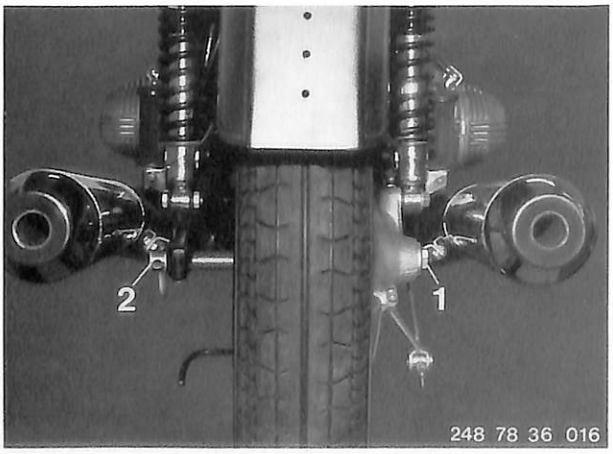

36 30 028 Balancing Wheels Statically

Insert balancing shaft (1) through wheel bearings and preload bearing slightly with knurled nut (2).

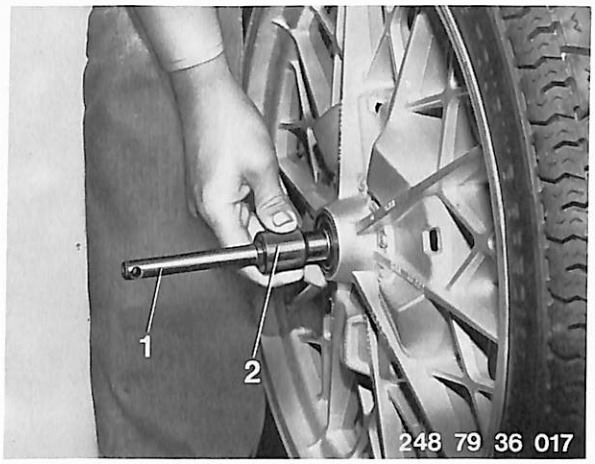

Place wheel on balancing fixture, BMW No. 36 3 600, and let it rotate until it stops on its own. Install weight (arrow) opposite the heaviest point.

Note:
A correctly balanced wheel will stop in any position.

Balance weights are installed on cast wheels with the help of assembly pliers, BMW No. 36 3 830.
Apply pliers on rim as close as possible, squeeze together and slide on retaining clip for weight. The necessary weight is installed to equal parts on the left and right sides of the rim opposite each other.

Important! Max. balance weight: 60 grams.

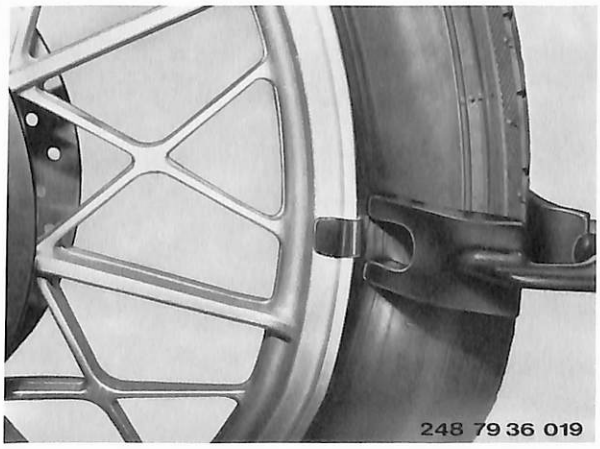

36 31 371 Removing and Installing Wheel Bearings of One Wheel (Front or Rear)

Remove and install front wheel 36 30 300.

Remove and install rear wheel 36 30 320.

Lift out seal with a screwdriver (arrow).
Remove thrust ring and taper roller bearing.

Installation: Knock in seal flush.

Pull bearing shell out of hub with a Kukko puller, BMW No. 00 8 551.

Installation: To install bearing shell, heat hub to about 80° C and knock in shell with Special Tool BMW No. 00 5 550.

1 Seal
2 Thrust ring
3 Tapered roller bearing
4 Shim
5 Bearing shell
6 Spacer

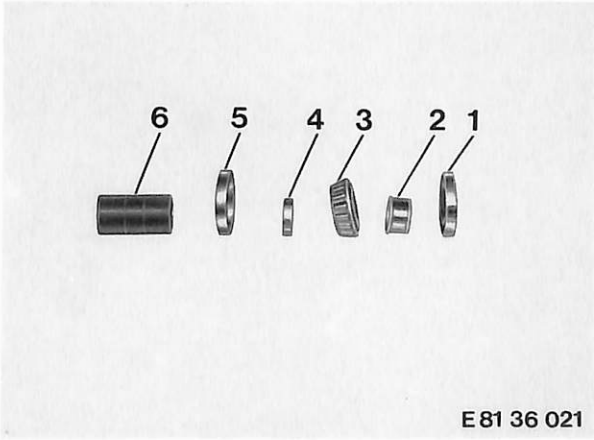

Insert stub axle through wheel hub and preload with 50 mm spacer (arrow) and stub axle nut bearing.
Place friction torque tester with adapter and wrench socket on stub axle nut and check bearing position.
Refer to Technical Data for friction value and tightening torque.

Note: Spacer for rear wheel is 85 mm long!

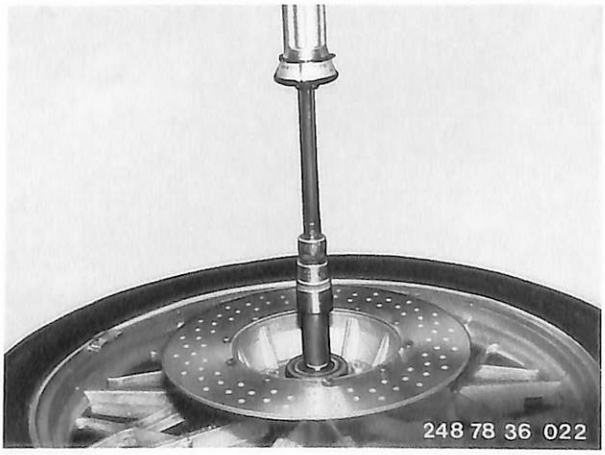

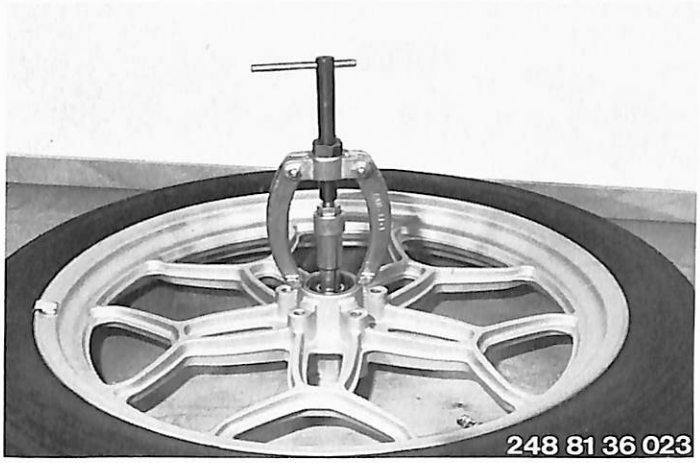

R 65 LS (Grooved Ball Bearing):

Remove brake discs (only front wheel). Place wheel rim with hub on hotplate and heat to about 80° C (check temperature with a thermocolor pencil).

Pull out ball bearing with Kukko puller no. 21/3 and support bridge 22-1.

Drive new bearing into hub while still warm with impact mandrel, BMW No. 00 5 550.

36 32 081 Checking Lateral and Radial Runout of Tire

Mount balancing shaft in wheel.
Place wheel on balancing stand, BMW No. 36 3 600. Stop lateral and measuring shaft with a pin (arrow).

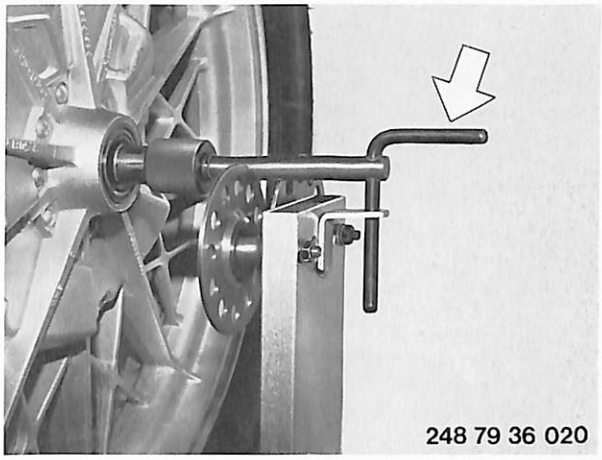
248 79 36 020

Measure lateral runout.

Apply dial gauge with gauge shoe on flank of center groove in tire against stop and set dial gauge to zero.

Turn wheel carefully.

See Specifications for permissible lateral runout.

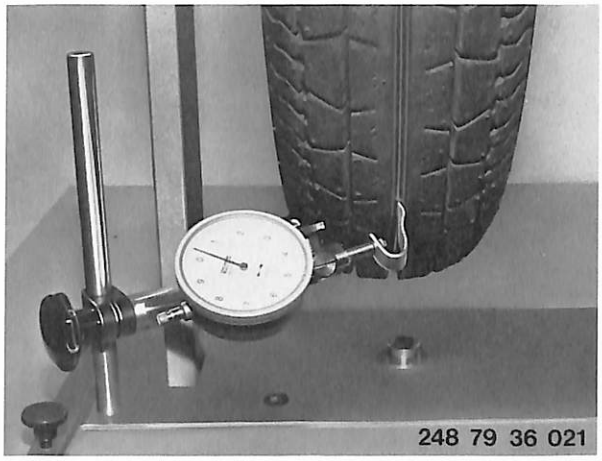
248 79 36 021

Measure radial runout.

Apply dial gauge with gauge wheel on bottom surface of center groove in tire.

Turn wheel slowly.

See Specifications for permissible radial runout.

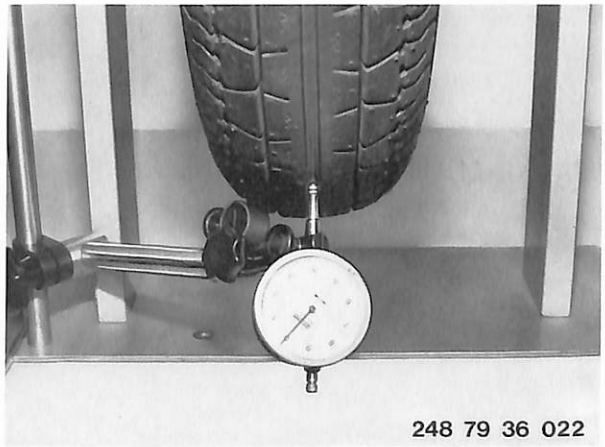
248 79 36 022

46 Frame

Specifications		Page 46– 0/3
Specifications – 1981 models		46– 0/5
46 52 000	Kickstand – remove and install	46–52/1
46 51 040	Toe offset – check (with gauge)	46–51/1
46 51 501	Frame front section – check	46–51/2
46 53 000	Side prop – remove and install	46–52/2
46 61 000	Front wheel fender – remove and install	46–61/1
46 62 000	Rear wheel fender – remove and install	46–61/2
46 63 020	Cockpit, R 65 LS – remove and install	46–63/1
46 63 025	Cockpit upper section, R 65 LS – remove and install	46–63/3

Specifications

Model	R 65
Frame	Double loop steel pipe frame made of welded oval pipe with bolted rear frame section (not suitable for sidecar)
Location of data plate	on steering head, right end plate
Location of chassis number	on steering head, right end plate
Motorcycle Dimensions and Weights Max. width (engine) in mm (in.)	688 (27.086)
Max. height without mirror in mm (in.) (motorcycle not loaded)	1080 (42.520)
Saddle height, unloaded in mm (in.)	770 (30.315)
Max. length in mm (in.)	2180 (85.827)
Wheelbase in mm (in.)	1390 (54.724)
Max. track offset in mm (in.)	4 (0.157)
Ground clearance with load from rider weighing 75 kg (165 lbs) in mm (in.)	105 (4.134)
Curbweight plus lubricants, 24 ltr. (25 qts) of fuel and tools in kg (lbs)	205 (452)
Max. total weight = curbweight plus persons and luggage in kg (lbs)	398 (540)
Max. wheel load solo in kg (lbs.) Front at 1.9 bar (27 psi) Rear at 2.0 bar (28 psi)	 160 (353) 245 (540)
Max. wheel load pillion in kg (lbs) Front at 2.00 bar (28 psi) Rear at 2.25 bar (32 psi)	 178 (392) 270 (595)
Max. persons incl. rider	2

Torque Values in Nm (ft lbs)

Frame rear section mounting screws	25 (18)	Kick stand mounting screws	43 . . . 48 (31 . . . 35)

Tighten all other bolts and nuts to common torque values as listed in tables from bolt/nut suppliers or the new BMW Standard 60002.0.

Specifications 1981 Models

Model	R 65	R 65 LS
Frame	Double loop steel pipe frame made of welded oval pipe with bolted rear frame section (not suitable for sidecar)	
Location of data plate	on steering head, right end plate	
Location of chassis number	on steering head, right end plate	
Motorcycle Dimensions and Weights Max. width (engine) in mm (in.)	688 (27.086)	
Max. height without mirror in mm (in.) (motorcycle not loaded)	1080 (42.520)	
Saddle height, unloaded in mm (in.)	770 (30.315)	
Max. length in mm (in.)	2180 (85.827)	
Wheelbase in mm (in.)	1390 (54.724)	
Max. track offset in mm (in.)	4 (0.157)	
Ground clearance with load from rider weighing 75 kg (165 lbs) in mm (in.)	105 (4.134)	
Curbweight plus lubricants, 24 ltr. (25 qts) of fuel and tools in kg (lbs)	205 (452)	
Max. total weight = curbweight plus persons and luggage in kg (lbs)	398 (540)	
Max. persons incl. rider	2	

46 51 040 Measuring Toe Displacement (with Gauge)

Place motorcycle in gauge, placing fixture on floor or lifting platform for this purpose. Fold away or pull in stops (1) and slide (2), and push motorcycle into gauge and place on center stand.

Stop No.	For:
36 3 905	Cast wheels with drum brakes, 1978 models
36 3 908	Cast wheels with drum brakes, 1981 models
36 3 913	R 65 LS, 1982 models

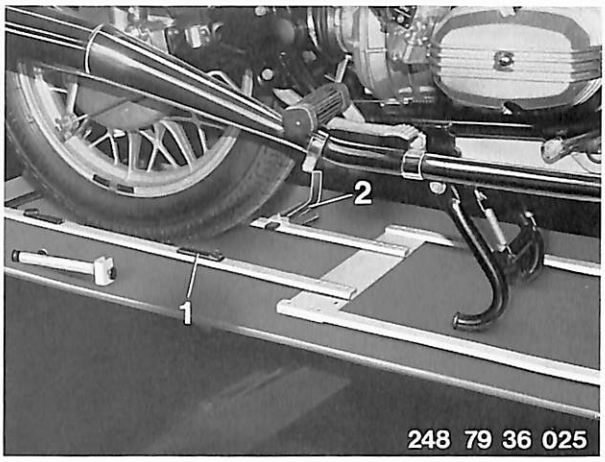

Place toe gauge on supports, position to about height of stub axles, adjustable supports toward rear. Fold out flaps and release slide lock (don't let it snap forward!). Adjust height with the adjustable supports that slide and stops rest on rim only.

Push gauge against rear wheel firmly from the right side so that both stops rest on the rim.

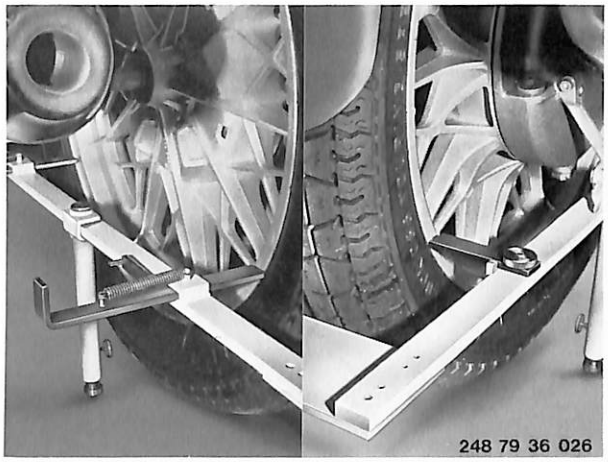

To be able to measure the toe displacement, the front wheel must be aligned parallel to both measuring rails (arrow). A ruler is used to measure the distance from the front wheel rim to the measuring rail, front and rear, left and right. The difference of both distances is the amount of toe displacement.

The toe displacement can be corrected slightly by moving the control arm.

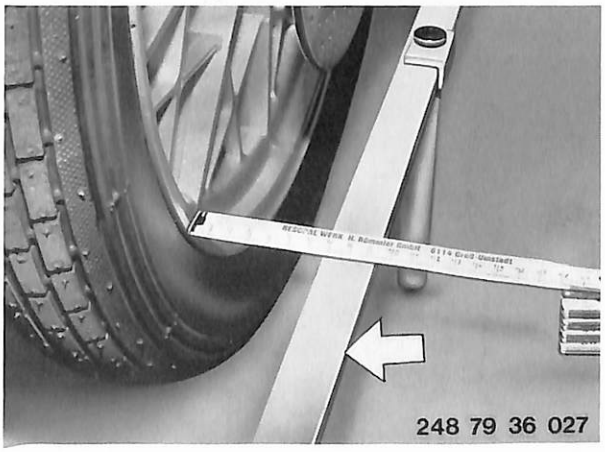

46 51 501 Checking Frame Front Section

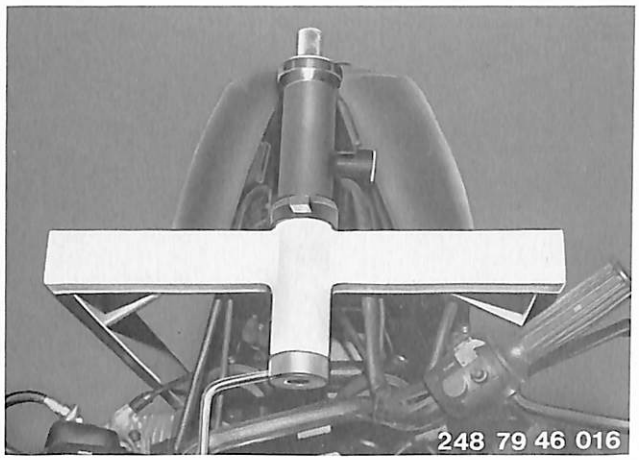

Remove and install front wheel fork 31 42 100.
Bearing shells remain in steering head.
Remove and install left and right carburetors 13 10 100.
Unscrew swinging arm bearing bolts.
Apply frame gauge, BMW No. 46 5 600, on steering head from below and secure with spindle and nut.

■

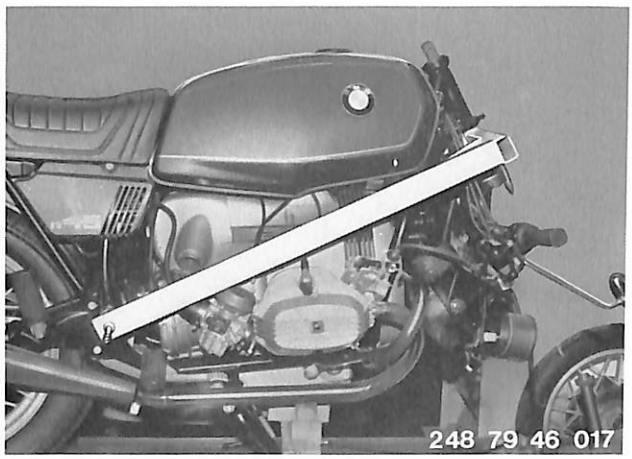

Screw measuring discs in left and right control arm takeups of frame.
Insert measuring mandrels in frame gauge and align gauge that the distance to the measuring disc is the same on left and right sides.

■

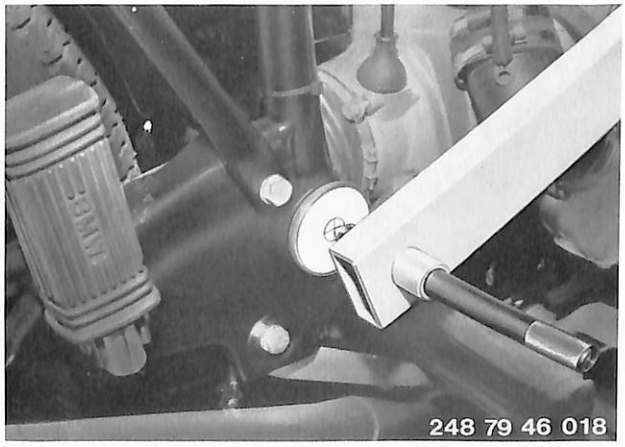

The frame is okay, if the tips of both measuring mandrels are approximately at the same position with the tolerance range on left and right sides.

■

46 52 000 Removing and Installing Kick Stand

Jack up motorcycle underneath oil pan until the kick stand clears ground.

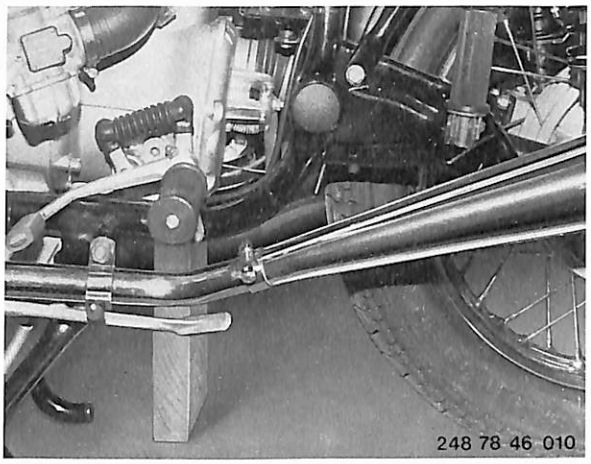

Pull down spring on left and right sides of kick stand (direction of arrow) and disconnect.

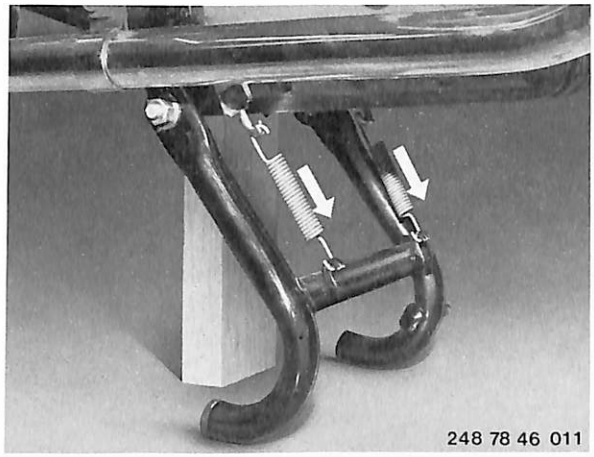

Unscrew left and right hexagon nuts (arrow), counterholding on inside with a socket wrench.
Remove kick stand toward front.

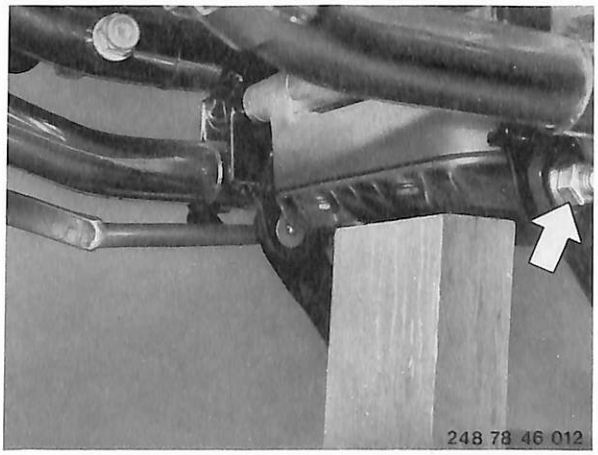

46 53 000 Removing and Installing Side Prop

Disconnect springs for side prop in direction of arrow.

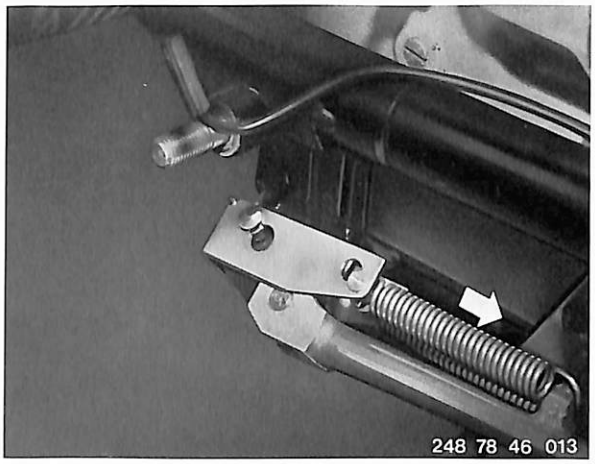

Push bracket forward in direction of arrow, so that pin can be knocked out from below.

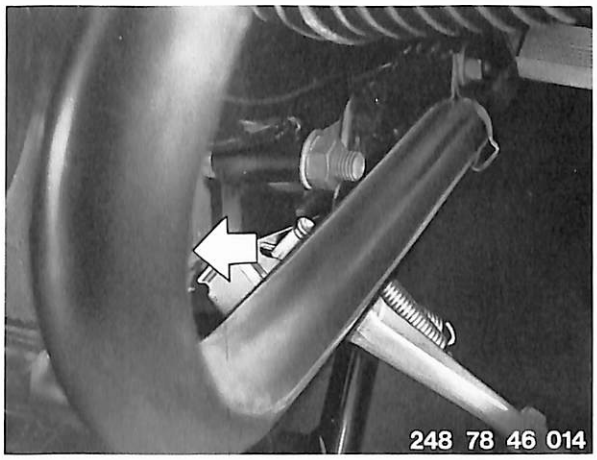

Press out pin from side prop and remove.

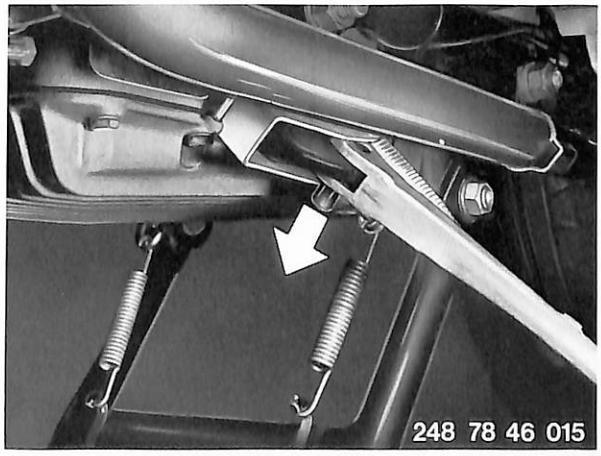

Removing and Installing Side Prop of 1981 Models

Remove and install exhaust assembly 18 00 020.
Disconnect springs in direction of arrow.

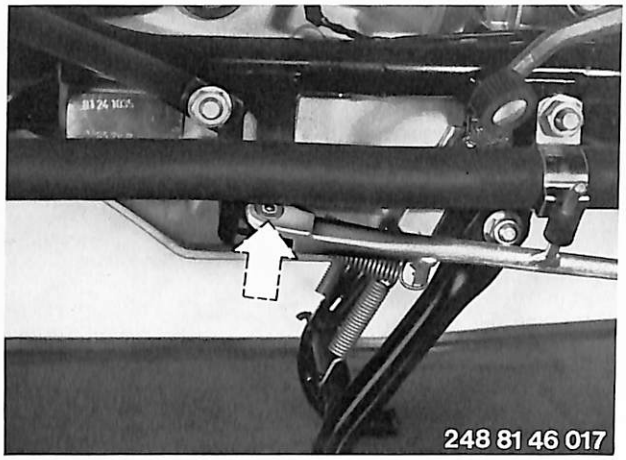

Unscrew socket head screw (arrow) and take off side prop.

46 61 000 Removing and Installing Front Wheel Fender

Remove 2 socket head screws from each, left and right, side of section plate.
Unscrew four cap nuts on fender to replace a fender without a section plate.

Installation Note! Don't forget the rubber washers.

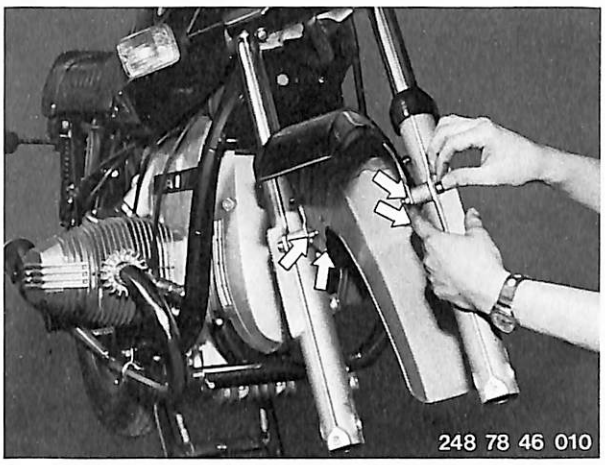

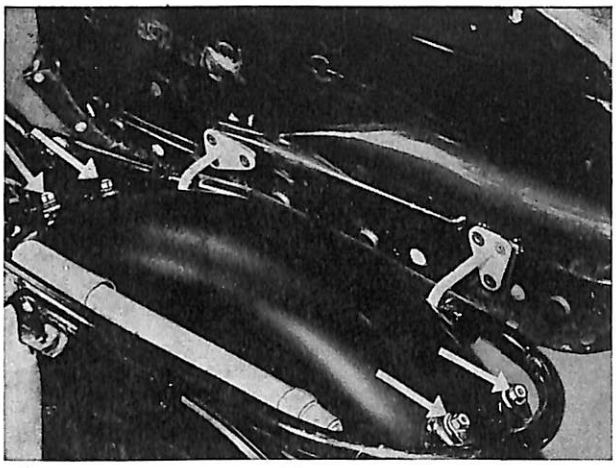

46 62 000 Removing and Installing Rear Wheel Fender

Disconnect ground wire from battery.

Unfold double seat and remove 4 hexagon head screws with washers, rubber washers and stop nuts (arrow).

■

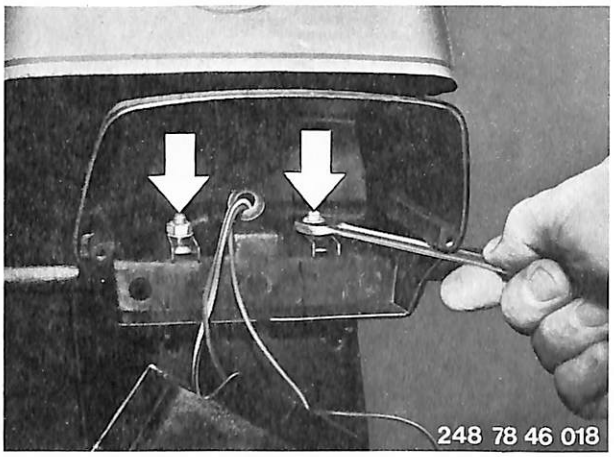

Remove both phillips screws of tail light and take off lens with reflector.

Unscrew mounting screws with washers and nuts (arrow). Remove tail light housing with turn signal carrier from guard.

■

Trouble-shooting – frame and suspension

Fault	Cause	Remedy
Telescopic forks sticking	Forks distorted	Unscrew quick-release axle and sheet metal pressing mount Compress forks fully several times Tighten bolts and nuts to correct torques
Unsteady straightline running	Defective steering head bearings	Renew
	Steering head bearings out of adjustment	Reset
	Tire or rim runout	Check vertical and lateral runout and renew affected items
	Defective wheel bearing	Renew or adjust
	Tire of wrong type or make	Renew (use only approved tire)
	Swinging arm bearing preload incorrect	Check setting, correct if necessary
	Defective swinging arm bearing	Renew and adjust
	One damper defective	Check dampers (install only dampers with approximately identical traction and compression stages)
	Track misalignment too great	Check and adjust if necessary (see Specifications)

46 63 020 Removing and Installing Cockpit for R 65 LS

Unscrew mounting screws for left and right trim panels (arrow) and remove trim panels from above at an angle.

248 82 46 030

Unscrew socket head screws of clamps (arrow) on left and right sides.

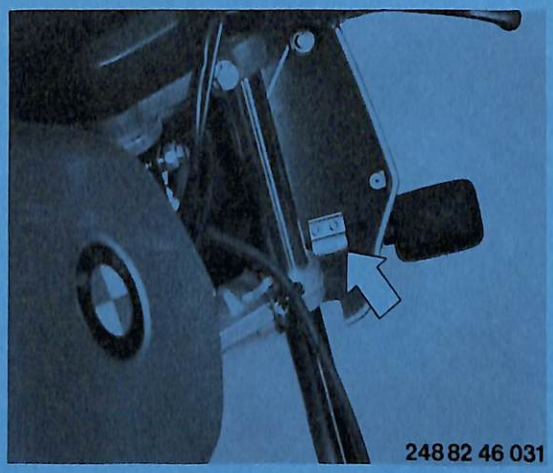
248 82 46 031

Unscrew lenses of front turn signals and pull off wires (arrow) on reflector housing. Pull turn signal housing out of cockpit lower section.

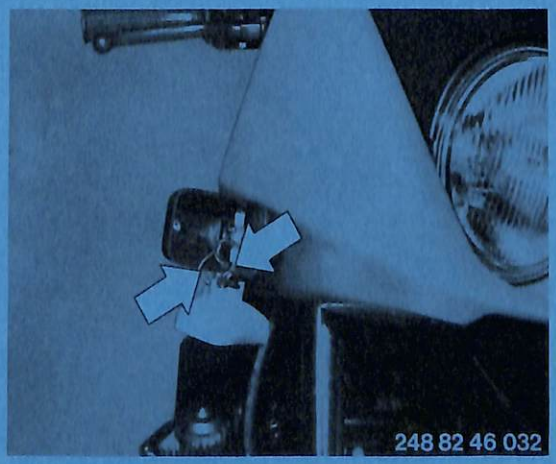
248 82 46 032

Unscrew mounting screws for cockpit lower section (arrow) on left and right sides.

248 82 46 033

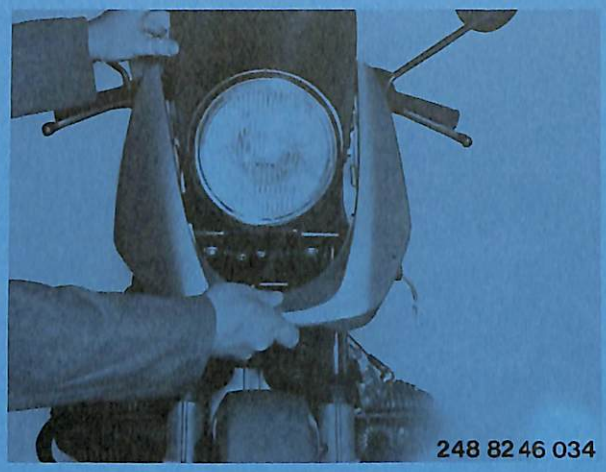

Pull off cockpit lower section forward at an angle.
Pull out turn signal wires toward inside.

■

Note:
Upper mounting point of cockpit lower section is only clamped (arrow) in instrument trim panel.

■

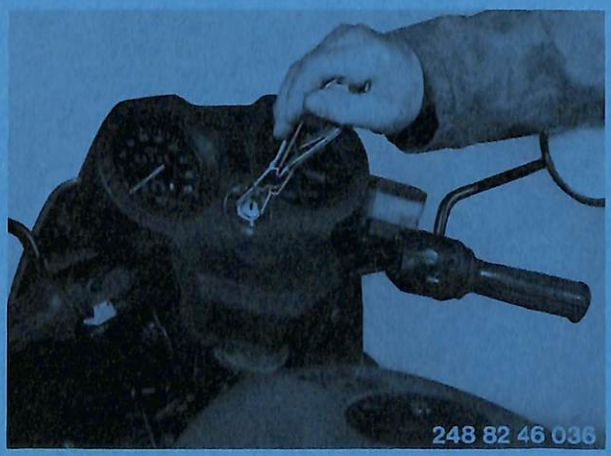

Unscrew round nut of ignition lock with a special circlip pliers.

■

Pull off instrument trim panel in direction of arrow.
Pull turn signal indicator lamps (1 and 2) out of holders through instrument openings.

■

46 63 025 Removing and Installing Cockpit Upper Section for R 65 LS

Unscrew round nut on ignition lock with a special circlip pliers.

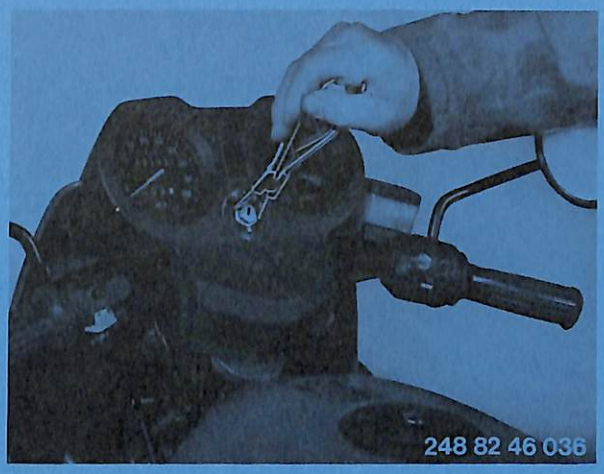

Push trim upper section together on headlight with both thumbs (arrows) until retaining tabs (1 and 2) disengage.

Push trim upper section out of top clamps in direction of arrow.

Pull bulb holders for turn signal indicator lamps (1 and 2) out of trim upper section.

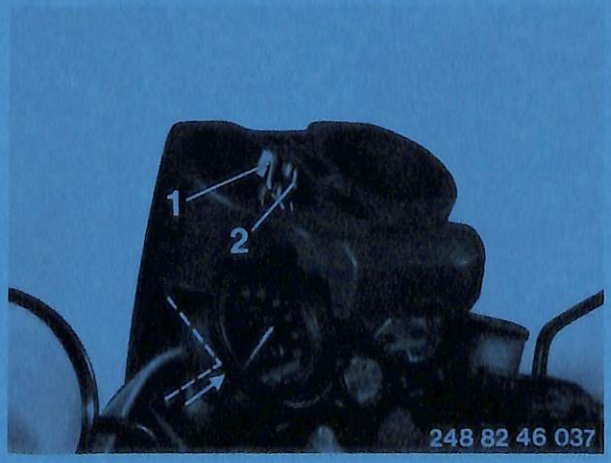

51 Equipment

51 25 030 Steering lock – remove and install . . . . . Page 51–25/1
51 25 050 Seat lock – remove and install 51–25/1
51 25 060 Seat lock cylinder – remove and install 51–25/2

51 25 030 Removing and Installing Steering Lock

Pry off cover (arrow) with a screwdriver.

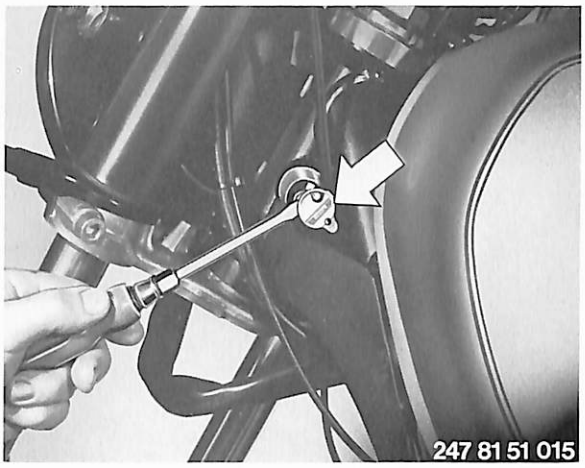

Insert key in lock and turn anticlockwise against stop. Pull out lock cylinder.

51 25 050 Removing and Installing Seat Lock

Unscrew both phillips screws (arrows). Remove cover and lock housing.

Installation:
First install rear screw finger tight and then the front screw, making sure spring fits correctly!

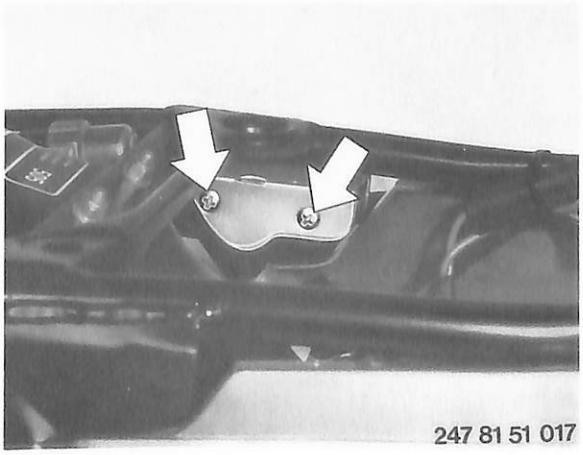

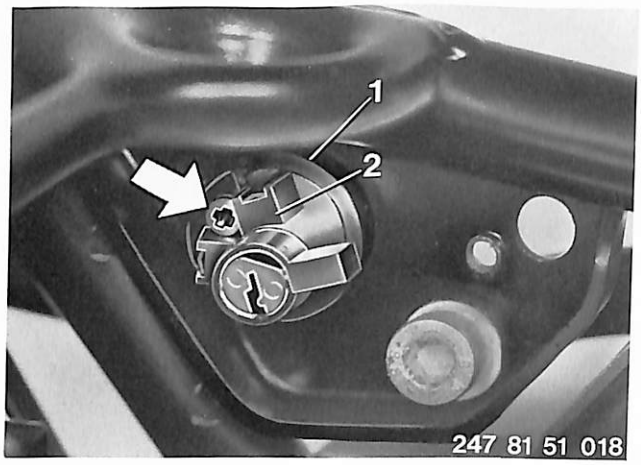

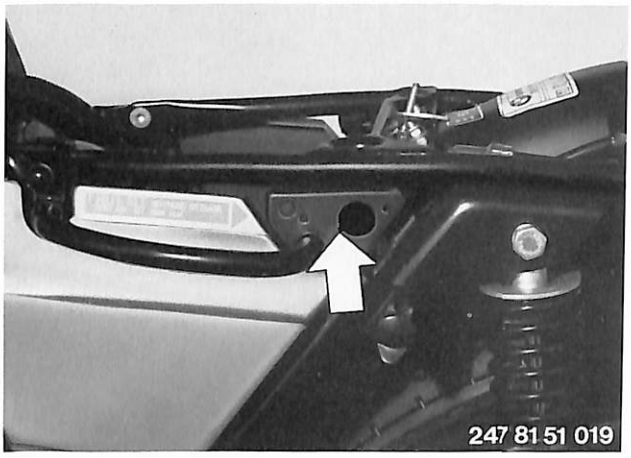

51 25 060 Removing and Installing Seat Lock Cylinder

Remove and install seat lock 51 25 050.
Unscrew phillips screw (arrow). Pull circlip (1) and lock cylinder (2) apart.

■

Installation:
Tab of lock cylinder must engage in groove of lock plate (arrow).

■

52 53 000 Removing and Installing Seat

Remove retainer (arrow) on front and rear hinges (press away to the side with a screwdriver). Fold up seat, pull back and remove carefully.

52 Seats

52 53 000 Seat, removing and installing . . . . . .Page 52–53/1

52 53 000 Removing and Installing Seat

Remove circlip from rear hinge (arrow), fold up seat, pull toward rear and remove.

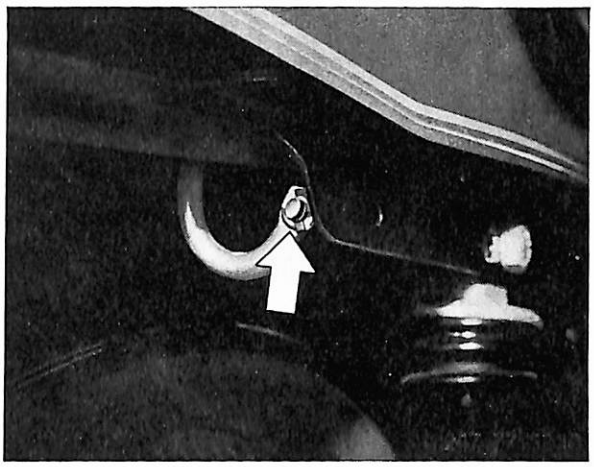

61 General Electrical System

Specifications and wiring diagrams . . . . . Page 61– 0/3
Specifications – 1981 models 61– 0/5
61 21 010 Battery – remove and install 61–21/1
61 21 100 Battery console – remove and install 61–21/2
61 31 350 Flasher – remove and install 61–31/1
61 31 367 Buzzer – remove and install 61–31/1
61 31 365 Buzzer relay – remove and install 61–31/2
61 31 400 Starter relay – remove and install 61–31/2
61 33 000 Horn – remove and install 61–33/1

General Electric System

Specifications

Model	R 65
Horn	Electromagnetic striking horn 335 Hz
Battery (VARTA) Voltage in V	12
Capacitance in Ah	16
Pole with ground	minus
Flasher (Bosch)	0335 200 043 (12 V 2 (4) x 21 W 13 . . . 7 W)
Fuse (two)	8 amperes

Explanations for Wiring Diagram R 45 – R 65

Cable coding

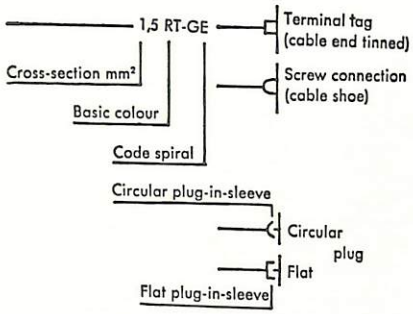

BL = blue	RT = red
BR = brown	SW = black
GE = yellow	VI = violet
GR = grey	WS = white
GN = green	TR = transparent

1 Emergency off switch
2 Starter switch
3 Turn signal front right
4 Headlight
  a High beam
  b Low beam
5 Turn signal front left
6 Horn switch
7 Dimmer and light flasher
8 Turn signal switch
9 Six pin plug
10 Clutch switch
11 Speedometer scale light
12 Ignition switch
13 Indicator lamps left and right
14 Tachometer
  a High beam indicator lamp (blue)
  b Scale light
  c Battery charge ind. lamp (red)
  d Idle indicator lamp (green)
  e Oil pressure ind. lamp (orange)
  f Light diode for speed warner
15 Eight pin plug for tachometer
16 Hand brake light switch
17 Six pin plug (white)
18 Six pin plug (beige) for hazard lg.
19 Six pin plug (gray)
20 Six pin plug (black)
21 Six pin plug (blue) for opt. equip.
22 Two pin plug
23 Six pin plug (black)
24 Horn
25 Buzzer
26 Oil pressure switch
27 Transmission idle switch
28 Stop light switch
29 Box right
  a Flasher
  b Fuses
  c Six pin plug (black)
30 Two pin plug
31 Two pin plug
32 Two pin plug
33 Diode
34 Starter relay
35 Relay for acc. turn signal control
36 Ignition coil front
37 Ignition coil rear
38 Spark plug with connector
39 Contact breaker with capacitor
40 Battery
41 Starter
42 Alternator
43 Regulator
44 Diode plate
45 Two pin plug
46 Turn signal rear right
47 Tail light
  a Stop light
  b Tail + license plate light
48 Turn signal rear left

General Electric System

Specifications 1981 Models

Model	R 65	R 65 LS
Horn	Electromagnetic striking horn 335 Hz	
Battery (BMW-Mareg) Voltage in V	12	
Capacitance in Ah	16	
Pole with ground	minus	
Flasher	Wehrle (12 V 2 (4) x 21 W 13 . . . 7 W)	
Fuse (two)	8 amperes	

Explanations of Wiring Diagram for R 65–R 65 LS (1981 US Models)

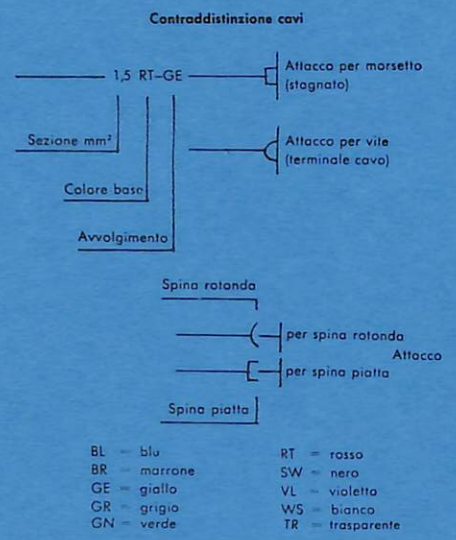

1 Turn signal front right
2 Headlight
  a High beam
  b Low beam
  d Marker light
3 Turn signal front left
4 Turn signal indicator left and right
5 Speedometer scale light
6 Ignition/light switch
7 Hand brake light switch
8 Plug for hand brake light switch
9 Tachometer
  a High beam indicator lamp (blue)
  b Scale light
  c Battery charge indicator lamp (red)
  d Idle indicator lamp (green)
  e Oil pressure indicator lamp (red)
10 8-pin plug for tachometer
11 Plug for special equipment
12 Plug for left handlebar switch (red)
13 Plug for left handlebar switch (black)
14 Horn switch
15 Headlight dimmer/flasher switch
16 Turn signal switch
17 Horn
18 Emergency off switch
19 Starter switch
20 Clutch switch
21 Plug for right handlebar switch (white)
22 Plug for clutch switch
23 Fuse box
24 Starter relay
25 Transmission switch
26 Oil pressure switch
27 Plug for transmission and oil pressure switches
28 Flasher
29 Foot brake light switch
30 Plug for foot brake light switch
31 Plug for engine
32 Plug for tail lights
33 Double spark ignition coil
34 Spark plugs with end caps
35 Plug for ignition trigger
36 Ignition trigger (hall sensor)
37 TCI control unit
38 Battery
39 Starter
40 Diode plate
41 Regulator
42 Alternator
43 Turn signal rear right
44 Tail lights
  a Stop light
  b Tail and license plate light
45 Turn signal rear left
46 Plug for ignition
47 Voltmeter connection

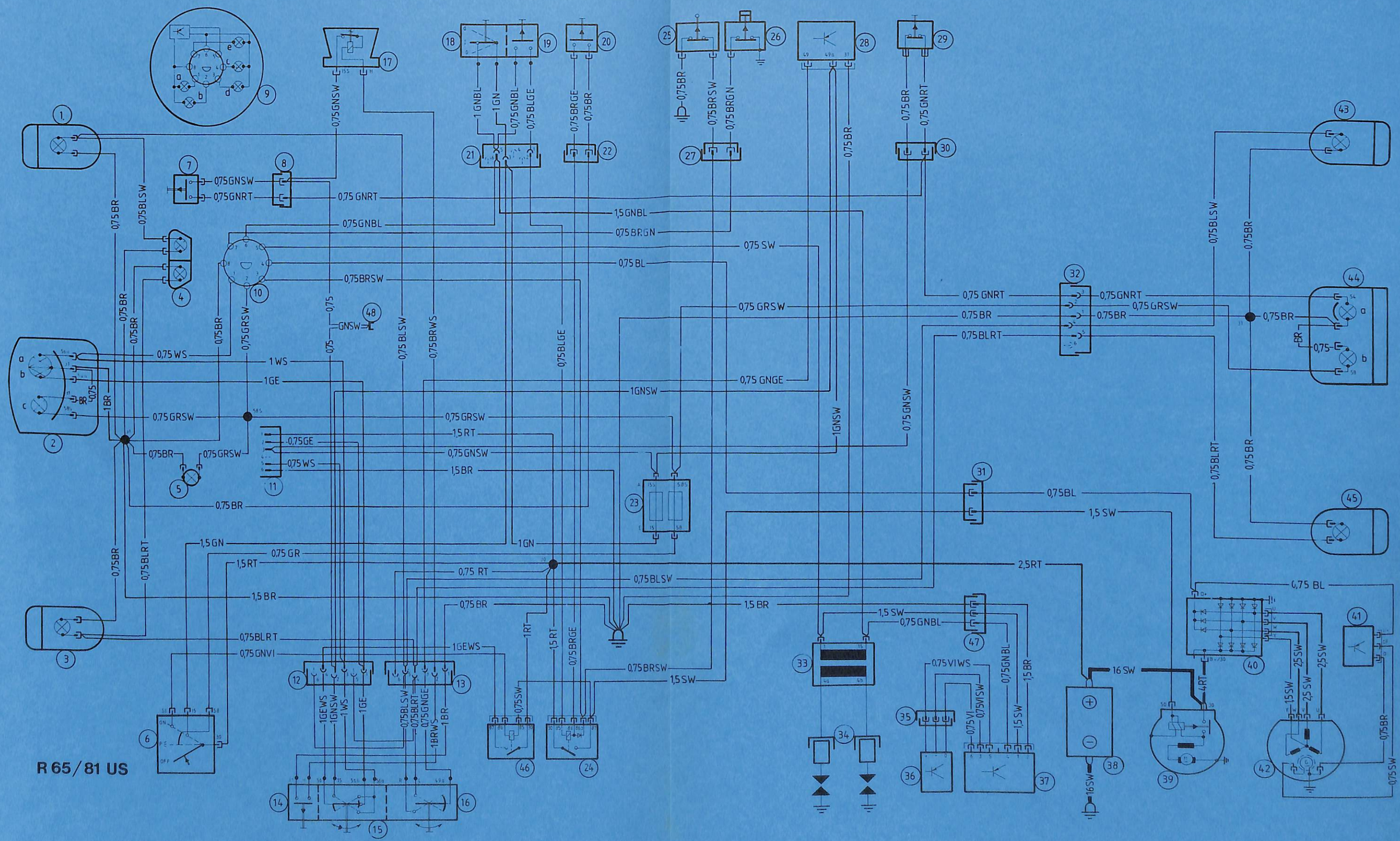
0,75 GNSW
0,75 GNRT
0,75 GNRT
0,75 GNBL
0,75 BRSW
0,75 BR
0,75 BLSW
0,75 WS
1 WS
1 GE
0,75 GRSW
0,75 BR
0,75 GRSW
1 GNBL
1 GN
0,75 GNBL
0,75 BLGE
0,75 BRGE
0,75 BR
0,75 BRSW
0,75 BRGN
0,75 BR
0,75 GNRT
1,5 GNBL
0,75 BRGN
0,75 SW
0,75 BL
0,75 GRSW
0,75 GNGE
1 GNSW
0,75 GRSW
1,5 RT
0,75 GNSW
1,5 BR
0,75 GE
0,75 WS
0,75 BR
1,5 GN
0,75 GR
1,5 RT
0,75 RT
1,5 BR
0,75 BR
0,75 BLRT
0,75 GNVI
1 GEWS
1 GNSW
1 WS
1 GE
0,75 BLSW
0,75 BLRT
0,75 GNGE
1 BRWS
1 BR
1 RT
1,5 RT
0,75 BRGE
0,75 SW
0,75 BRSW
1,5 SW
1 GN
0,75 BLSW
1,5 BR
1,5 SW
0,75 GNBL
0,75 VIWS
0,75 VI
0,75 VISW
0,75 GNBL
1,5 BR
1,5 SW
16 SW
16 SW
4 RT
0,75 BL
1,5 SW
2,5 RT
0,75 BL
1,5 SW
2,5 SW
2,5 SW
0,75 BR
0,75 BLSW
0,75 BR
0,75 BLRT
0,75 BR
0,75 SW
0,75 GNRT
0,75 GRSW
0,75 BR
0,75 BLRT
0,75 BR
0,75 BR
0,75 BR

R 65/81 US

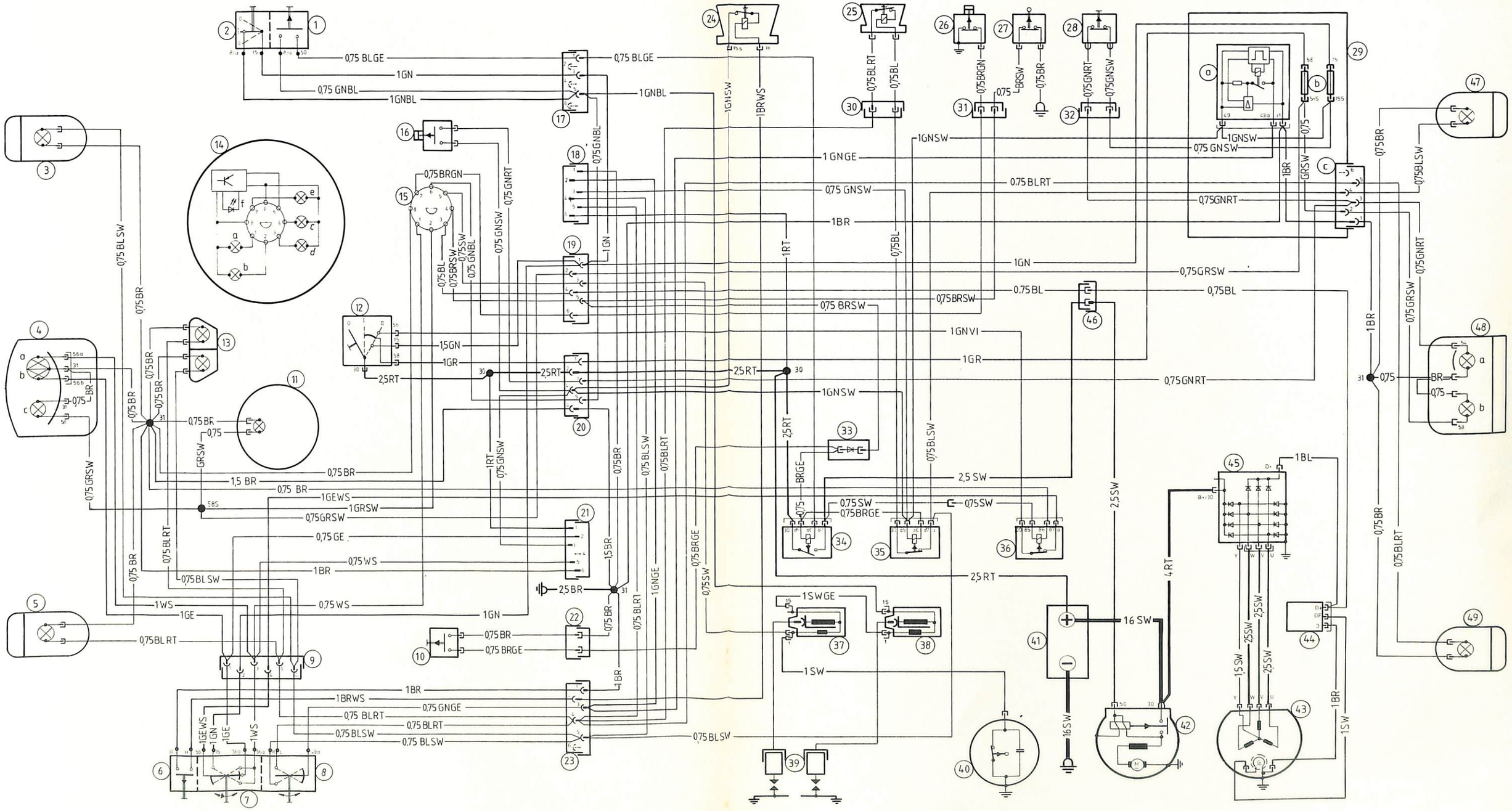
0,75 BLGE
1GN
0,75 GNBL
1GNBL
0,75 BLGE
1GNBL
0,75 BLSW
0,75 BR
0,75 GRSW
0,75 BLRT
1,5 BR
0,75 BR
1GEWS
1GRSW
0,75GRSW
0,75 GE
0,75 WS
1BR
0,75 BLSW
1WS
1GE
0,75 WS
1GN
0,75 BLRT
0,75 BR
0,75 BRGE
1BR
1BRWS
0,75 GNGE
0,75 BLRT
0,75 BLRT
0,75 BLSW
0,75 BLSW
0,75 BLSW
1GEWS
1GN
1GE
1WS
0,75BRGN
0,75 GNRT
0,75 GNSW
0,75BL
0,75BRSW
0,75SW
0,75 GNBL
0,75 GNBL
1GN
1,5GN
1GR
2,5RT
2,5RT
1GNSW
1RT
0,75 GNSW
0,75BR
0,75BLSW
0,75BLRT
2,5RT
1GNSW
1BRWS
0,75BL
1RT
1GNGE
0,75BRGE
0,75SW
2,5 BR
1,5BR
0,75BR
0,75BLRT
1GNGE
1BR
0,75BL
0,75BRGE
BRGE
0,75
0,75SW
0,75BRGE
1SWGE
1SW
0,75BRGN
0,75
BRSW
0,75BR
0,75GNRT
0,75GNSW
1GNSW
0,75 GNSW
1 GNGE
0,75 BLRT
0,75GNRT
1BR
1GN
0,75BRSW
0,75 BRSW
1GNVI
1GR
0,75GNRT
2,5 SW
0,75SW
0,75SW
2,5RT
1SW
16 SW
16SW
2,5SW
4RT
1BL
2,5SW
2,5SW
1,5SW
2,5SW
1BR
1SW
0,75GRSW
0,75BL
0,75BL
1BR
0,75GRSW
0,75GNRT
0,75BR
0,75
BR
0,75
0,75BLRT

61 21 010 Removing and Installing Battery

Remove left and right battery cover, first pulling out of front holding pad and then from both rear ones. Pull up cover at same time.

Pull left rubber clamp down in direction of arrow and right up, and disengage. Remove cover and disconnect wires from battery.

Pull out battery from left side with right hand, inclined toward rear and upward. Grab underneath battery with left hand and turn the right side toward front and up; the left side toward rear and down. This means reaching the position illustrated in the figure.

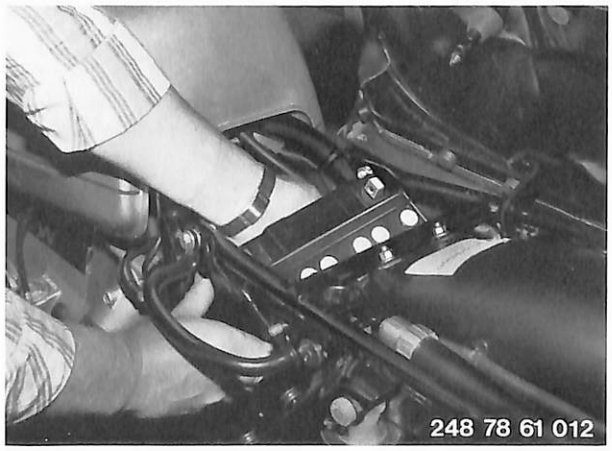

Tilt battery all the way on the left narrow side and pull out upward.

61 21 100 Removing and Installing Battery Console

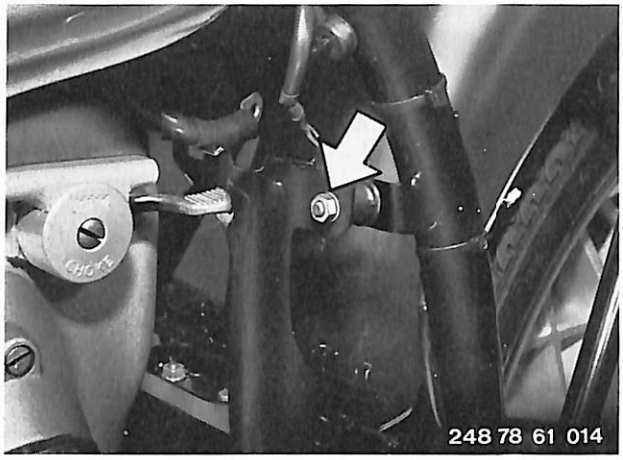

Remove and install battery 61 21 010.

Unscrew one each hexagon nut (arrow) on left and right sides of battery console at top.

■

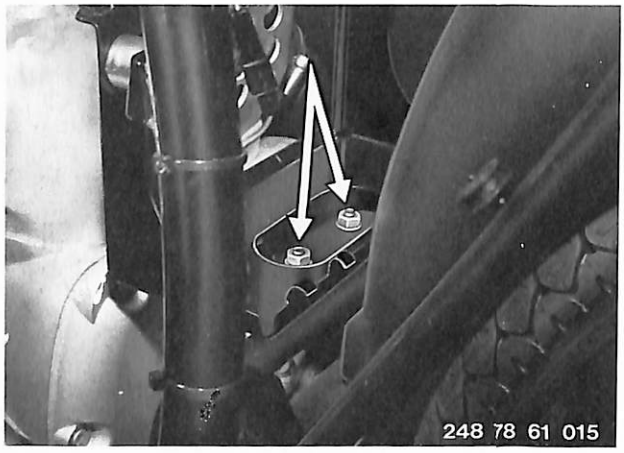

Also remove two bottom hexagon nuts (arrows).

■

61 31 350 Removing and Installing Flasher

Disconnect battery ground lead.
Take off right battery cover.
Take hold of flasher (arrow) with two fingers and pull out from above.

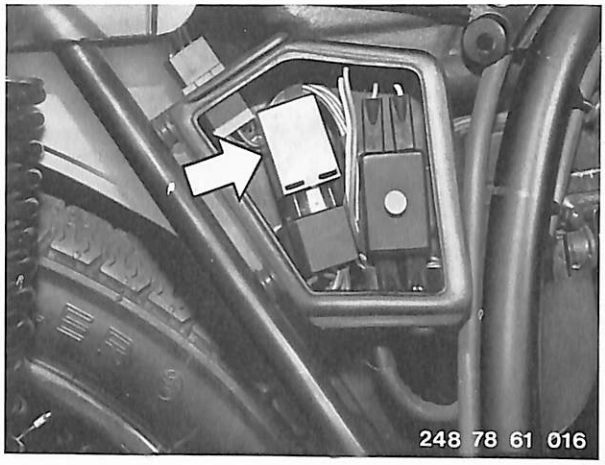

1981 Models

Disconnect battery ground lead.
Remove fuel tank 16 11 030.
Pull out flasher.

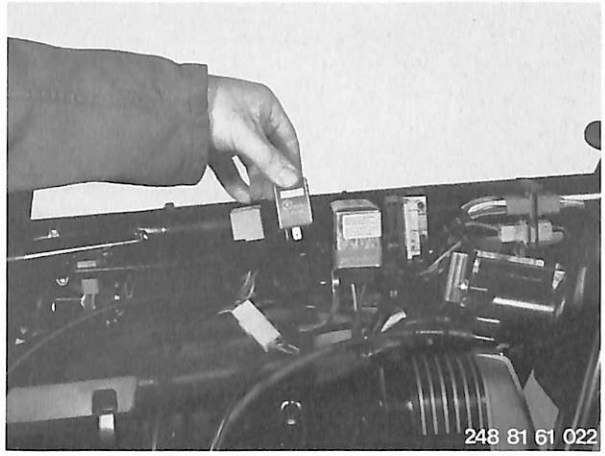

61 31 367 Removing and Installing Buzzer

Remove and install fuel tank 16 11 030.
Disconnect two pin plug (arrow).

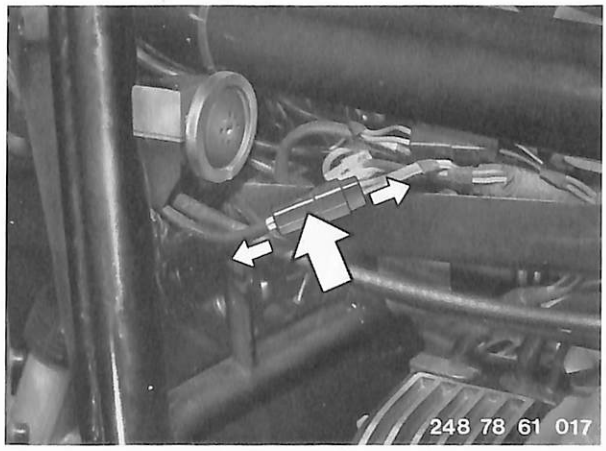

Pull off buzzer on holder from above.

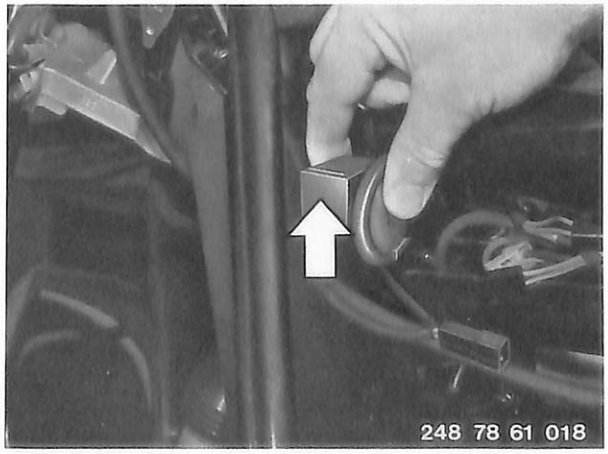

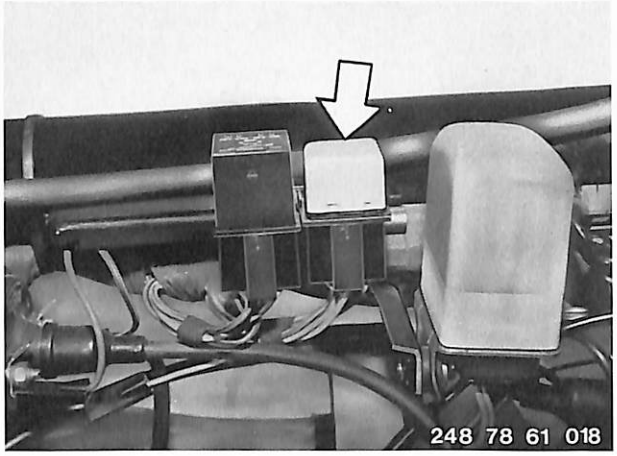

61 31 365 Removing and Installing Buzzer Relay

Remove and install fuel tank 16 11 030.

Pull relay (arrow) out of socket.

■

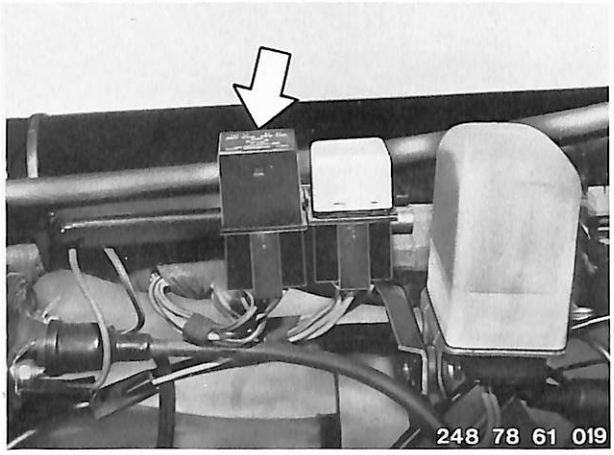

61 31 400 Removing and Installing Starter Relay

Remove and install fuel tank 16 11 030.

Pull starter relay (arrow) out of socket.

■

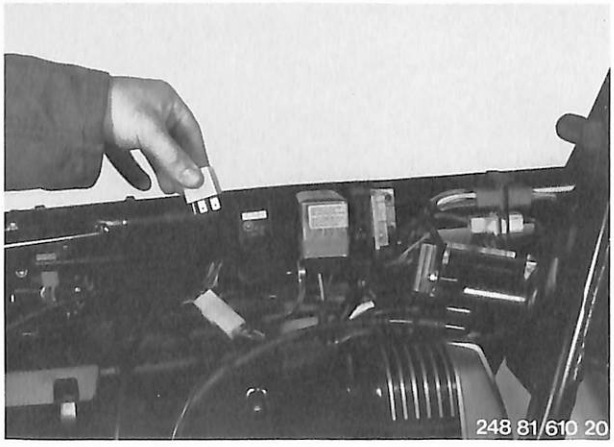

Same is applicable to 1981 models.

61 31 365 Removing and Installing Buzzer Relay

Remove and install fuel tank – 16 11 030.

Pull out relay (arrow) from console.

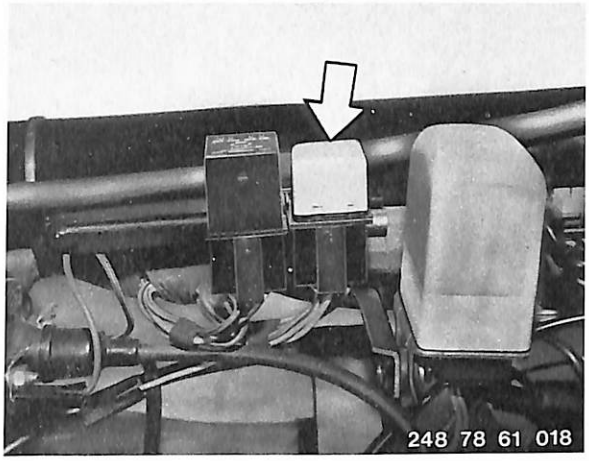

61 31 400 Removing and Installing Start Relay

Remove and install fuel tank – 16 11 030.

Pull out relay (arrow) from console.

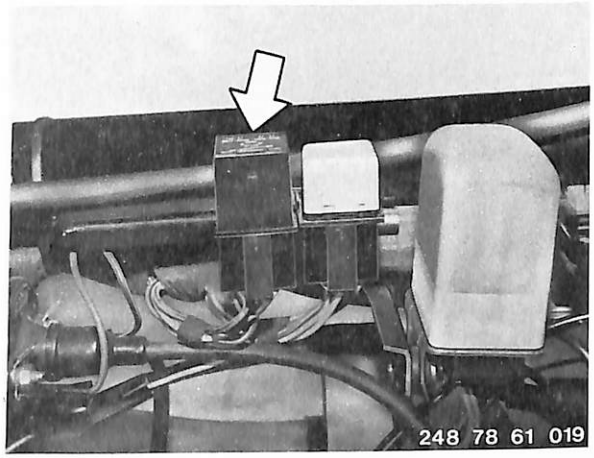

61 33 000 Removing and Installing Horn

Disconnect ground wire from battery. Unscrew horn mounting screw (arrow).

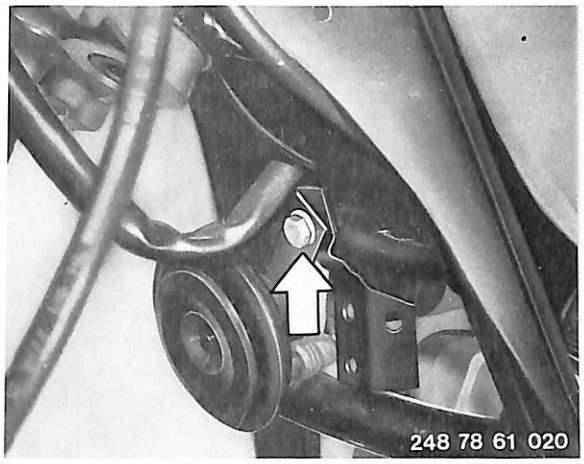

Push back water cap (arrow) and pull off flat male plug.

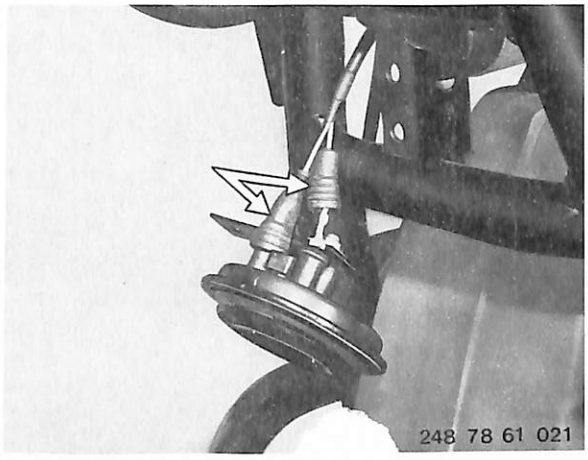

62 Instruments

Specifications . . . . . Page 62– 0/3
Specifications – 1981 models 62– 0/5
62 12 000 Speedometer – remove and install 62–12/1
62 12 020 Speedometer drive cable – remove and install 62–12/2
62 13 000 Tachometer – remove and install 62–13/1

Instruments

Specifications

Model	R 65
Constant W for mile gage	1.267
Gage range in mph	0 . . . 120
Tachometer rpm	0 . . . 8500

Specifications 1981 Models

Model	R 65	R 65 LS
Constant W for km speedometer	0.819	
Constant W for mile speedometer	1.381	
Gauge range in km/h	10 . . . 200	
Gauge range in mph	0 . . . 85	
Tachometer range in rpm	0 . . . 8500	

62 12 000 Removing and Installing Speedometer

Remove and install cockpit upper section (only R 65 LS) 46 63 025.

Unscrew two phillips screws of instrument trim panel.
Unscrew round nut of ignition lock with special pliers.
Pull turn signal bulb holders out of trim panel. Take off instrument trim panel.

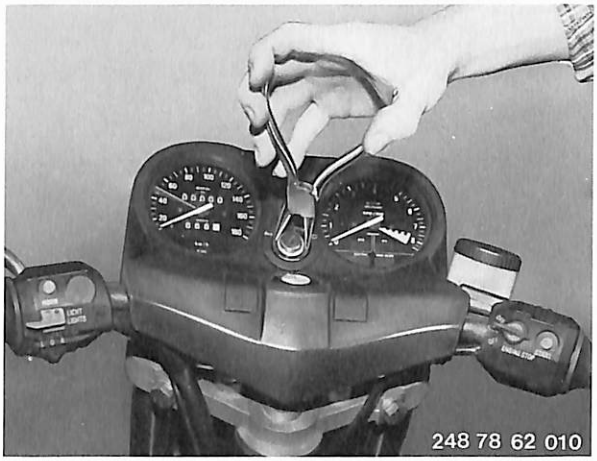

Detach speedometer cable (1) from instrument and pull out holder (2) for instrument light.

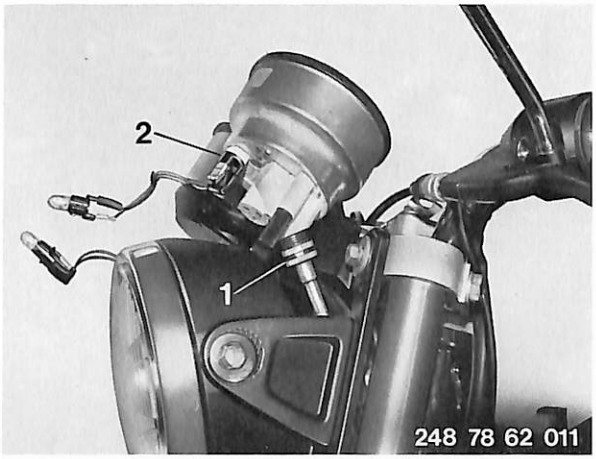

Unscrew two instrument mounting nuts (arrows) and remove instrument.

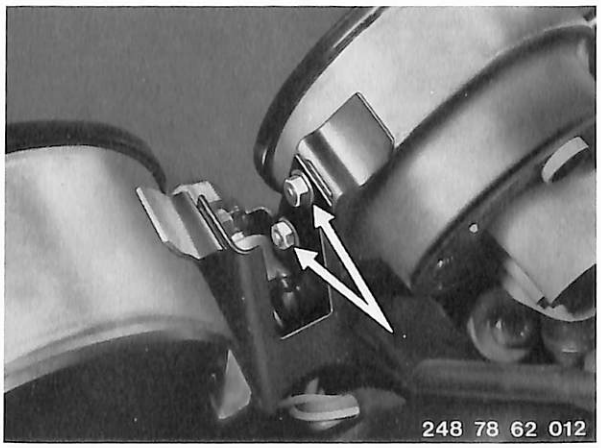

62 12 020 Removing and Installing Speedometer Drive Cable

Remove and install cockpit upper section (only R 65 LS) 46 63 025.
Unscrew knurled nut (arrow) on speedometer.

■

Push back rubber cap for speedometer drive on transmission. Unscrew mounting screw (arrow) far enough that the speedometer drive cable can be pulled out.

Installation:
Make sure speedometer drive cable is routed correctly along the frame.

■

62 13 000 Removing and Installing Tachometer

Remove and install cockpit upper section (only R 65 LS) 46 63 025.
Unscrew two phillips screws of instrument trim panel.
Unscrew round nut of ignition lock with special pliers.
Pull out holders for turn signal light bulbs.
Take off instrument trim panel.

Pull out multiple plug from instrument.

Installation Note! Watch round head pin when installing!

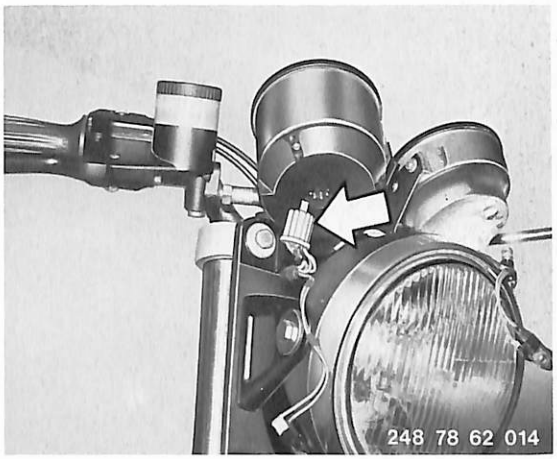

Unscrew two instrument mounting nuts and remove instrument.

63 Lights

Specifications . . . . . Page 63– 0/3
Specifications – 1981 models 63– 0/5
63 10 004 Headlight – aim 63–10/1
63 21 380 Tail light assembly – remove and install 63–10/2
63 23 170 Turn signals, both (front or rear) – remove and install 63–23/1
63 99 241 Light bulb for haedlight – replace 63–99/1
63 99 271 Light bulb for turn signal (front or rear) – replace 63–99/2
63 99 381 Light bulb for tail light – replace 63–99/2

Lights

Specifications

Model	R 65		
Headlight (type)	Bosch Type 0 303 551 103		
High and low beam		12 V / 60/55 W	H-4 halogen lamp
Overnight light	T 8/4	12 V / 4 W	Overnight lamp
Idle indicator lamp (green)	W 10/3	12 V / 3 W	Indicator lamp
Charge indicator lamp (red)	W 5 / 1.2	12 V / 1.2 W	Indicator lamp
Oil pressure indicator lamp (red)	W 5 / 1.2	12 V / 1.2 W	Indicator lamp
High beam indicator lamp (blue)	W 10 / 3	12 V / 3 W	Indicator lamp
Turn signal indicator lamp (green)	W 10 / 3	12 V / 3 W	Indicator lamp
Instrument light	W 10 / 3	12 V / 3 W	Indicator lamp
Tail and license plate light	R 19 / 5	12 V / 5 W	Bulb
Stop light	P 25 / 1	12 V / 21 W	Bulb
Turn signal (2 yellow both front and rear)	P 25 / 1	12 V / 21 W	Bulb

Lights

Specifications 1981 Models

Model	R 65			R 65 LS
Headlight (type)	Bosch Type 0 303 551 103			
High and low beam			12 V / 60/55 W	H-4 halogen lamp
Overnight light	T 8/4		12 V / 4 W	Overnight lamp
Idle indicator lamp (green)	W 10/3		12 V / 3 W	Indicator lamp
Charge indicator lamp (red)	W 5 / 1.2		12 V / 1.2 W	Indicator lamp
Oil pressure indicator lamp (red)	W 5 / 1.2		12 V / 1.2 W	Indicator lamp
High beam indicator lamp (blue)	W 10 / 3		12 V / 3 W	Indicator lamp
Turn signal indicator lamp (green)	W 10 / 3		12 V / 3 W	Indicator lamp
Instrument light	W 10 / 3		12 V / 3 W	Indicator lamp
Tail and license plate light	R 19 / 5		12 V / 5 W	Bulb
Stop light	P 25 / 1		12 V / 21 W	Bulb
Turn signal (2 yellow both front and rear)	P 25 / 1		12 V / 21 W	Bulb

63 10 004 Aiming Headlight Beam

Always check aiming of headlight beam after working on headlight. If an aimer is not available, this can be done as described below. Check and, if necessary, correct tire pressures.

Park motorcycle on its wheels on a level surface 5 meters (16.4 feet) away from a light-colored wall and have rider sit in saddle. The rear spring struts are adjusted for solo riding. Measure distance from floor to center of headlight, transfer this height to wall, make a cross mark and draw a second cross mark 5 cm (1.968") below first mark. Turn on low beam headlight and align headlight beam, that it's light/dark line runs left from height of lower cross, rising from center of cross to the right up to height of upper cross and then drops again.

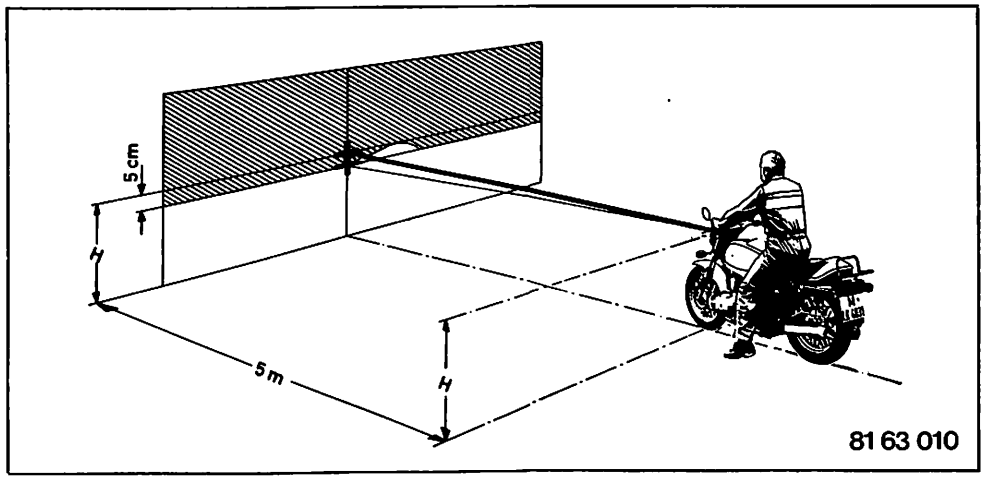

63 21 380 Removing and Installing Combination Tail Light Assembly

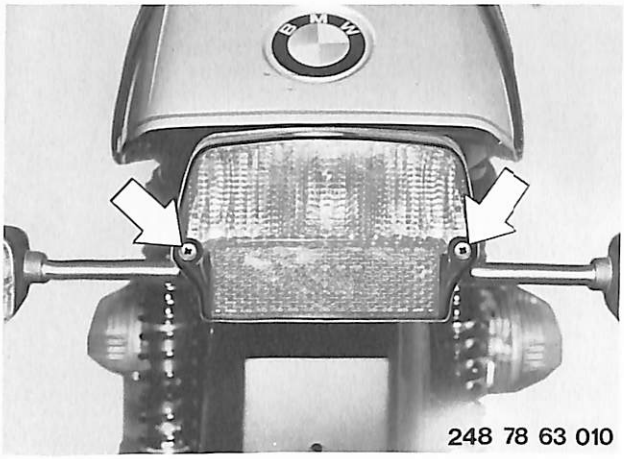

Disconnect ground wire from battery.
Unscrew both phillips screws and remove lens.

■

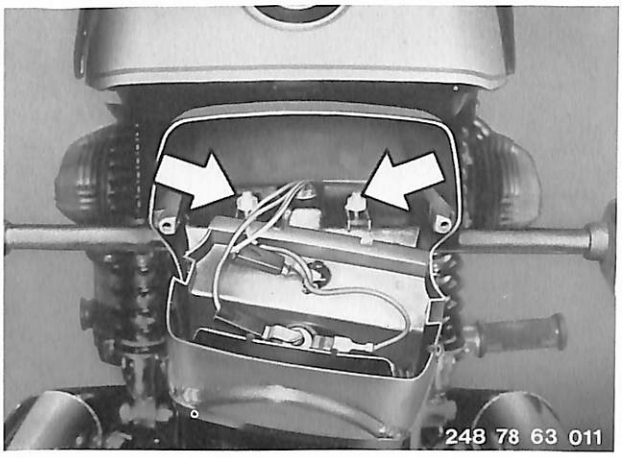

Pull off wires from back of reflector, noting connections if necessary.

Unscrew mounting screws with washers and nuts from housing and remove housing.

Installation Note! When installing lens, make sure that clear glass for license plate light is at bottom.

■

63 23 170 Removing and Installing Both Turn Signals (Front or Rear)

Disconnect ground wire from battery.
Unscrew both phillips screws and remove lens.

Installation Note! When installing lens, make sure that „top" is up.

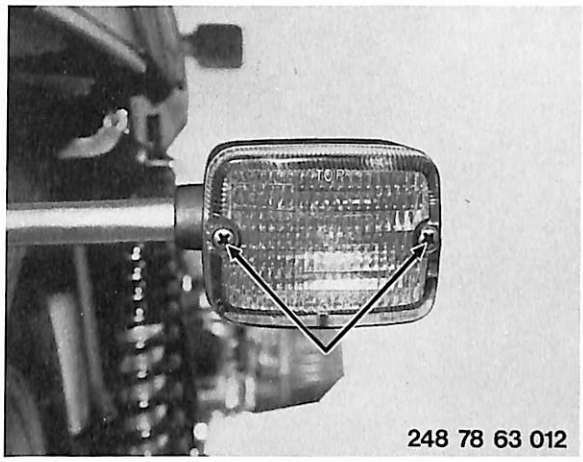

248 78 63 012

Disconnect wires from back of holder.

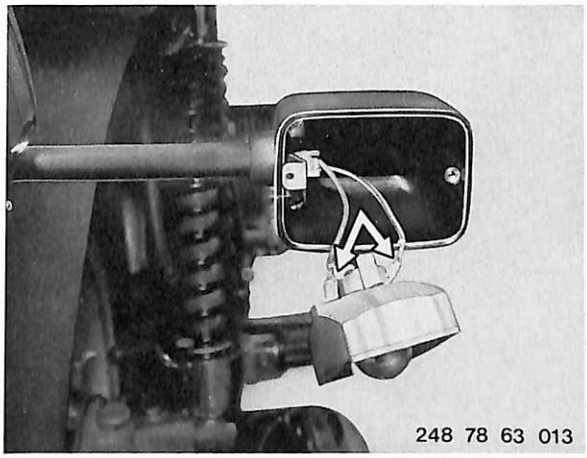
248 78 63 013

Loosen both screws and take off turn signal housing.

248 78 63 014

63 99 241 Replacing Light Bulb for Headlight

Remove and install cockpit upper section (only R 65 LS) 46 63 020.
Loosen phillips screw (arrow) in headlight face ring at bottom and pull face ring off of headlight housing.

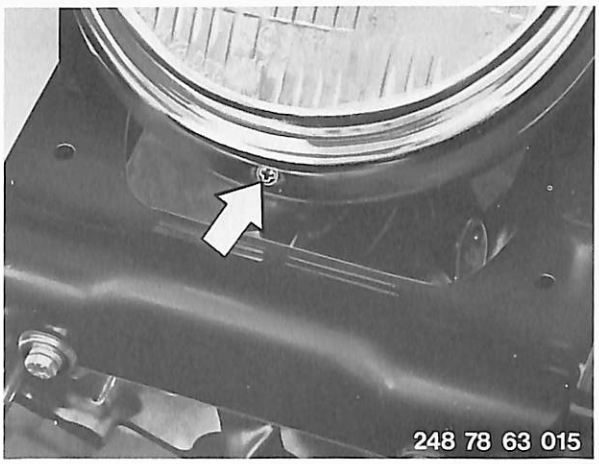

Open wire holder, detach halogene lamp from reflector and pull out from push button plug.

Installation Note! When installing halogen lamp, make sure that turning catch engages in reflector.
Never touch halogene lamp with bare fingers!
Pull out overnight lamp holder from reflector.

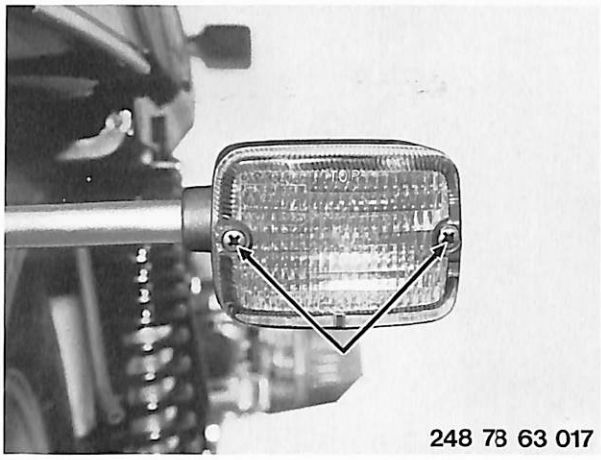

63 99 271 Replacing Bulb of One Turn Signal (Front or Rear)

Disconnect ground wire from battery.
Unscrew both phillips screws and remove lens.

■

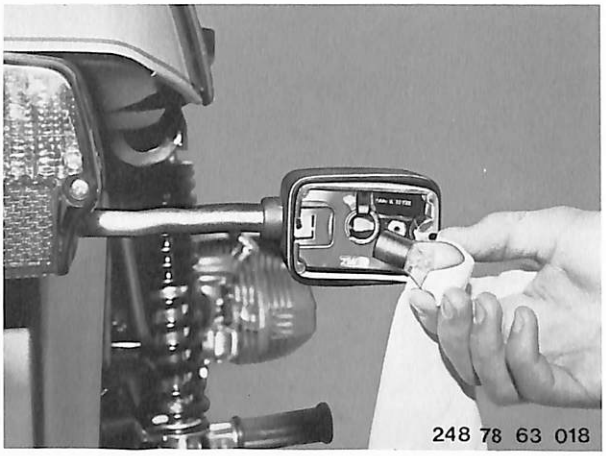

Press bulb into holder and turn anticlockwise to remove.

Installation Note! When installing lens, make sure that „top" is up.

■

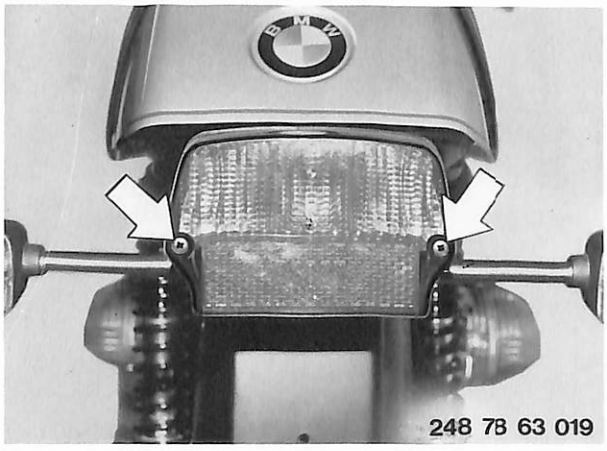

63 99 381 Replacing Bulb for Tail Light

Disconnect ground wire from battery.
Unscrew both phillips screws and remove lens.

■

Press bulb into holder and turn to remove.

■