BMW K1

Extract of the repair manual K1

BMW Motorrad GmbH + Co.
Service Department

1. COMPLETING THE MOTORCYCLE AND PRE-DELIVERY CHECK

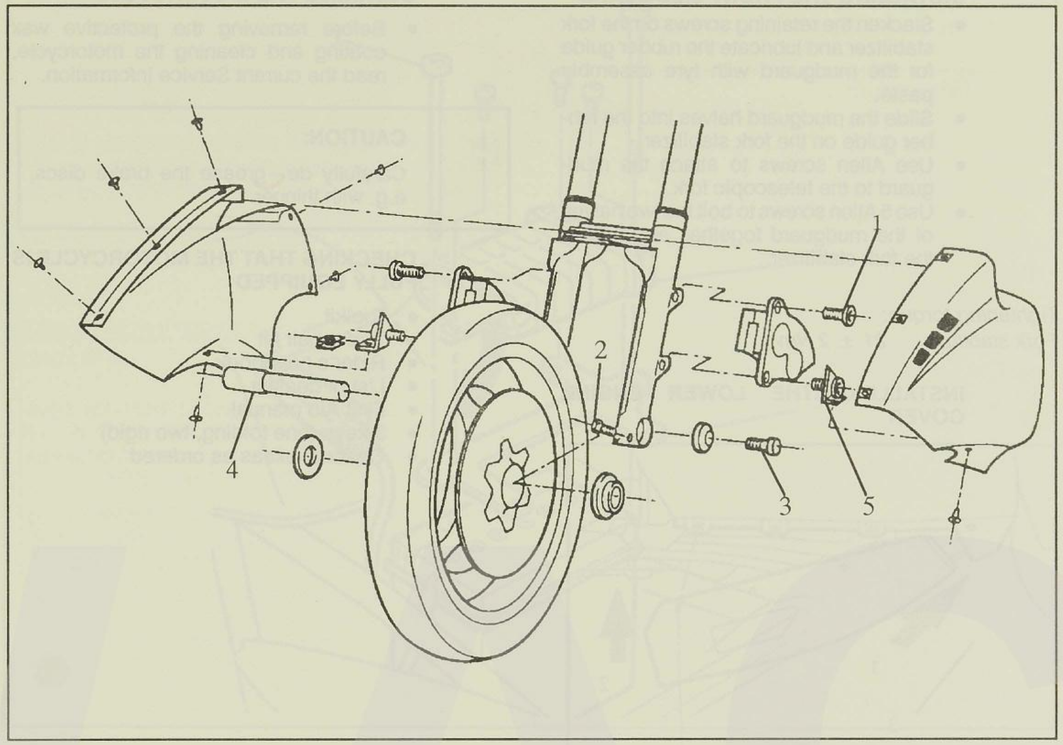

1.1 COMPLETING THE MOTORCYCLE

INSTALLING THE FRONT WHEEL

- Slacken the retaining straps.
- Lift the motorcycle with suitable hoisting gear and unfasten the straps.
- Unfasten the retaining screws (1) for the brake calipers and let them hang freely.
- Slacken the screw clamps at the left and right of the front axle.
- Slacken off the machine screw from the quick–release axle and pull out the axle.
- Lower the motorcycle until there is no need to lift the front wheel to install it.
- Assemble the quick–release axle from the right–hand side.
- Remember to include the shim washers at left and right.
- Insert the machine screw, with spacer, into the quick–release axle.
- For the time being, tighten the clamp screws on the left side only.

Tightening torques:

Machine screw	*33 ± 4 Nm*
Screw clamps	*14 ± 2 Nm*

- Press the brake pads apart.
- Carefully push the brake caliper over brake disc.

> **CAUTION:**
>
> Mask the inside of the brake caliper, e.g. with insulating tape, otherwise it may damage the wheel rim.

- Insert the retaining screws (1), with holder (5) underneath.

Tightening torque:

Machine screw	*32 ± 2 Nm*

- Move the motorcycle off the pallet and compress the telescopic fork several times.
- Tighten the screw clamps on the right–hand side.

INSTALLING THE FRONT MUDGUARD

- Slacken the retaining screws on the fork stabilizer and lubricate the rubber guide for the mudguard with tyre assembly paste.
- Slide the mudguard halves into the rubber guide on the fork stabilizer.
- Use Allen screws to attach the mudguard to the telescopic fork.
- Use 5 Allen screws to bolt the two halves of the mudguard together, and tighten the fork stabilizer.

Tightening torque:
Fork stabilizer 21 ± 2 Nm

INSTALLING THE LOWER ENGINE COVER

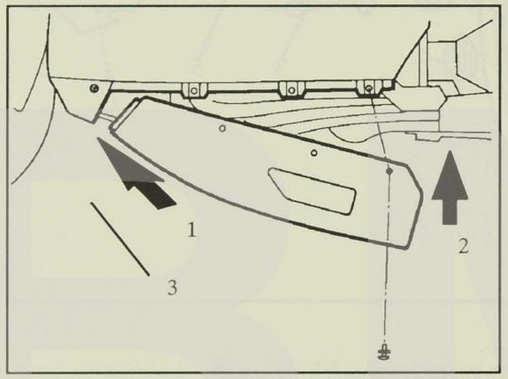

- Insert the engine cover in the fairing, and screw it tight.

> **NOTE:**
>
> Insert the Phillips–head screws at left and right, starting from the back.

CLEANING THE MOTORCYCLE

- Before removing the protective wax coating and cleaning the motorcycle, read the current Service Information.

> **CAUTION:**
>
> Carefully de–grease the brake discs, e.g. with thinner.

CHECKING THAT THE MOTORCYCLE IS FULLY EQUIPPED

- Toolkit
- Tyre repair kit
- Rider's handbook
- List of dealers
- First Aid manual
- 3 keys (one folding, two rigid)
- Optional extras as ordered

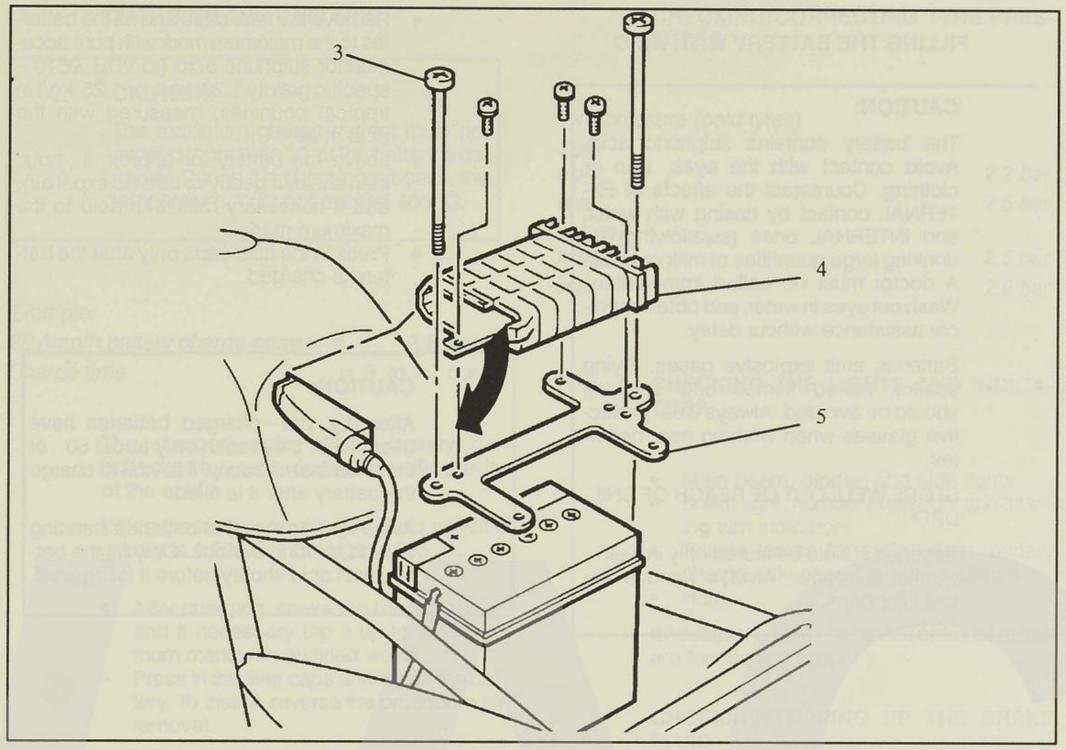

1.2 PRE–DELIVERY CHECK

> **NOTE:**
>
> The pre–delivery check must be conducted immediately before the motorcycle is handed over.

REMOVING THE BATTERY

- Open the lid on the left storage compartment. Unlock and remove the dualseat.

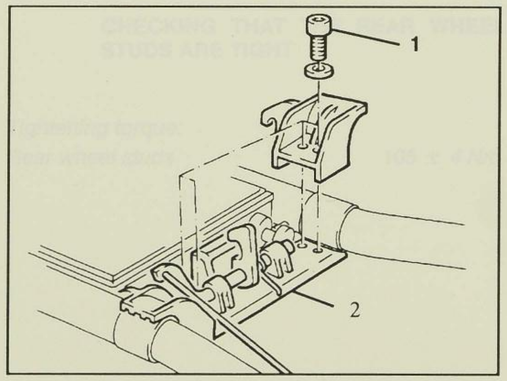

- Unfasten the retaining screws (1).
- Take off the holder for the dualseat lock.
- Unlock the fuse on the control unit plug, and pull the plug on the cable input side out of the control unit (arrow).
- Unfasten the retaining screws (3) and lift out the control unit (4) and retaining bracket (5).
- First disconnect the negative lead, then the positive lead. Pull the ventilation tube out of the mudguard. (When installing, connect the positive lead first).
- Lift out the battery.

FILLING THE BATTERY WITH ACID

CAUTION:

The battery contains sulphuric acid. Avoid contact with the eyes, skin or clothing. Counteract the effects of EXTERNAL contact by rinsing with water, and INTERNAL ones (swallowing) by drinking large quantities of milk or water. A doctor must be called immediately. Wash out eyes in water, and obtain medical assistance without delay.

Batteries emit explosive gases. Flying sparks, naked flames and smoking should be avoided. Always wear protective glasses when working near batteries.

STORE WELL OUT OF REACH OF CHILDREN.

Batteries should be stored only in well–ventilated rooms. Always remove the cell filler caps.

- Remove the filler caps and fill the batteries to the maximum mark with pure accumulator sulphuric acid (to VDE 0510 – specific gravity 1.28 kg/l, or 1.25 kg/l in tropical countries, measured with the acid at 20 °C).
- Leave the battery for approx. 1 hour, then shake it gently or tilt it (to expel air), and if necessary refill with acid to the maximum mark.
- Press in the filler caps only after the battery is charged.

CAUTION:

After dry, pre–charged batteries have been filled, they reach only about 60 of their nominal capacity. It is vital to charge the battery after it is filled.

Avoid leaving the filled batteries standing around for long periods. Only fill the battery with acid shortly before it is required.

CHARGING THE BATTERY

CAUTION:

The maximum charge current must not exceed more than 10 of the battery's capacity. During the charging process, the temperature must not exceed 40o C.

Example:

25 Amp/h battery charge current =	*2.5 Amps*
Charge time	*= 5 to 10 hours*

The charged state of the battery can bchecked by measuring the specific gravity of the acid.

When the battery is charged, acid specific gravity is 1.256 to 1.30 kg/l at 205 C.

- After charging, shake the battery gently, and if necessary top it up to the maximum mark with distilled water.
- Press in the filler caps and install the battery. To install, reverse the procedure for removal.

CAUTION:

First connect up the positive pole, then the negative one.

NOTE:

Ensure that the ventilation tube is correctly positioned.

CHECKING THE REAR WHEEL STUDS ARE TIGHT

Tightening torque:

Rear wheel studs	*105 ± 4 Nm*

CHECKING/CORRECTING TYRE PRESSURES

Tyre pressure (cold tyres)

Solo	
front	*2.2 bar*
rear	*2.5 bar*
Pillion	
front	*2.5 bar*
rear	*2.9 bar*

CHECKING THE LIGHTS AND INDICATORS

- Main beam, dipped and side lights
- Brake light, number plate light and flashing turn indicators
- Telltale lamps for main beam, battery charge, idle speed and oil pressure
- Horn

If necessary, also check that optional extras are functioning properly.

CHECKING/TOPPING UP THE BRAKE FLUID

WARNING:

Brake fluid is corrosive. Avoid contact with the eyes, skin and clothing.

CAUTION:

The fluid level at the rear brake must be just below the maximum mark; it must never fall below the minimum mark.

2. MAINTENANCE AND INSPECTION

Driveline

	I	II	III		
Driveline	First BMW Inspection after 1000 km	BMW Servive after first 7 500 km and subsequently every 15000 km	BMW Servive after first 15 000 km and subsequently every 15 000 km	Technical Data	Page
Change oil when warm, renew oil filter element	X	X 1)	X 1)	3,75 l	2.6
Change oil (when warm) in gearbox and final drive	X	–	X 2)	0,85 0,26	2.6/7
Clean inductive sensor on rear wheel	X	–	X	2,5 Nm	2.7
Check spark plug electrode gap	–	X	–	0,6 – 0,7 mm max 0,9 mm	
Renew spark plugs	–	–	X	20 + 2 Nm	2.7
Grease clutch cable nipples at top and bottom	–	X	X		2.7
Check clutch play, adjust if necessary	X	–	X	A = 4 + 0,5 mm B = 75 + 1mm	2.7/8
Check valve clearances, adjust if necessary	X	–	every 30 000 km	E 0,15 – 0,20 A 0,25 – 0,30	2.8
Renew intake air cleaner	–	–	X 3)		2.12
Check throttle cable play and adjust if necessary	X	–	X	1 mm	2.13
Check idle speed setting and CO value, adjust if necessary	X	X	X	950 ± 50 rev/min 1,5 ± 0,5 %	2.13

Recommendation: in severe operating conditions, grease the twistgrip and steering head bearings at least every 3,000 km *)

*) Charged additionally

1) At least every 6 months, or every 3 months if the motorcycle is used only for short journeys or the outside temperature is less than 05 C; every 3,000 km at the latest.

2) At least once a year.

3) Renew the intake air cleaner every 7,500 km if it gets very dirty, or more often if necessary.

4) As a rule, every 30,000 km, but every 15,000 km if fuel quality is poor.

5) At least every 3 months.

Running gear

	I	II	III		
Driveline	First BMW Inspection after 1000 km	BMW Servive after first 7 500 km and subsequently every 15000 km	BMW Servive after first 15 000 km and subsequently every 15 000 km	Technical Data	Page
Change oil in telescopic fork	X	–	X	Inl. 15 + 2 Nm Dr. 9 + 1 Nm	2.14
Ckeck play at steering head bearings, adjust if necessary	–	–	X *)	Zero clearance	2.15
Renew fuel filter	–	–	X 4)		2.16
Check for brake pad and disc wear, renew if necessary. *)	–	–	X		2.18
Check level of brake fluid at front and rear, top up if necessary. Check for leaks in the brake system and signs of damage. Change the brake fluid at least once a year. *)	X	–	X	DOT 4	2.19
Check the acid level in the battery. If necessary, top up with distilled water. Clean and grease the battery terminals.	–	–	X *)		2.21
Check for leaks at the hose connections in the fuel and cooling systems. Tighten the hose clips.	X	–	X		
Check coolant concentration, top up if necessary	X	–	X	60% water 40% antifreeze: –28 °C	2.21
Change the coolant at least every two years *).	X	–	X *)	50:50: –36 °C	2.21
Check play at swinging arm and final drive, adjust if necessary	–	–	X		2.21
Tighten bolts and nuts	X	–	X		2.21
Final check including road safety and correct operation	X	X	X		2.21

Recommendation: in severe operating conditions, grease the twistgrip and steering head bearings at least every 3,000 km *)

*) Charged additionally

1) At least every 6 months, or every 3 months if the motorcycle is used only for short journeys or the outside temperature is less than 05 C; every 3,000 km at the latest.

2) At least once a year.

3) Renew the intake air cleaner every 7,500 km if it gets very dirty, or more often if necessary.

4) As a rule, every 30,000 km, but every 15,000 km if fuel quality is poor.

5) At least every 3 months.

Operating materials, K Models

Application/designation	Typical application	Order number	Quantity
Lubricants			
Staburags NBU 30 PTM High – preformance	Heavy duty splined joins or similar, pressure points on the clutch and cardan shaft	07 55 9 056 992 07 55 9 056 993	75 gr/t ube 400 ml spray
Never-Seeze temperature – resistant-assembly paste	Inner bearing races of swinging arm	18 21 1 337 498	30 gr. tube
Uni Moly C 220 anti – friction coat	Output shaft components K100	11 21 9 056 999	150ml spray
Siliconf grease 300 (heavy) for damping	Fluid block, K 75	07 58 9 058 193	10 gr. tube
Retinax A (taper) roller bearing grease	Wheel bearings steering head bearing	HWB 81 22 9 407 302 HWB 81 22 9 407 303	900 gr. can 150 gr tube
CRC-Spray contact spray	Water displacement and anti-friction protection on plugs, general protection	HWB 81 22 9 400 208	300 ml Spray
Sealants			
3- Bond 1207 B surface sealant	All metal sealing faces		30 ml cartridge
Loctite 574 surface sealant	Metal sealing faces on gearbox and final drive	HWB 81 22 9 407 301	50 ml tube
Adhesives and locking agents			
Loctite 242 screw locking agent,	Damper piston on piston rod (telescopic fork)	07 58 9 056 031	10 ml bottle
Loctite 270 screw locking agent,	Spring strut eye on piston rod	HWB 81 22 9 400 086	10 ml bottle
Loctite 496 cyanacrylate	Trim components and rubber items	16 11 1 235 651	10 ml tube
3-Bond 1110 B joint sealant	Output shaft bearings K 100 models without collar bearings	05 589 056 998	5 gr. tube

Engine oil viscosity chartin relation to outside temperatures

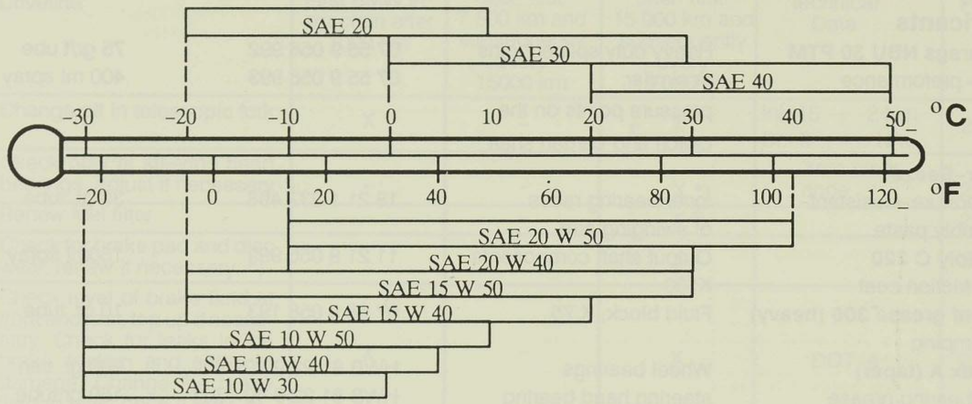

The temperature boundaries of the various SAE categories shown here may be exceeded for brief periods.
Oil to be used:

Brand–name HD oil for spark–ignition engines to API Classification SE/CC or SF/CC.

Ascertaining oil consumption

An oil consumption test can be carried out after the first 7,500 km.
It takes about this long for the oil consumption to stabilize.
There must be no oil leaking from the engine.
Drain off the engine oil when it is at operating temperature.
Renew the filter element.
Fill the engine with fresh oil.
Operate the motorcycle under normal conditions until the oil level has dropped to the bottom mark at the sight glass (the difference between the "MIN" and "MAX" marks is 0.60 l;
if necessary, determine the oil consumption by measuring how much oil is left).
Measurements conducted over relatively short distances are always imprecise, because experience shows that the first half litre is used up more rapidly.
Permissible oil consumption is up to 0.15 litres per 100 km.

Possible causes of higher oil consumption:
1. The motorcycle is not yet run in.
2. The valve guides are not making a proper seal.
3. Brief seizure of a piston as a result of oil shortage.
4. Piston rings installed incorrectly, broken or wrongly positioned in relation to each other.
5. Concentricity error between valve stem and valve too great, defective valve stem seal.

Service data

Designation			Nominal value	Specification	
Oil capacities	Engine with filter	l	3,75	Brand–name HD oil for	
	Engine without filter	l	3,50	spark - ignition engines to API classifications SE, SF, SG; combined with CC or CD specifications.	
	Gearbox	l	0,85	Brand–name oil for hypoid gears, API class GL 5	
	Final drive	l	0,26	Over 55 C: SAE 90 Under 55 C: SAE 80 or optionally SAE 80 W 90	
	Tele. fork, per strut	l	0.400 - 0.01	Esso Comfort	
Coolant		l	2.8 + 1.1 in compensating tank	60% water 40% glycol to -28 °C 50% :50% to -36 ºC	
Valve clearance	Measured at max. temp. of 355 C	mm	E 0.15 - 0.20 A 0.25 - 0.30		
Ignition point	Static setting	Deg. from TDC	6		
	corresponding to	mm from TDC	0.24 at cyl. 1		
Spark plugs			Bosch XR 5 DC Beru 12R - 5 DU		
	Electrode gap	mm	0.6 + 0.1	Wear limit 0.9	
Idle speed setting		rev/min	950 ± 50		
CO value		% by vol	1.5 ± 0.5		
Bowden cable setting for cold-start idle speed increase	Measured at central stop on throttle rail				
	Stage I	mm	1.6		
	Stage II	mm	2.5		
Clutch play	Bowden cable at gearbox	mm	75		
	Bowden cable at lever	mm	4 + 0.5		
Tyre pressures	(when tyres are cold)		Solo	front	2.2 bar
				rear	2.5 bar
			Pillion	front	2.5 bar
				rear	2.9 bar

Tightening torques	**Nm**
Oil filter	Tightened by hand
Engine oil drain screw	20 ± 4
Screw cap on chain case cover	18
Camshaft bearing at cylinder head	9 ± 1
Sprocket at camshaft	54 ± 6
Oil filler/drain screw on gearbox	20 ±3
Oil drain screw at final drive	23 ± 3
Oil filler screw at final drive	23 ± 3
Inductive sensor at final drive	2.5
Cylinder head cover to cylinders	8 ± 1
Spark plugs	20 ± 2
Exhaust manifold at cylinder head	21 ± 2
Oil drain screw at slider tube	3.5 ± 0.5
Oil filler screw in spring bearing	20 ± 2.5
Nut on quick–release axle	33 ± 4
Screw clamps on quick–release axle	14 ± 2
Locking pipe (steering head bearing)	65 ± 5
Locknut (steering head bearing)	65 ± 5
Brake caliper to slider tube	32 ± 2
Retaining studs on rear wheel	105 ± 4

ENGINE OIL CHANGES I, II, III

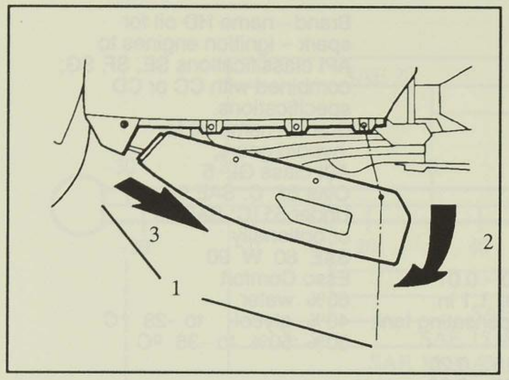

- Unfasten retaining screws (1) on engine fairing and take off the fairing as shown by the arrow.

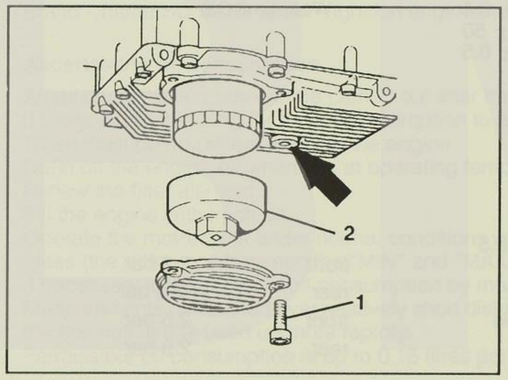

- Unfasten the oil drain screw (arrow) in the oil sump and drain the engine oil when at its operating temperature.
- Renew the sealing ring on the drain screw.
- Unfasten the retaining screws (1) for the oil filter cover.
- Unscrew the filter cover using special BMW wrench 11 4 650 (2) and an open–ended wrench.

NOTE:

Screw in the oil filter element by hand so that it is only just tight.

- If necessary, replace the O–ring in the cover.

Tightening torques:

Oil drain screw	*18 ± 2 Nm*
Cover on oil sump	*6 ± 1 Nm*

Oil content when filter is changed	*3.75 l*
For oil grades, see Service Data page	*2.5*

GEARBOX OIL CHANGES II, III

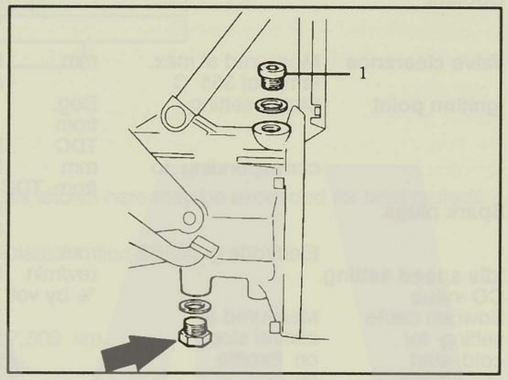

- Unfasten the oil drain screw (arrow) on gearbox and drain off the oil.
- Renew the sealing ring on the oil drain screw.

Tightening torque:

Oil drain screw	*20 ± 3 Nm*

- Unfasten the oil filler screw (1) and pour in the specified amount of oil.
- Renew the sealing ring on the oil filler screw.

Tightening torque:

Oil filler screw	*20 ± 3 Nm*

Oil capacity	*0.85 l*
For oil grades, see Service Data	*page 2.5*

FINAL DRIVE OIL CHANGES I, III

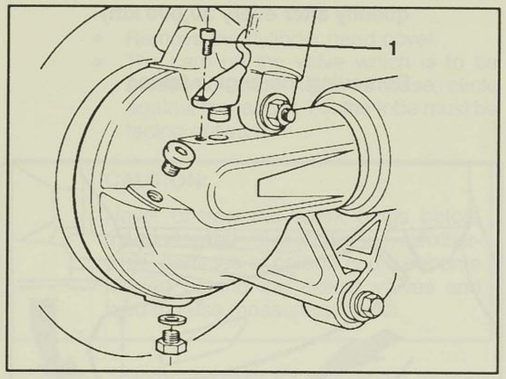

- Unfasten the oil drain screw on the final drive and drain off the oil.
- Renew the sealing ring on the oil drain screw.

Tightening torque:

Oil drain screw	*25 ± 3 Nm*

- Unfasten the oil filler screw and pour in oil to the bottom of the thread in the filler bore.
- Renew the sealing ring on the filler screw.

Tightening torque:

Oil filler screw	*20 ± 2 Nm*

For oil grades, see Service Data page 2.5

CLEANING THE INDUCTIVE SENSOR ON THE FINAL DRIVE I, II

- Unfasten the retaining screw (1) and extract the inductive sensor, if necessary levering it out carefully with a screwdriver.
- Clean the inductive sensor with a soft cloth.

Tightening torque:

Machine screw	*2.5 Nm*

RENEWING THE SPARK PLUGS III

- To ensure perfect ignition, the spark plugs should be renewed after every 15,000 km.

Tightening torque:

Machine screw	*20 ± 2 Nm*

Use approved brand–names only, see Service Data page 2.5

GREASING THE NIPPLES ON THE CLUTCH CABLE II, III

- Disengage the cable at the gearbox release lever and then at hand lever. Grease both nipples (e.g. with Shell Retinax A).

CHECKING CLUTCH PLAY, ADJUSTING IF NECESSARY I, III

- To ensure that the clutch functions perfectly and can be operated correctly, its basic setting must conform with the play at the hand lever.
- To check the basic setting, disengage the clutch cable at the gearbox release lever.

Basic setting:

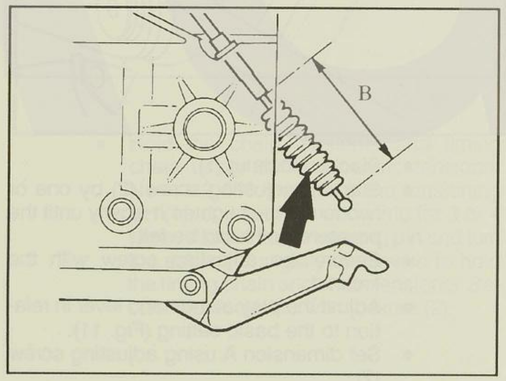

- Pull the rubber grommet (arrow) back slightly, apply BMW gauge No. 21 3 500 and turn the adjusting screw on the clutch lever until the dimension B = 75 + 1 mm is obtained.

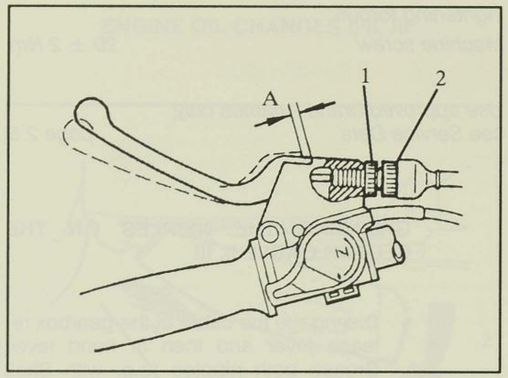

- Slacken milled nut (1) in relation to the adjusting screw on the clutch lever, and twist adjusting screw (2) until dimension B is obtained.
- Re–engage the cable in the release lever.

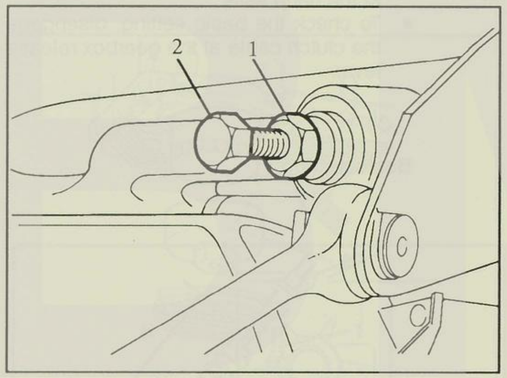

- Slacken locknut (1).
- Slacken adjusting screw (2) by one or two turns, then tighten it slowly until the pressure point can be felt.
- Secure the adjusting screw with the locknut.
- Adjust the play at the hand lever in relation to the basic setting (Fig. 11).
- Set dimension A using adjusting screw (2).
- Lock the adjusting screw by means of the milled nut.

> **CAUTION:**
>
> Adjustments necessitated by wear should be carried out only at the adjusting screw on the release lever.

Note:

Dimension A	*4 ± 0.5 mm*
Dimension B	*75 ± 1,0 mm*

CHECKING VALVE CLEARANCE, ADJUSTING IF NECESSARY I (subsequently after every 30,000 km)

Removing the engine fairing

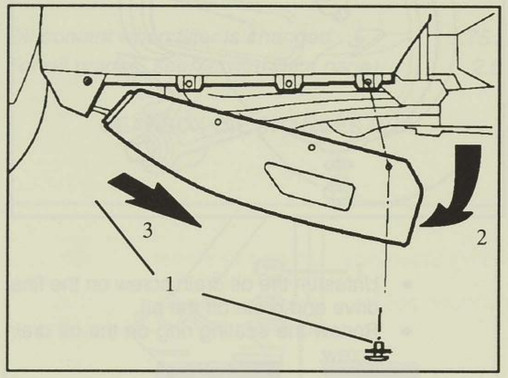

- Unfasten the retaining screws (1) at left and right. Pull down the fairing at the rear, pull it out slightly and remove.

Removing the left fairing section

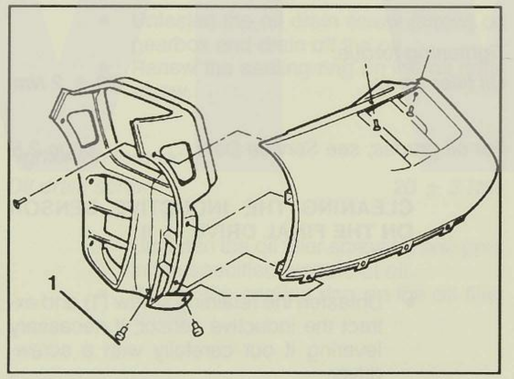

- Unfasten the retaining screws in the radiator fairing, the upper section and at the fairing holder.

Removing the radiator fairing

- Unfasten the retaining screws remaining in the radiator fairing as well as those in the bracket (1) on the engine.

Checking valve clearances

- Remove the cylinder head cover.
- The cam on the valve which is to be measured must have its base circle against the tappet, i.e. the lobe must be facing outward.

> **CAUTION:**
>
> Never unsrew the spark plugs before measuring the valve clearance, as otherwise particles of carbon could become lodged behind the exaust valves and lead to false measuring results.

- Remove cover for Hall–effect transmitter.
- Turn the engine overat the crankshaft (anticlockwise).
- Measure the valve clearance at max. 35o C, using a feeler gauge.

Valve clearances

Intake	*0.15 - 0.20 mm*
Exhaust	*0.23 - 0.30 mm*

Adjusting valve clearances

- To alter the valve clearance, it is necessary to remove the camshafts and change the bucket tappets.
- Set cylinder 1 (timing side) to TDC ignition.
- The BMW adjusting device, No. 11 3 700, must be able to slide into the slot at the end of the shafts.

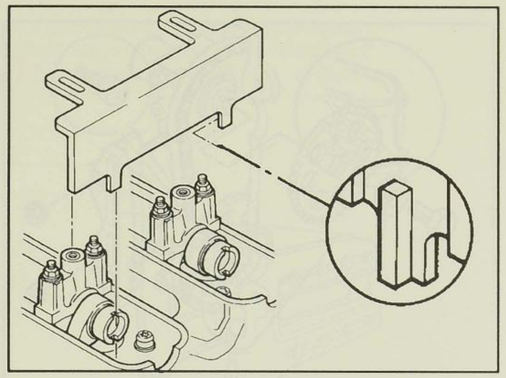

- Remove the screw cap from the chain case cover.

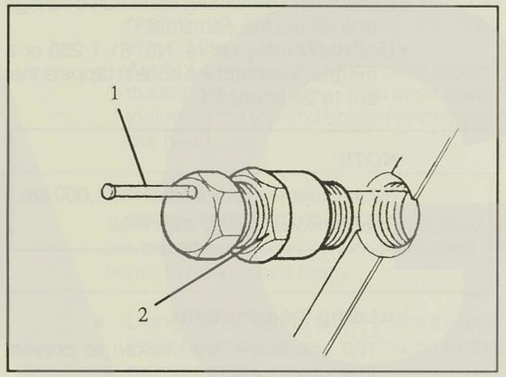

2

- Hold the chain tensioner and timing chain using BMW eccentric tensioner No. 11 2 640: pull back the tensioning pin (1), screw in the eccentric for 3 or 4 turns, slide in the tensioning pin and turn the eccentric slightly clockwise to hold the timing chain and chain tensioner. Secure the eccentric with locknut (2).

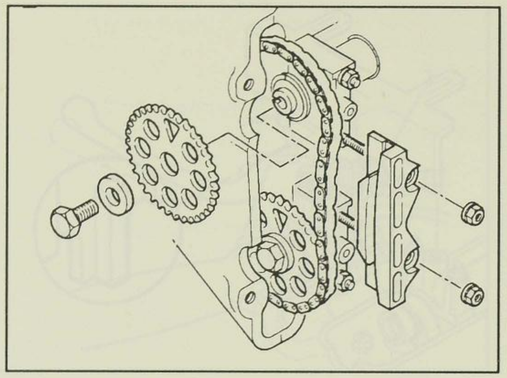

- Unfasten the retaining screws from the sprockets, and remove the sprockets.
- First remove the axial camshaft bearings to prevent it from tipping over.
- Pull the chain guide away from its stud bolts.
- Remove the remaining camshaft bearings and lift out the camshaft.
- Use BMW relay pliers, No. 61 1 250 or a magnet to extract the bucket tappets that are to be changed.

NOTE:

Bucket tappets removed at the 1,000 km inspection may be re–used.

Installing the camshafts

- The camshafts are marked to prevent them from being confused.
  Intake: one groove after the axial bearing
  Exhaust: no groove
- The camshaft bearing caps are also marked.
  Intake: odd numbers
  Exhaust: even numbers
- The sequence is in ascending order starting at the front (timing side) and ascending to the rear.
- Lightly oil the camshafts and install them on the bearing points.
- Starting on the inside, tighten the bearing caps uniformly.
- Initially, secure the axial bearings (timing side) only.

Tightening torque:
Bearing caps *9 ± 1 Nm*

- Turn the camshafts with an open–ended wrench and check the valve clearance.

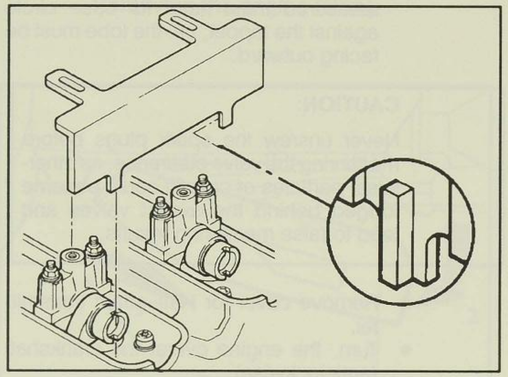

- Turn the camshafts so that the grooves on their end faces are at right angles to the cylinder head.
- The grooves on the front end must point in towards the crankshaft.
- Insert BMW adjusting device, No. 11 3 700, and attach it to the camshaft bearings.

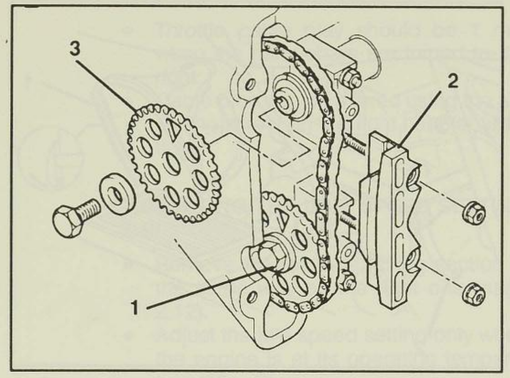

- Install the lower sprocket (1) together with the chain guide (2). The pin on the sprocket must be engage in the groove on the camshaft.
- When installed, the triangle mark on the sprocket must point upward.
- Then install the upper sprocket (3).
- Initially, tighten the sprocket retaining screws by hand.

CAUTION:

Before finally tightening the sprockets, remove the adjusting device, otherwise it may damage the camshafts.

Tightening torque:
Sprocket at camhaft *54 ± 6 Nm*

Installing the cylinder head cover

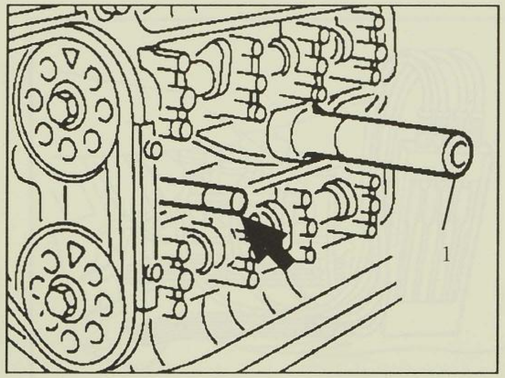

- Insert BMW adaptor screw, No. 11 1 980 (arrow), into the inner front hole.
- Press in BMW centering tool, No. 11 1 990 (1), with BMW handle, No. 00 5 500 into the socket under the third camshaft bearing.

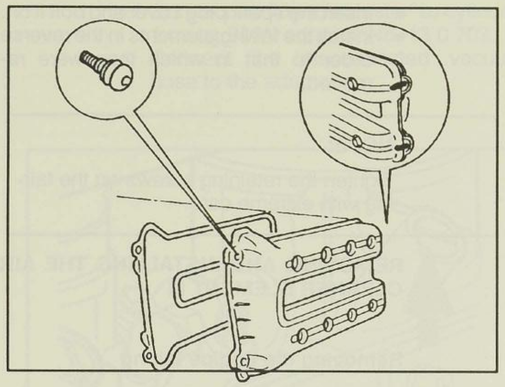

- First insert the cylinder head cover gasket with the crescents; the markings (arrows) at the front and rear of the gasket must agree with those on the cover.
- First press in the crescents at the rear (gearbox side).
- To facilitate assembly, lightly coat the groove on the gasket and the area around the crescents with oil.
- Apply some sealant to the area around the impact strip on the chain case cover, including the top and bottom of the cylinder head.

CAUTION:

Take care when handling solvents, they are dangerous! Comply with the instructions on how to use them.

- Using the centering tools, place the cylinder head cover and gasket on to the cylinder head.
- Loosely tighten all the retaining screws until they are not quite pre–loaded.
- Starting on the inside and working out, tighten all the screws in a cross–wise fashion.
- Remove the adaptor screw and centering tool and insert and tighten the final retaining screw.

Tightening torque:
Cylinder head cover to cylinder head *8 ± 1 Nm*

NOTE:

Take great care when assembling the cylinder head, otherwise leaks may arise.

- Insert the spark plug cover and bolt it on.
- Install the fairing elements in the reverse order to that in which they were removed.

> **NOTE:**
>
> Tighten the retaining screws on the fairing with extreme care.

REMOVING AND INSTALLING THE AIR CLEANER ELEMENT III

Removing the engine fairing

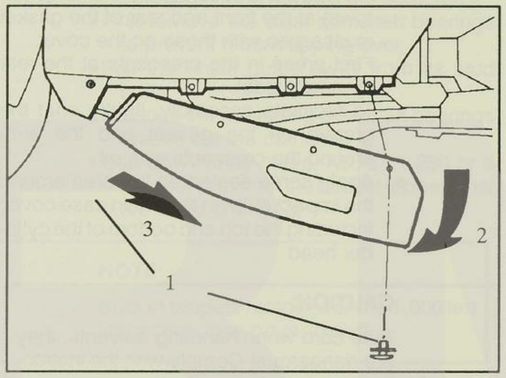

- Unfasten the retaining screws (1) at the left and right. Pull out the fairing at the rear (2), pull it back slightly (3) and remove.

Removing the side fairing component on the right

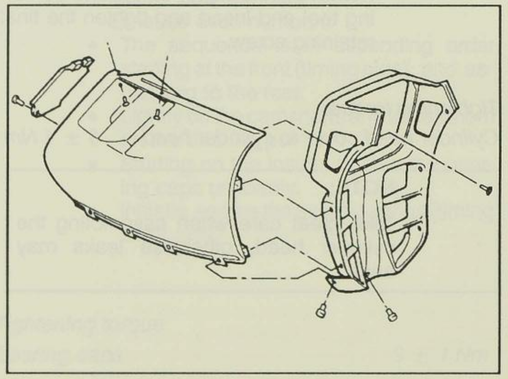

- Unfasten the retaining screws in the radiator fairing, on the upper section and at the fairing holder.

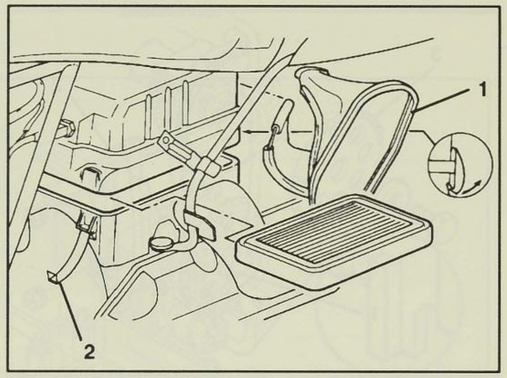

- Pull out the air deflector (1) by twisting it gently.
- Unfasten the clamps (2) on the air cleaner housing (one at the front, two at the rear).
- Lift up the top section of the housing and pull out the air cleaner element.
- Install the air cleaner element and fairing components in the reverse order to that in which they were removed.

> **NOTE:**
>
> Note the installation position of the air cleaner element. The inscription is at the rear (looking in direction of travel) and the arrow mark "TOP – OBEN".

ADJUSTING THE THROTTLE CABLE I, III

- Throttle cable play should be 1 mm when the handlebars are turned to the right.
- Cable play can be altered using the adjusting screw on the right handlebar fitting.

ADJUSTING THE IDLE SPEED SETTING I, III

- Remove the left side fairing section in the same way as the right one (page 2.12).
- Adjust the idle speed setting only when the engine is at its operating temperature (85o C).

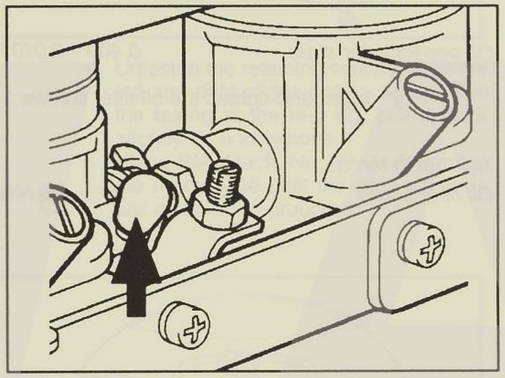

- Pull the stopper (arrow) off the vacuum connections and disconnect the vacuum hose at cylinder 1.

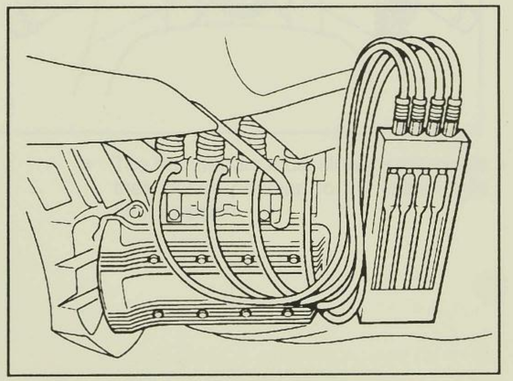

- Connect BMW "Synchrotester", No. 13 0 700, with adaptors, No. 13 0 702, to cylinders 2, 3 and 4.
- Connect the "Synchrotester" to cylinder 1 using BMW adaptor, No. 13 0 703.
- Connect the disconnected vacuum hose to the adaptor.

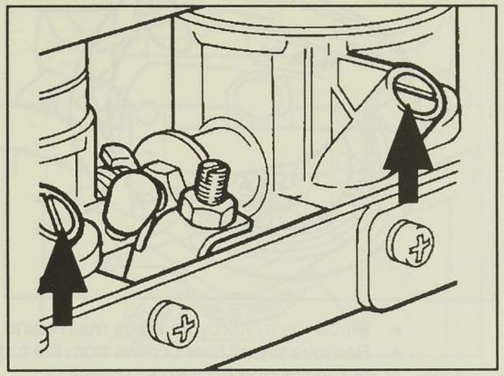

- Turn the various recirculating air screws (arrows) until uniform firing is achieved at all the cylinders, i.e. the four mercury columns must be at the same level.
- Turning the various recirculating air screws also regulates the idle speed setting.

Idle speed setting: *950 ± 50 rev/min.*

CHANGING THE OIL IN THE TELESCOPIC FORK I, III

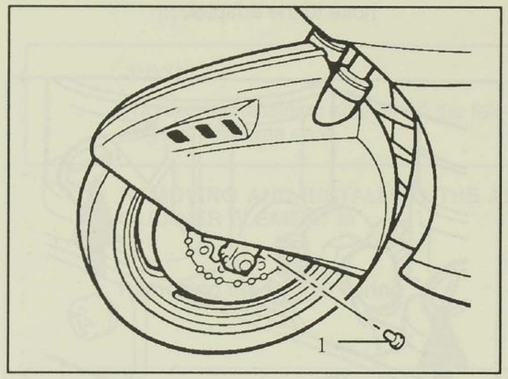

- Place the motorcycle on its main stand.
- Remove the oil filler screws from the top of the left and right spring bearings.
- Remove the oil drain screws (1) from the fork slider tube and drain the oil from the fork.
- When oil ceases to drain out, compress the fork several times to expel any oil remaining inside.
- Fit new sealing rings and screw the oil drain plugs back in place.

Tightening torque:
Oil drain screw *3.5 ± 0.5 Nm*

- Remove the engine fairing.

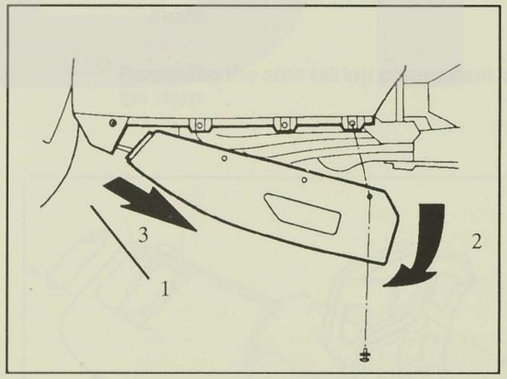

- Unfasten the retaining screws (1) at the left and right. Pull the fairing at the rear (2), pull it back slightly (3) and remove.
- Using BMW jack, No. 00 1 510, raise the motorcycle until the front wheel is just clear of the ground.

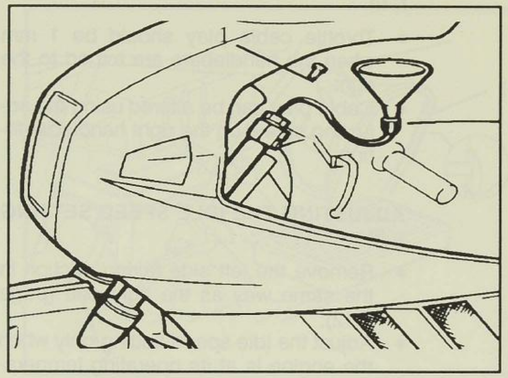

- Use a measuring beaker and funnel (with hose extension) to add oil to the fork.

Oil capacity per strut: *0.400 - 0.010 l*

- Insert and tighten the oil filler screws.

Tightening torque:
Oil filler screw *20 ± 2.5 Nm*

CHECKING STEERING HEAD BEARING PLAY, ADJUSTING IF NECESSARY III

Checking steering head bearing play

- Place the motorcycle on its main stand.
- Remove the engine fairing.

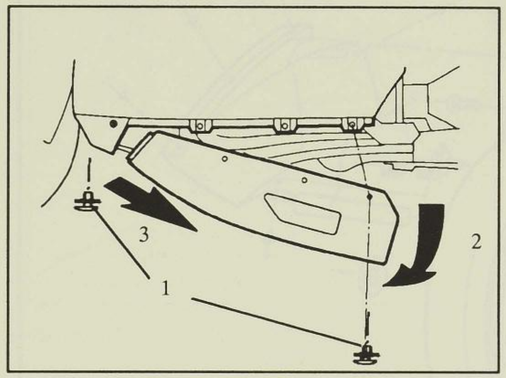

- Unfasten the retaining screws (1) at the left and right of the engine fairing. Pull the fairing at the rear (2), pull it back slightly (3) and remove.
- Using BMW jack, No. 00 1 510, raise the motorcycle until the front wheel is just clear of the ground.

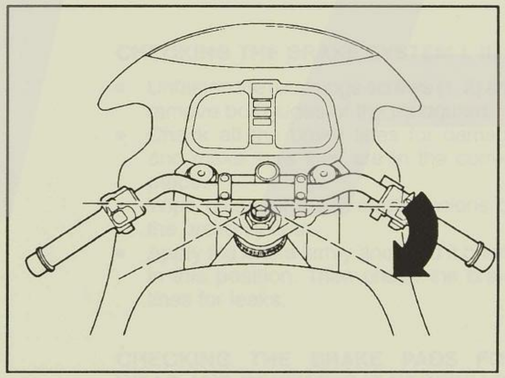

- The handlebars must slowly swing from their centre position to the left or right limit position.

Adjusting the steering head bearing

- Carry out the preliminary work for "Checking steering head bearing play".

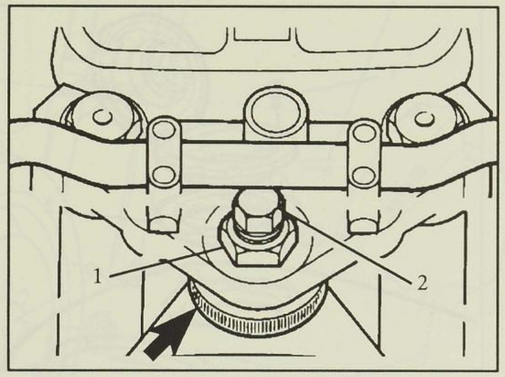

- Slacken the hex nut (1) and locking pipe (2).
- Strike the locking pipe several times with a plastic hammer to relieve the pressure on the bearing.
- Slacken or tighten the round nut (arrow) by hand, depending on how much bearing play has been ascertained.
- Re-tighten the locking pipe and hex nut.

Tightening torques:
Locking pipe *65 ± 5 Nm*
Hex nut *65 ± 5 Nm*

- Check the bearing play at the handlebars once again, and repeat the adjusting procedure if necessary.
- Install the remaining parts by following the removal procedure in reverse order.

RENEWING THE FUEL FILTER III

- Use a hand pump to lower the fuel level until the filter is exposed.

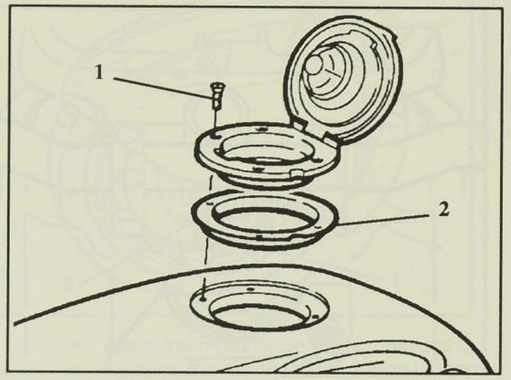

- Open the tank cap and unfasten the retaining screws (1).
- Take off tank cap and gasket (2).

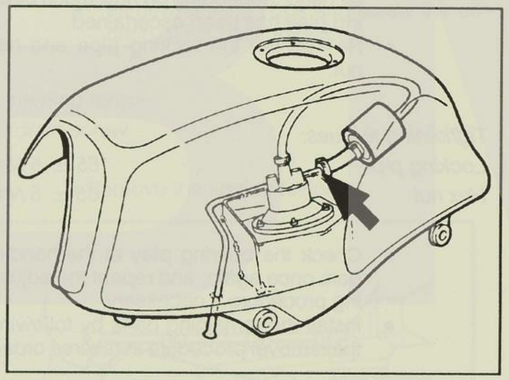

- Slacken the hose clip (arrow) on the pipe side and slide it on to the pipe.
- Pull the hose and fuel filter out of the fuel tank.
- Replace the fuel filter (note its installation position) and re – assemble the fuel lines inside the tank.
- When placing the gasket in the tank cap, do not block the overflow hole.
- Install the tank cap.

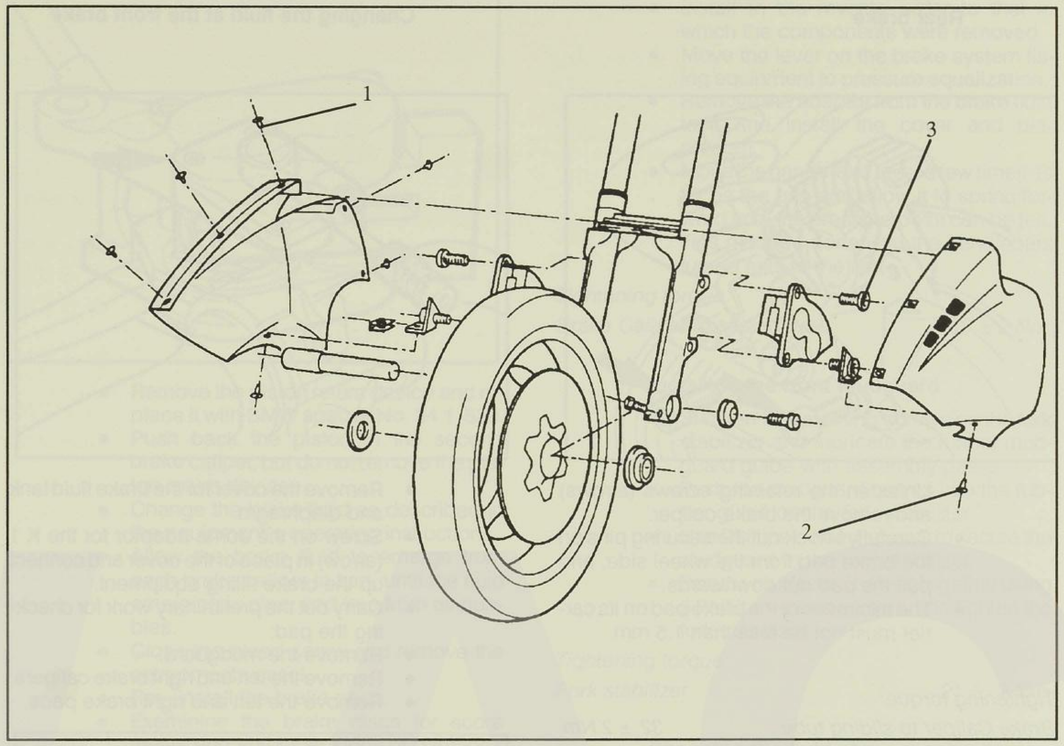

CHECKING THE BRAKE SYSTEM I, III

- Unfasten the retainings screws (1, 2) and remove both sides of the mudguard.
- Check all the brake lines for damage and make sure they are in the correct place.
- Wipe clean all the threaded unions on the brake system.
- Apply the brake firmly and hold it briefly in this position. Then check the brake lines for leaks.

CHECKING THE BRAKE PADS FOR WEAR AND RENEWING IF NECESSARY II, III

Front brake

- Remove the mudguard as described above.
- Unfasten the retaining screws (3) on the left and right brake calipers.
- Mask off the top inside of the brake caliper to prevent the wheel rim from being scratched when it is removed.

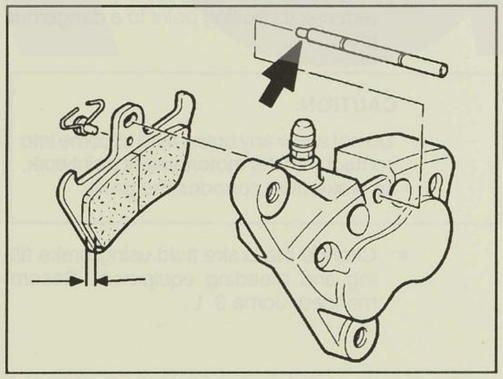

- Extract the securing pin (arrow) from the brake pad and pull the pad out downwards.
- The thickness of the brake pad on its carrier must not be less than 1.5 mm.

Rear brake

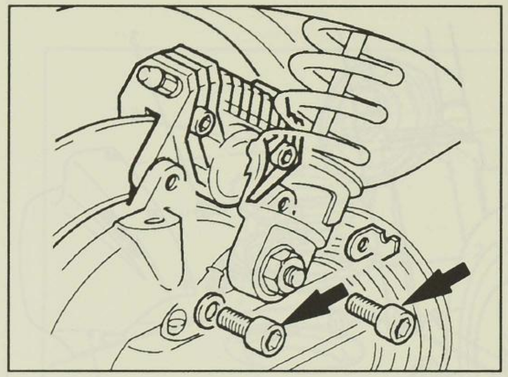

- Unfasten the retaining screws (arrows) and remove the brake caliper.
- Carefully knock out the securing pins on the brake pad from the wheel side, and pull the pad out downwards.
- The thickness of the brake pad on its carrier must not be less than 1.5 mm.

Tightening torque:

Brake Caliper to sliding tube *32 ± 2 Nm*

CHANGING THE BRAKE FLUID I, III

- The brake fluid must be changed once a year. It is subjected to high thermal loads (temperature changes) which accelerate the natural ageing process. Moisture is absorbed from the atmosphere which reduces its boiling point to a dangerous level.

CAUTION:

Do not allow any brake fluid to come into contact with the motorcycle's paintwork, as brake fluid corrodes the paint.

- Change the brake fluid using brake filling and bleeding equipment. Recommended: Joma 3 L.

Changing the fluid at the front brake

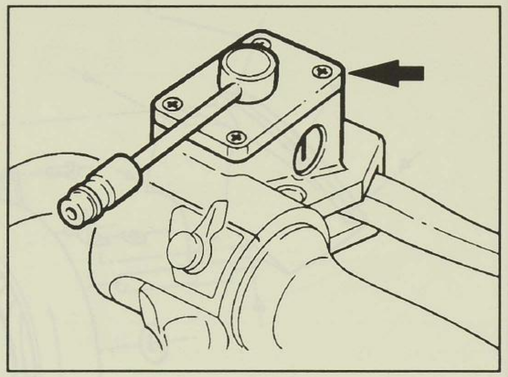

- Remove the cover for the brake fluid tank and diaphragm.
- Screw on the Joma adaptor for the K 1 (arrow) in place of the cover and connect up the brake filling equipment.
- Carry out the preliminary work for checking the pad:
- Remove the mudguard.
- Remove the left and right brake calipers.
- Remove the left and right brake pads.

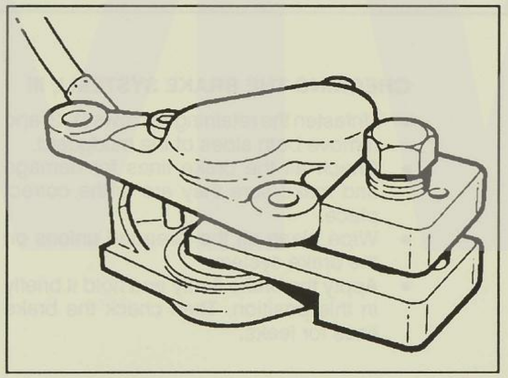

- Connect up a vessel for trapping the escaping brake fluid to the bleed screw on the brake caliper, and give the bleed screw half a turn.
- Use BMW piston return device, No. 34 1 500, to push back the piston.

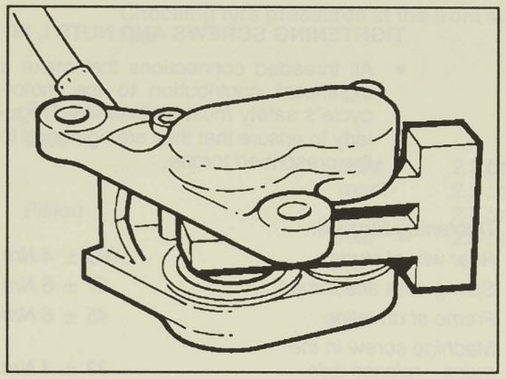

- Remove the piston return device and replace it with BMW spacer, No. 34 1 520.
- Push back the piston in the second brake caliper, but do not remove the piston return device.
- Change the brake fluid as described in the equipment's operating instructions.
- Allow the brake fluid to emerge from each brake caliper in turn, until the fluid emerging is clear and free from air bubbles.
- Close the bleed screw and remove the entrapment vessel.
- Re – install the brake pads.
- Examinine the brake discs for score marks and any other signs of damage.
- If score marks or other damage (cracks) can be seen and felt, renew the brake discs.

Minimum thickness of brake discs: *4.5 mm*

- For installing and removing the brake discs, see Chapter 4.

- Install in the reverse order to that in which the components were removed.
- Move the lever on the brake system filling equipment to pressure equalization.
- Remove the adaptor from the brake fluid tank and install the cover and diaphragm.
- Move the handbrake lever a few times as far as the grip and allow it to spring forward until the pressure point can be felt. This must be done with the handlebars turned fully to the left.

Tightening torque:

Brake Caliper to sliding tube *32 ± 2 Nm*

Installing the front mudguard

- Slacken the retaining screws on the fork stabilizer and lubricate the rubber mudguard guide with assembly paste.
- Push the mudguard halves into the rubber guide on the fork stabilizer.
- Use Phillips – head screws to secure the mudguard to the fork stabilizer.
- Bolt the mudguard halves together using 5 Phillips – head screws, and tighten the fork stabilizer.

Tightening torque:

Fork stabilizer *21 ± 2 Nm*

Changing the fluid at the rear brake

- There is no need to remove the rear brake caliper or push back the piston.
- Bolt the Joma adaptor on to the rear brake fluid tank.
- The further procedure for changing the brake fluid is the same as that for the front brake.

CHECKING ACID LEVEL IN THE BATTERY III

- Check the acid level in the battery visually, and top up with distilled water to the "MAX" mark if necessary. Check the charge level with the "acid extractor". Coat the battery terminals with acid – resistant grease (e.g. Bosch FT 40 V1).

CHECKING COOLANT CONCENTRATION, ADDING MORE COOLANT IF NECESSARY III

- Use an appropriate measuring device (e.g. Glycomat) to extract coolant from the compensating tank. The device indicates the lower limit in oC at which the antifreeze is effective.
  Normal concentration 40:60 effective to -28o C.
  (40 antifreeze, 60 water).
  50:50 in Scandinavian countries.
- Coolant should be added only via the compensating tank, and with the engine cold (ambient temperature).
- When the motorcycle cools down, a vacuum is created in the coolant system, causing coolant to flow from the compensating tank into the radiator.
- The compensating tank must be filled to between the "MIN" and "MAX" marks. Never exceed the "MAX" mark!
- Use only nitride – free antifreeze and corrosion inhibitors.
- Change the coolant at least once every two years.

Filling capacity:	*2.8 l + 1.1*
in the compensating tank.	

CHECKING PLAY AT THE SWINGING ARM AND FINAL DRIVE BEARINGS, ADJUSTING IF NECESSARY III

- Grip the rear wheel by the tyre and attempt to move it to the side, while supporting the motorcycle frame.
- If there is play, determine where it is.
- Release the appropriate free bearing.
- Tighten the bearing journal and locknut to the prescribed torque.

TIGHTENING SCREWS AND NUTS I, III

- All threaded connections that make a significant contribution to the motorcycle's safety must be examined regularly to ensure that they are tightened to the prescribed torque.

Tightening torques:	
Rear wheel studs	*105 ± 4 Nm*
Spring strut attachment	*51 ± 6 Nm*
Frame at driveline	*45 ± 6 Nm*
Machine screw in the quick – release axle	*33 ± 4 Nm*
Screw clamps at the quick – release axle	*14 ± 2 Nm*
Front/rear brake caliper attachment	*32 ± 2 Nm*
Bearing journals (swinging arm floating bearing and final drive bearings)	*7.5 ± 0.5 Nm*
Locknut (swinging arm floating bearing)	*41 ± 3 Nm*
Locknut (final drive)	*105 ± Nm*

FINAL CHECK ON CORRECT OPERATION AND ROAD SAFETY I, II, III

- For the customer's safety and to prevent damage to the motorcycle, a final check should be conducted, if necessary including a test ride.

Checking the lights and signal systems

- Main beam, dipped and side lights
- Brake light, number plate light and flashing turn indicators
- Telltale lamps for main beam, battery charge, idle speed and oil pressure
- Rear light monitor
- Horn
- If necessary, also check that any special equipment (optional extras) is functioning properly.

Functional test

- Check that the clutch, gear selector, steering, foot- and handbrakes work properly, and that the engine's idle speed setting is correct (at its operating temperature).
- Check the engine, gearbox, final drive, brake lines and fuel system for leaks.

Checking tyre pressures at the front and rear

Tyre pressures		
Solo		
	front	*2.2 bar*
	rear	*2.5 bar*
Pillion	*front*	*2.5 bar*
	rear	*2.9 bar*

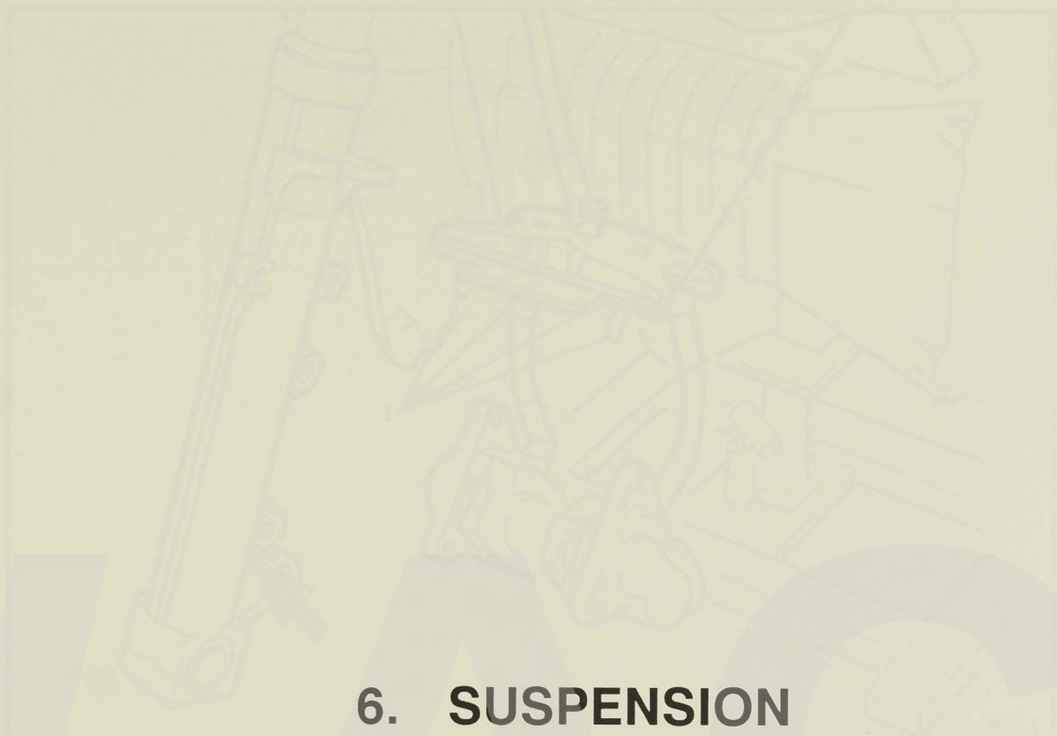

6. SUSPENSION

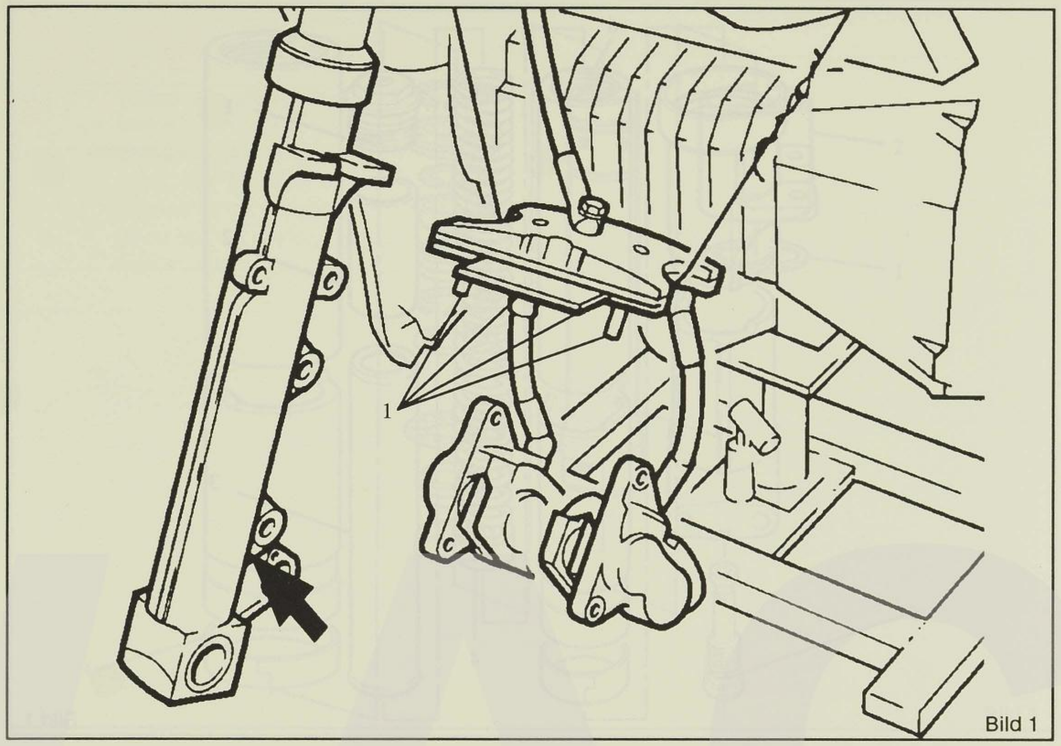

Bild 1

Removing fixed tube with slider tube

- Remove front mudguard.
- Remove front wheel.
- Remove oil drain plug (arrow) and drain off oil.
- Remove retaining screws on either side of fork stabiliser (1) on the sliding tube.
- Secure fork stabiliser together with distributor and brake calipers to frame.
- Release the clamping screws on the upper and lower fork bridge.
- Pull the fork fixed tube and slider tube down to remove and place in the oil collecting tray.
- Remove oil drain plug (arrow) and force out the oil by pushing in the fixed tube several times.

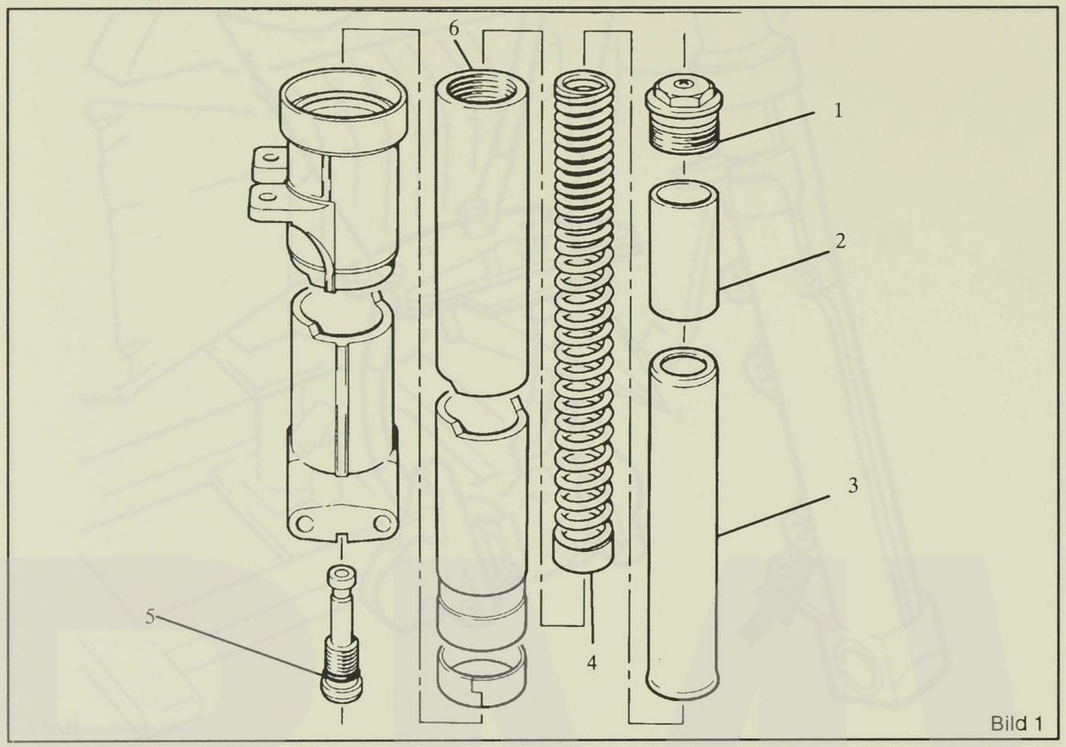

Bild 1

Removing fixed tube

- Clamp the fixed tube in a vise with protective jaws at the brake caliper securing eye.
- Unscrew the top spring cap (1).
- Remove the spacer (2), support tube (3) and coil spring (4).
- Clamp the slider tube horizontally and collect any remaining oil which escapes.
- Remove base valve (5) from slider tube, securing the damper with a triangular scraper if necessary.
- Pull fixed tube (6) out of slider tube using a gentle rotating motion.

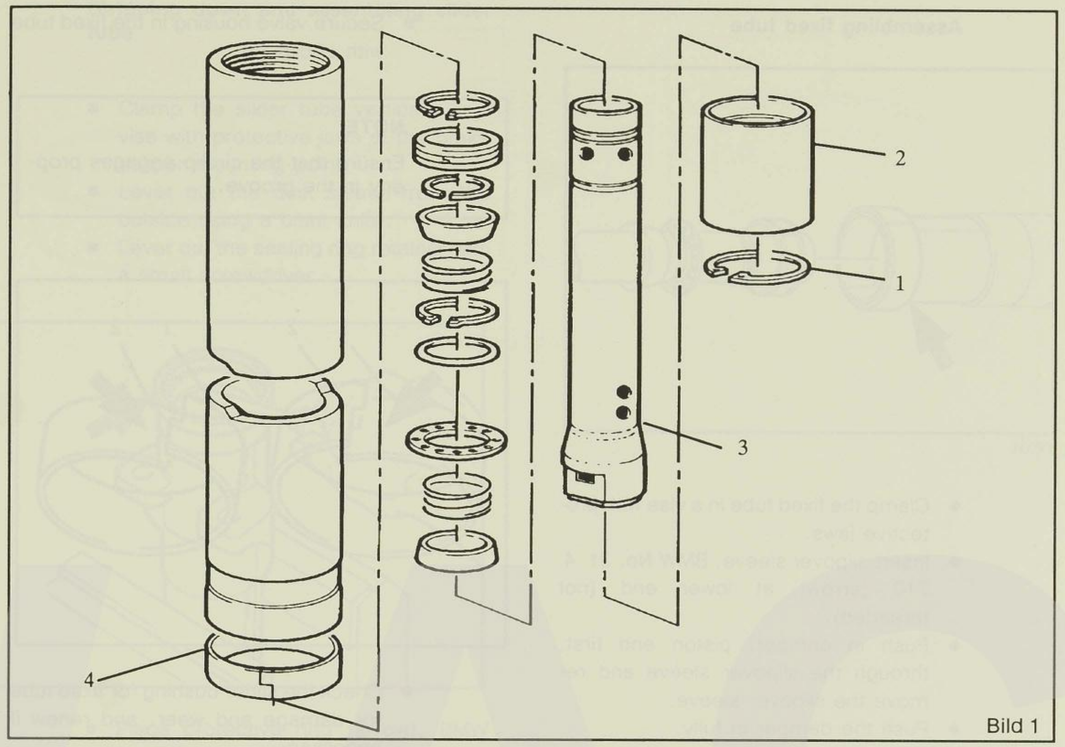

Bild 1

Stripping down fixed tube

- Remove Seeger circlip (1) using Seeger circlip pliers.
- Pull valve housing (2) out of fixed tube.
- Pull out complete damper (3).

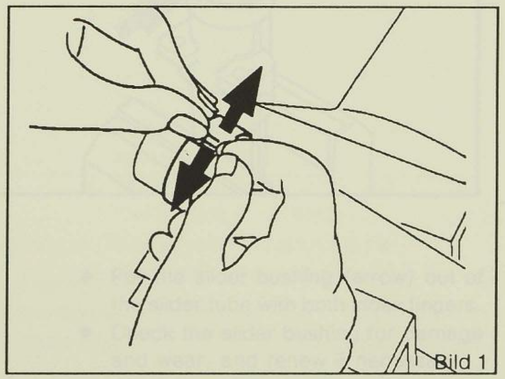
Bild 1

- Press out slider bushing (4) with the thumb and index finger (arrows) and pull off the fixed tube.

Stripping down and assembling the damper

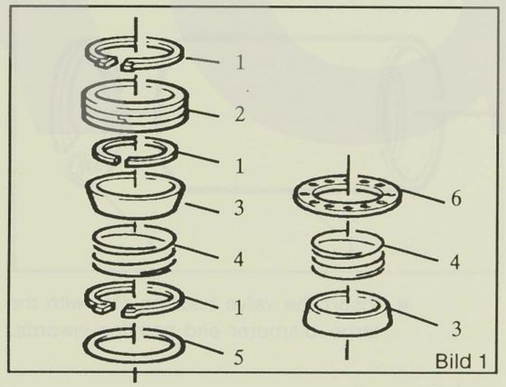

Bild 1

- Remove Seeger circlip (1) using Seeger circlip pliers and pull off the individual parts.
- Individual parts:
  1) Seeger circlip
  2) Piston
  3) Tapered ring
  4) Coil spring
  5) O-ring
  6) Valve washer
- Renew any damaged parts.

Assembling fixed tube

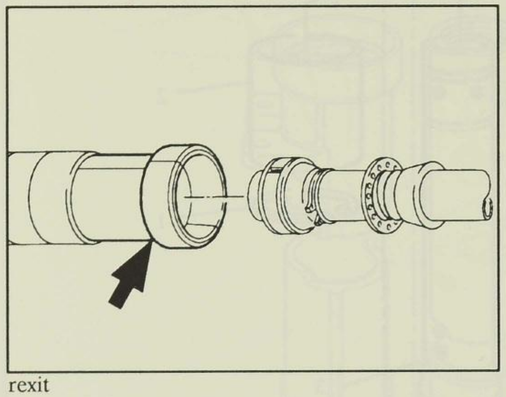

rexit

- Clamp the fixed tube in a vise with protective jaws.
- Insert slipover sleeve, BMW No. 31 4 710 (arrow) at lower end (not threaded).
- Push in damper, piston end first, through the slipover sleeve and remove the slipover sleeve.
- Push the damper in fully.

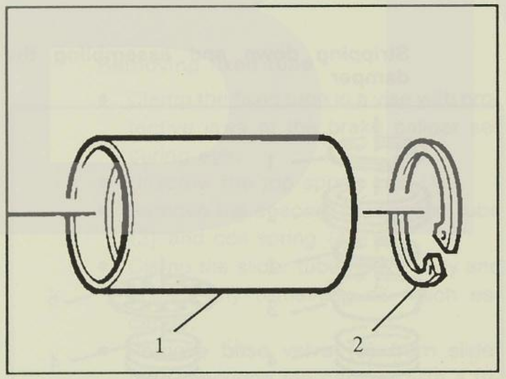

- Insert the valve housing (1), with the large-diameter end pointing inwards.
- Secure valve housing in the fixed tube with circlip (2).

> **NOTE:**
> Ensure that the circlip engages properly in the groove.

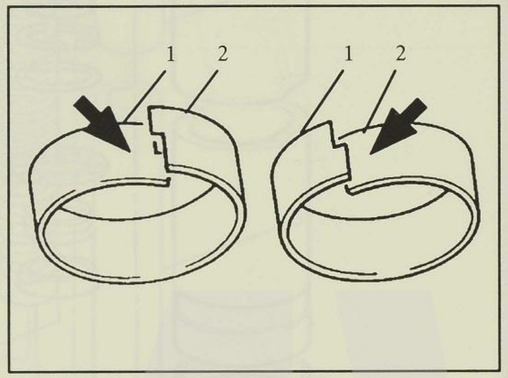

- Check the slider bushing for fixed tube for damage and wear, and renew if necessary.
- Squeeze the slider bushing together slightly before fitting (see illust.) to pre-tension it slightly and ensure that it makes contact all round.

Stripping down and assembling slider tube

- Clamp the slider tube vertically in a vise with protective jaws at the brake caliper mounting point.
- Lever out the dust sleeve from the outside using a blunt knife.
- Lever out the sealing ring retainer with a small screwdriver.

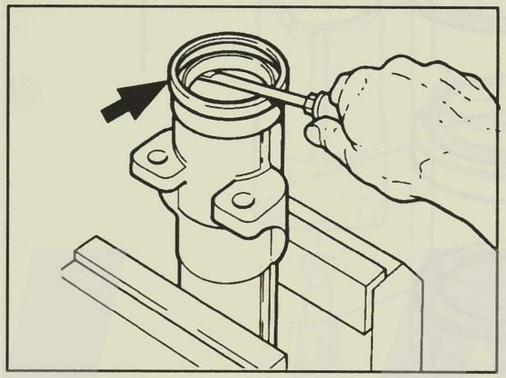

- Place protective ring (arrow), BMW No. 31 3 610, on slider tube.
- Lever out the shaft sealing ring using a screwdriver with rounded-off corners.
- Remove the steel ring.

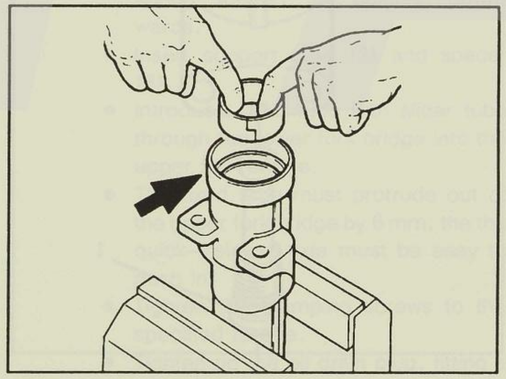

- Pull the slider bushing (arrow) out of the slider tube with both index fingers.
- Check the slider bushing for damage and wear, and renew if necessary.
- Install the slider bushing.

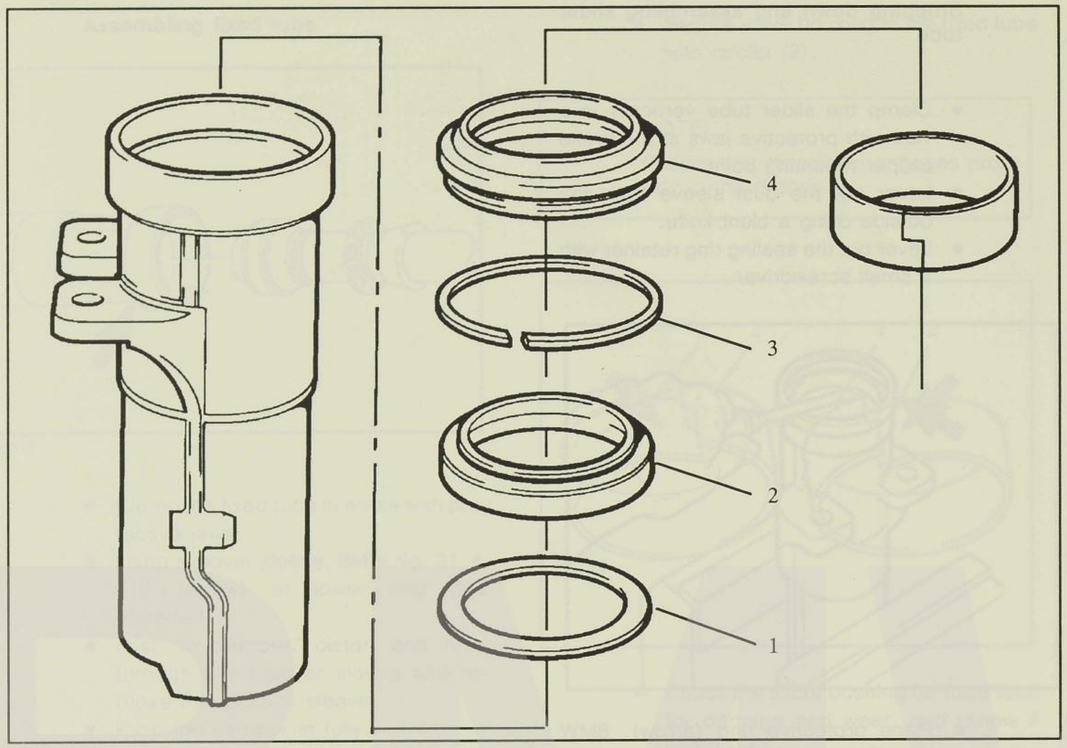

- Insert steel washer (1) in the slider tube.
- Drive in lightly-greased shaft sealing ring (2) with arbor, BMW No. 31 3 600, and handle, BMW No. 00 5 500.
- The annular spring must point upwards.
- Insert circlip (3).

> **NOTE:**
> Ensure that the circlip engages properly in the groove.

- Coat sleeve (4) with Gleitmo 805 or Retinax A (2 g).
- Push the sleeve into the slider tube by hand.
- ightly grease the slider ring on the fixed tube and push the fixed tube into the slider tube, using a gentle rotating motion.

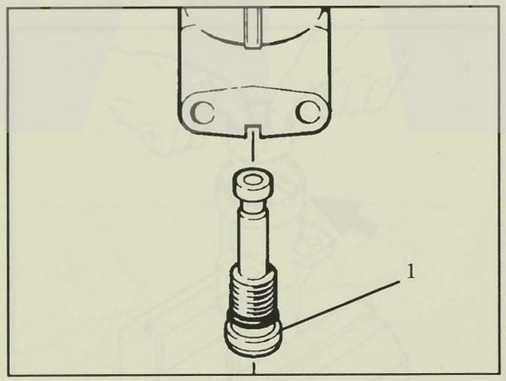

- Screw in the base valve (1) to connect damper and slider tube.

Tightening torque:

Base valve	*47 ± 3.5 Nm*

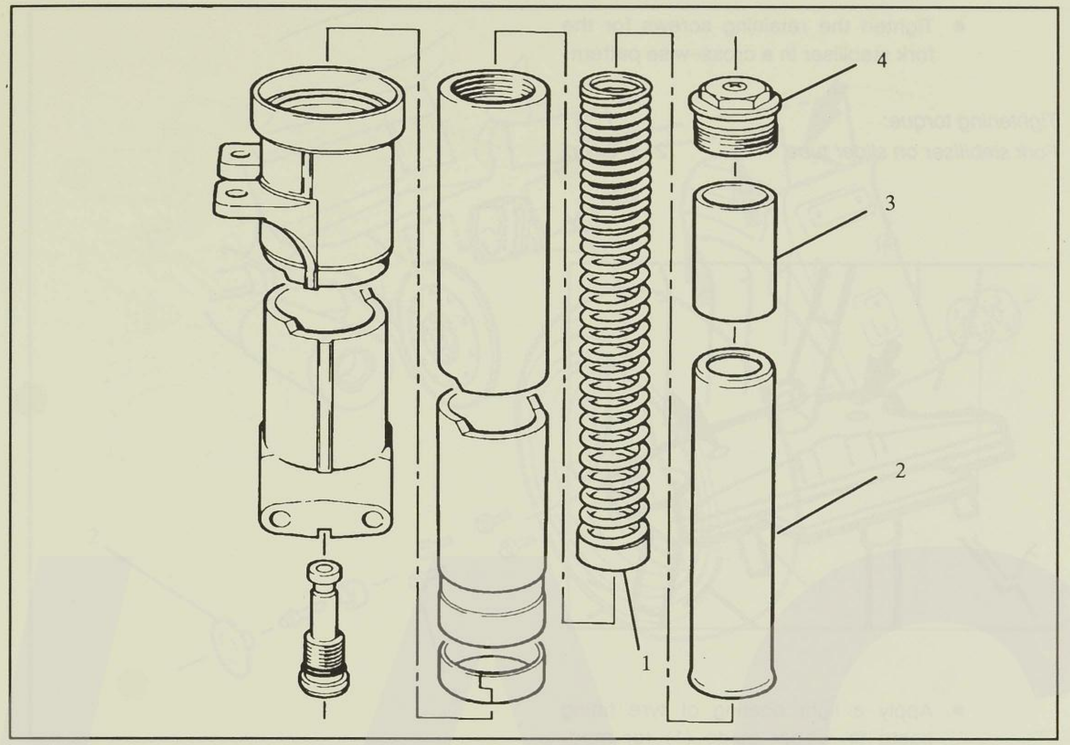

- Place slider tube vertically in vise.
- Insert coil spring into fixed tube with spring support (1) pointing downwards.
- Insert support tube (2) and spacer (3).
- Introduce fixed tube with slider tube through the lower fork bridge into the upper fork bridge.
- The fixed tube must protrude out of the upper fork bridge by 6 mm; the the quick—release axle must be easy to push in.
- Tighten the clamping screws to the specified torque.
- Tighten up the oil drain plug, fitting a new O-ring if necessary.

Tightening torque:

Clamp screws, top and base	*14.9 ± 0.2 Nm*
Oil drain plug	*20 ± 4 Nm*

- Fill fork with specified amount of oil.
- Use only approved oil grades, see Specifications.

Oil filling capacity per fork strut	*0.400 - 0.01 l*

- Screw in spring end plug (4) and tighten.

Tightening torque:

Spring end plug	*20 ± 2 Nm*
Oil drain plug	*14 ± 1.4 Nm*

- Fit front wheel and tighten machine screw for securing quick—release axle.
- Only tighten clamping screws on left initially.

Tightening torque:

Machine screw	*33 ± 4 Nm*
Clamp screw	*14 ± 2 Nm*

- Install fork stabiliser, fitting hex nuts only loosely.
- Fit brake calipers on left and right.

Tightening torque:

Machine screw	*32 ± 2 Nm*

- Remove the support from beneath the oil sump.
- Compress the fork several times and tighten the clamping screws on the right.

- Tighten the retaining screws for the fork stabiliser in a cross-wise pattern.

Tightening torque:
Fork stabiliser on slider tube *21 ± 2 Nm*

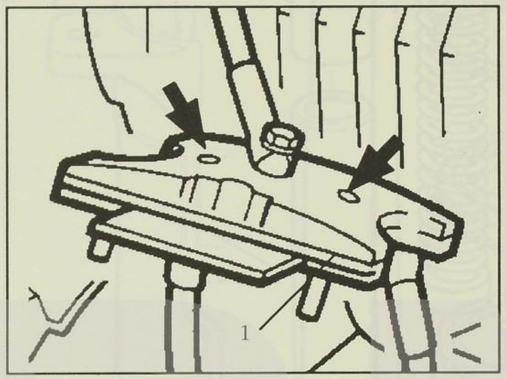

- Apply a light coating of tyre fitting paste to rubber guide (1) for mudguard in the fork stabiliser.
- Slacken off retaining screws (arrows) for fork stabiliser cover.
- Install mudguard and tighten.
- Tighten up fork stabiliser cover again.

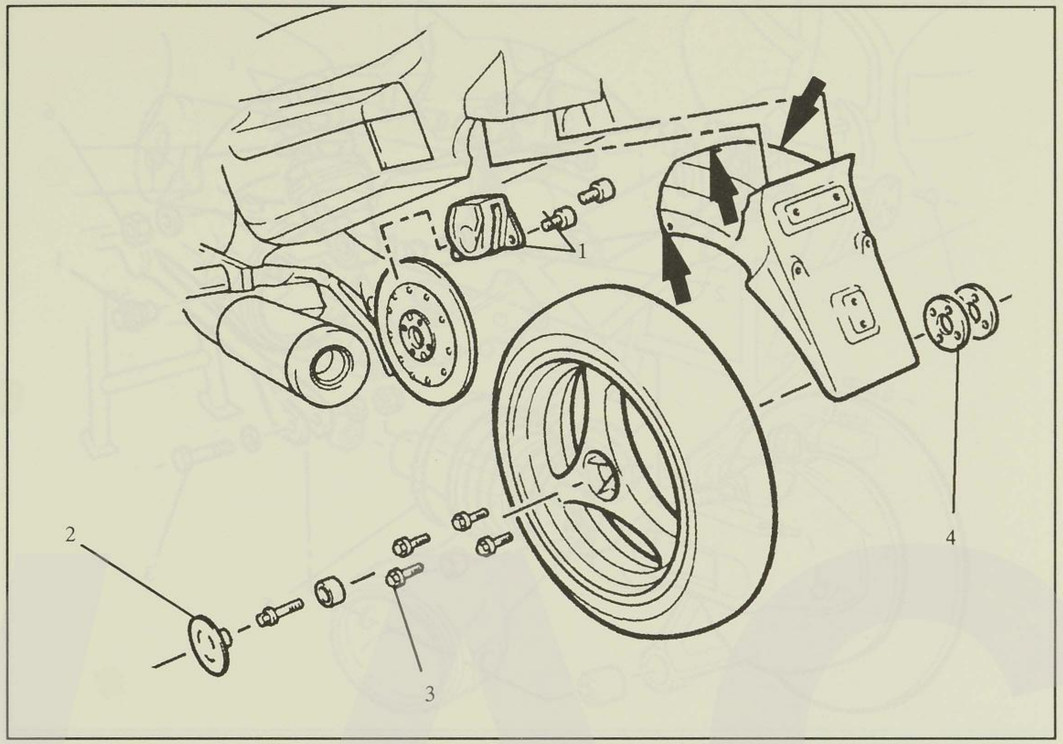

6.9 REMOVING REAR WHEEL

Removing licence plate mounting

- Take off dualseat.
- Remove 3 retaining screws (arrows) on the mudguard.
- Remove the retaining screws for the licence plate mounting on the rear section of the frame, from the side facing the wheel.
- Pull out the licence plate mounting.

Removing brake caliper

- Remove retaining screws (1) on final drive, take off brake caliper and hang over the footrest plate to keep clear.

Removing rear wheel

- Pull out cover cap (2) and remove retaining screws (3).
- Pull out rear wheel from between silencer and brake disc.
- Note that shims (4) are fitted.

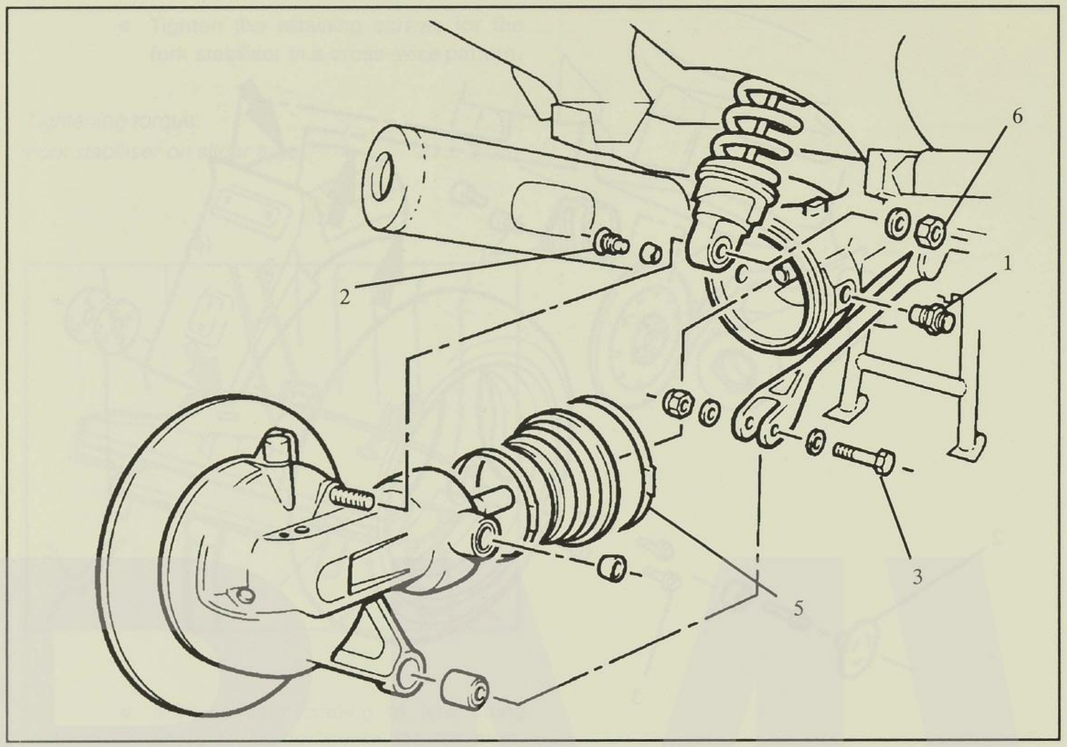

6.13 REMOVING, STRIPPING DOWN AND ASSEMBLING FINAL DRIVE

- Drain off oil from final drive.
- Remove rear wheel.

Removing final drive

- Slacken off the bearing pins (1) of the floating bearing.
- Heat up the bearing pins (2) of the fixed bearing and the area immediately around the pins to 150oC (measure with thermochrome pin), taking care not to heat the brake lines and fairing.
- Carefully unscrew bearing pin (2) and remove gently.
- Unscrew bearing pin (1).
- Note the inner races of the needle roller bearings.
- Remove the retaining screw for final drive strut (3).
- Remove spring strut mounting (6) and pull spring strut sideways off the stud bolt.
- Pull final drive off the driveshaft.

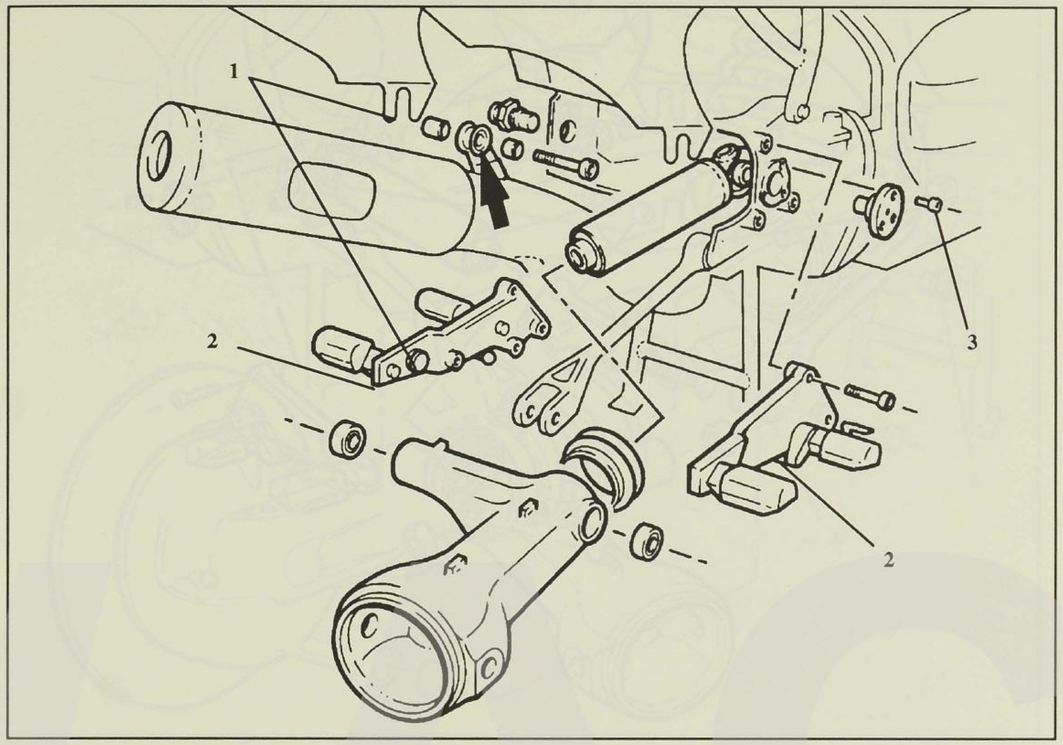

6.15 REMOVING REAR SWINGING ARM

- Remove mounting for silencer (arrow).
- Remove side fairing sections on either side at footrest plate (1).
- Remove footrest plates (2) on either side, noting the arrangement of the various spacers.
- Slacken off the lock nut of the left—hand bearing pin and unscrew the bearing pin.

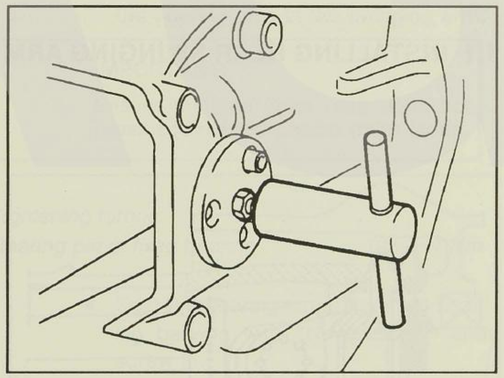

- Unscrew the retaining screws (3) for swinging-arm fixed bearing and remove two of the screws.
- Screw pulling-out device, BMW No. 26 1 660, into centre hole and counter—lock.
- Remove the third retaining screw and pull out the fixed bearing with a gentle rotating motion.
- Pull off the rubber sleeve with swinging arm at the gearbox and take out the swinging arm.

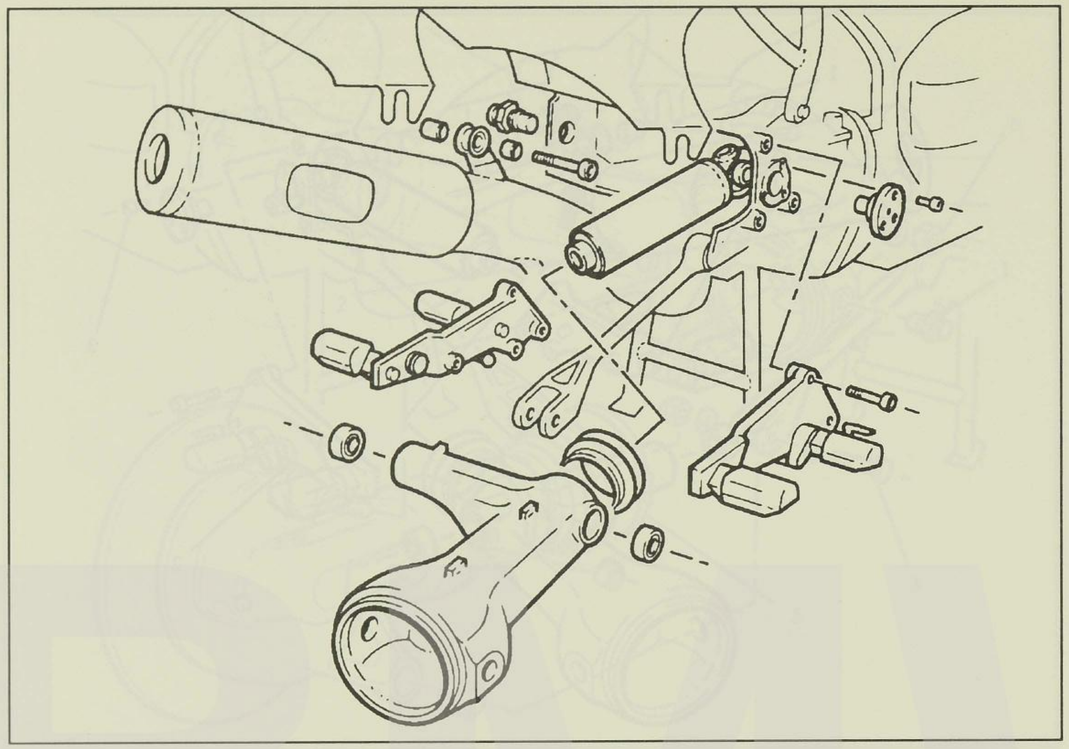

1.1 INSTALLING REAR SWINGING ARM

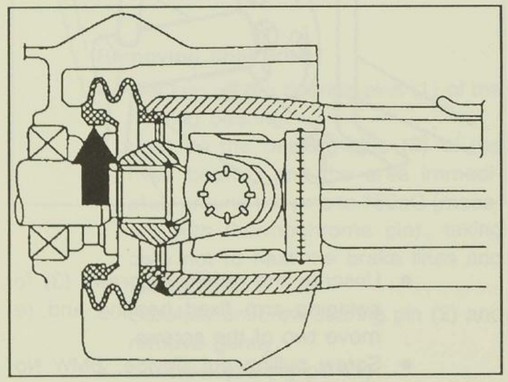

- Coat inside of gaiter (arrow) with "Staburags N3U PTM" paste or "Optimoly Paste PL".
- Push the swinging arm over the driveshaft and press against the gearbox so that the gaiter can engage on the neck of the gearbox.

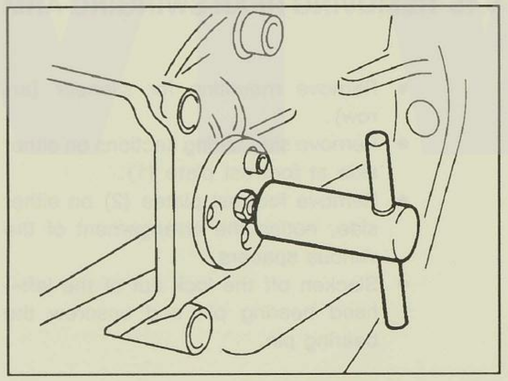

- Coat the bearing pin of the fixed bearing with "Never Seez"; insert and screw tight with BMW special tool No. 26 1 660.

Tightening torque:

Bearing pin on gearbox	*9 ± 1 Nm*

- Also insert and tighten up the bearing pin of the floating bearing.

Tightening torque:

Bearing pin	*7.5 ± 0.5 Nm*
Lock nut	*41 ± 3 Nm*

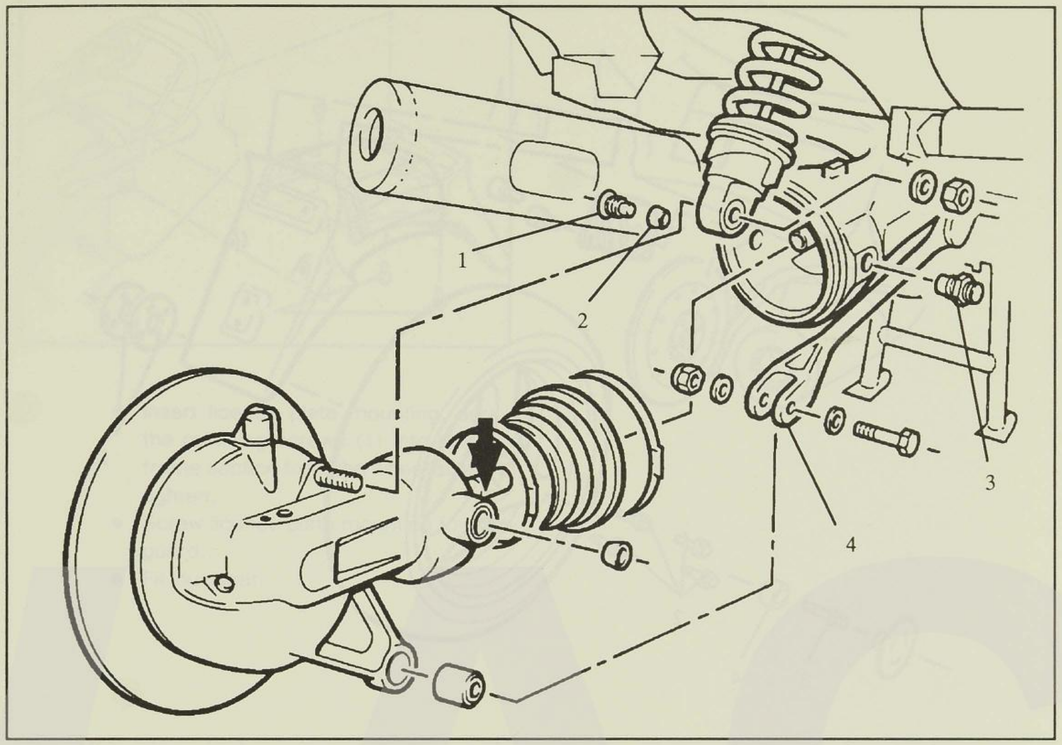

1.2 INSTALLING FINAL DRIVE

- Coat the splines of the final drive pivot section (arrow) with "Staburags NBU 30 PTM" or "Optimoly Paste PL".
- Insert the inner race of the right-hand needle roller bearing, coating with grease so that it does not fall out when the final drive is being installed.
- Offer up the final drive with gaiter to the swinging arm and introduce the pivot section into the driveshaft.
- Push the spring strut eye on to the stud bolt on the final drive, fit washer and screw the nut on loosely.

IMPORTANT:

The bearing pin (1) of the fixed bearing is micro-encapsulated and therefore cannot be re-used. The thread on the bearing pin and swinging arm must be cleaned.

- Coat the inside of the inner race (2) with "Never Seez" and fit on the fixed bearing pin. Apply a light coating of Loctite 273 to the threads and insert the bearing pins in the swinging arm.

IMPORTANT:

Ensure that the inner race does not press against the needle roller faces.

Tightening torque:

Bearing pin of fixed bearing	*105 ± 7 Nm*

- Coat the bearing pin of the front floating bearing with "Never Seez" and screw in.

Tightening torque:

Bearing pin of floating bearing	*7.3 ± 0.5 Nm*
Lock nut	*105 ± 7 Nm*

- Fit strut (4) and secure. The nut must be facing the wheel.

Tightening torque:

Strut to final drive	*33 ± 2 Nm*

- Push the rubber sleeve on to the swinging arm and tighten with tensioning tape.

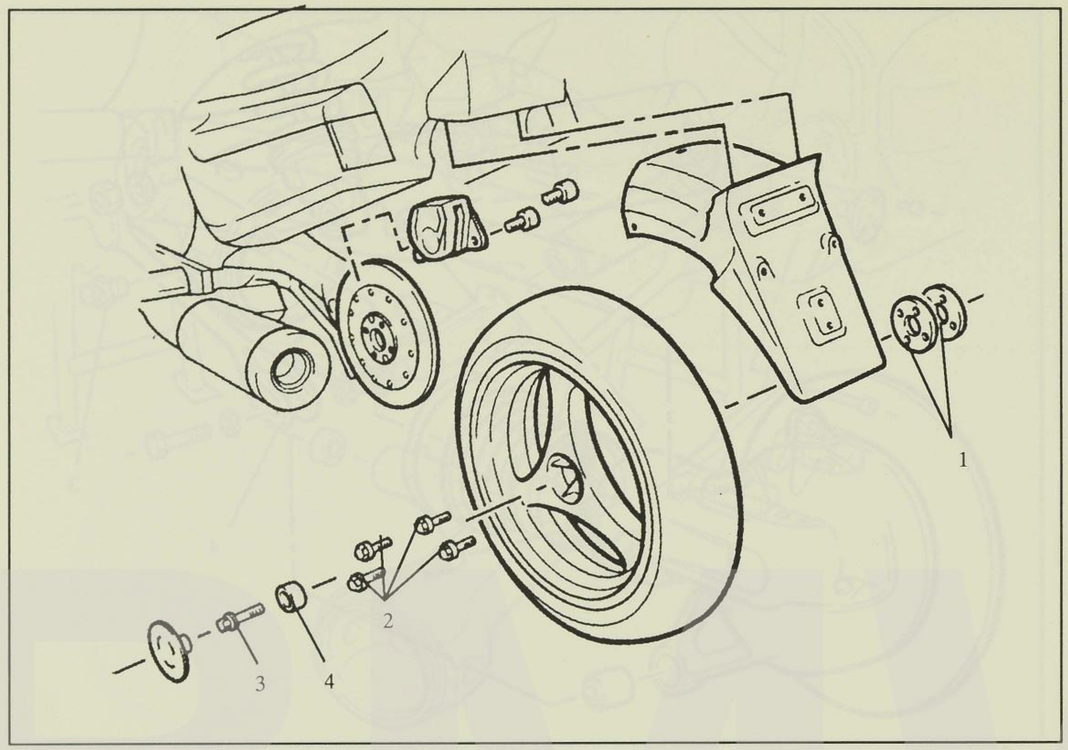

1.3 INSTALLING REAR WHEEL

- Fit shims (1) on centering shoulder on rear wheel.
- Insert rear wheel with centering flange in final drive.
- Screw in 4 studs for rear wheel (2) (Code 60 on head) together with tapered sleeve and tighten by hand.
- Tighten the outer screws in a cross—wise pattern to 50 Nm, then tighten the central pin to the specified tightening torque.
- Tighten the wheel studs to the specified tightening torque.

Tightening torque:

Provisional tightening torque	*50 Nm*
Wheel studs	*105 ± 7 Nm*

Installing brake caliper

- Force the brake pads slightly apart if necessary.
- Push the brake caliper down on to the brake disc and tighten.

Tightening torque:

Brake caliper on final drive	*32 ± 2 Nm*

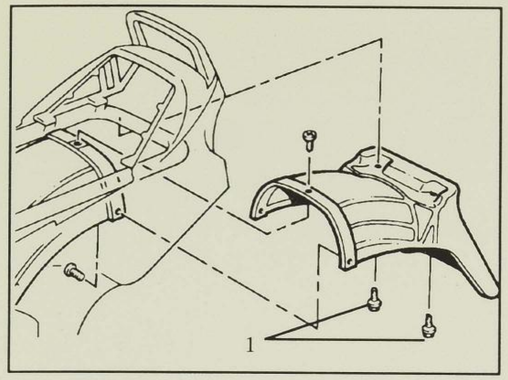

- Insert licence plate mounting, screw the retaining screws (1) into the rear frame section from the wheel side and tighten.
- Screw licence plate mounting to mudguard.
- Fit dualseat.